SEAT

Front Seat

COMPONENTS

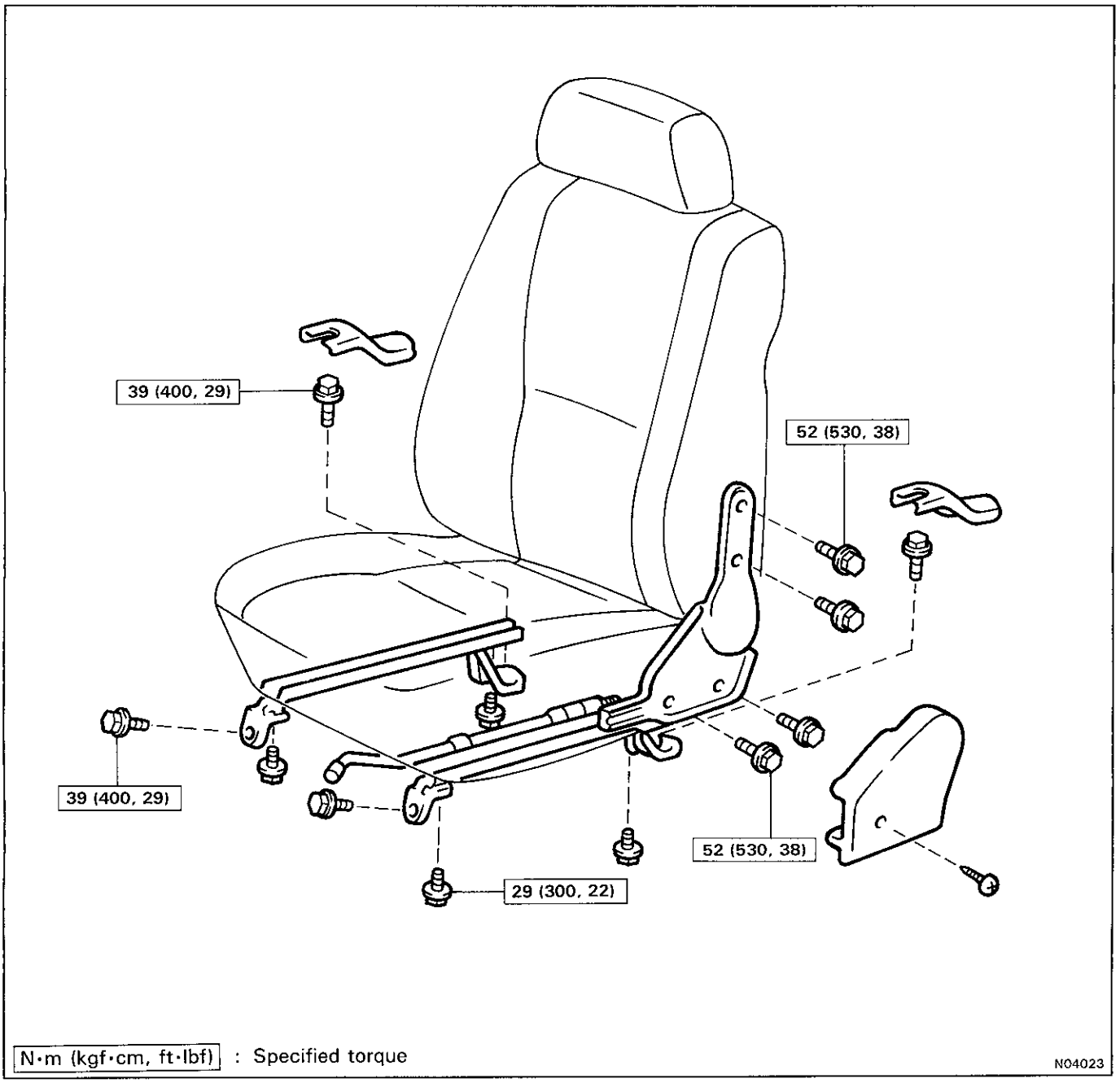

Second Seat

COMPONENTS

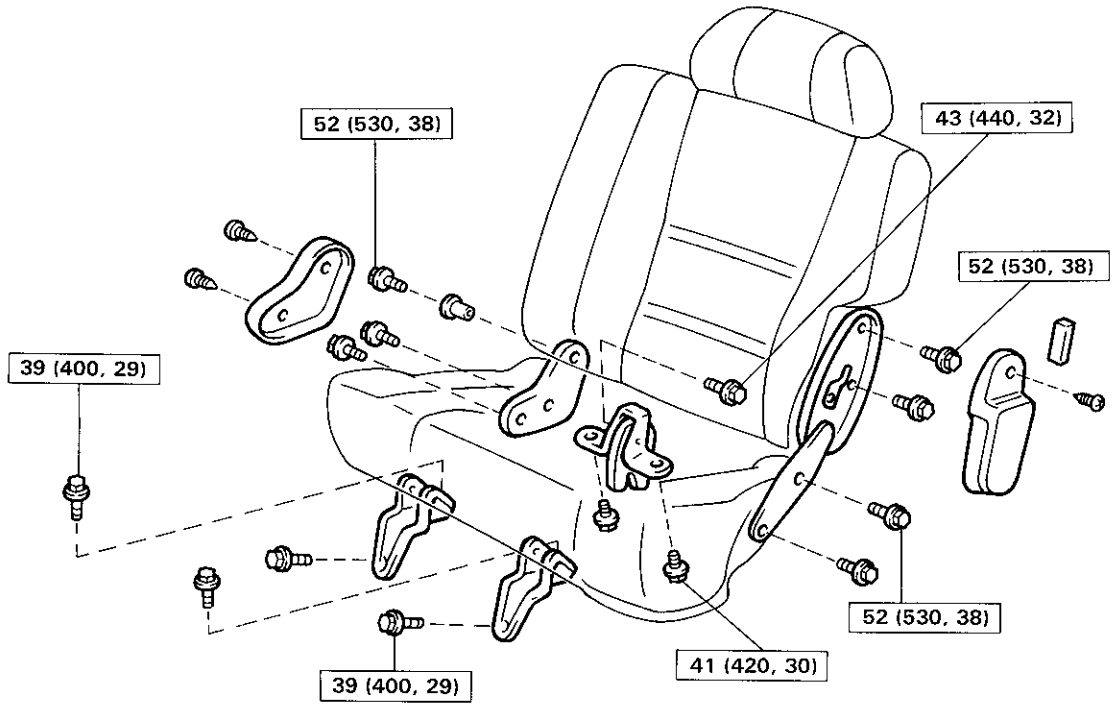

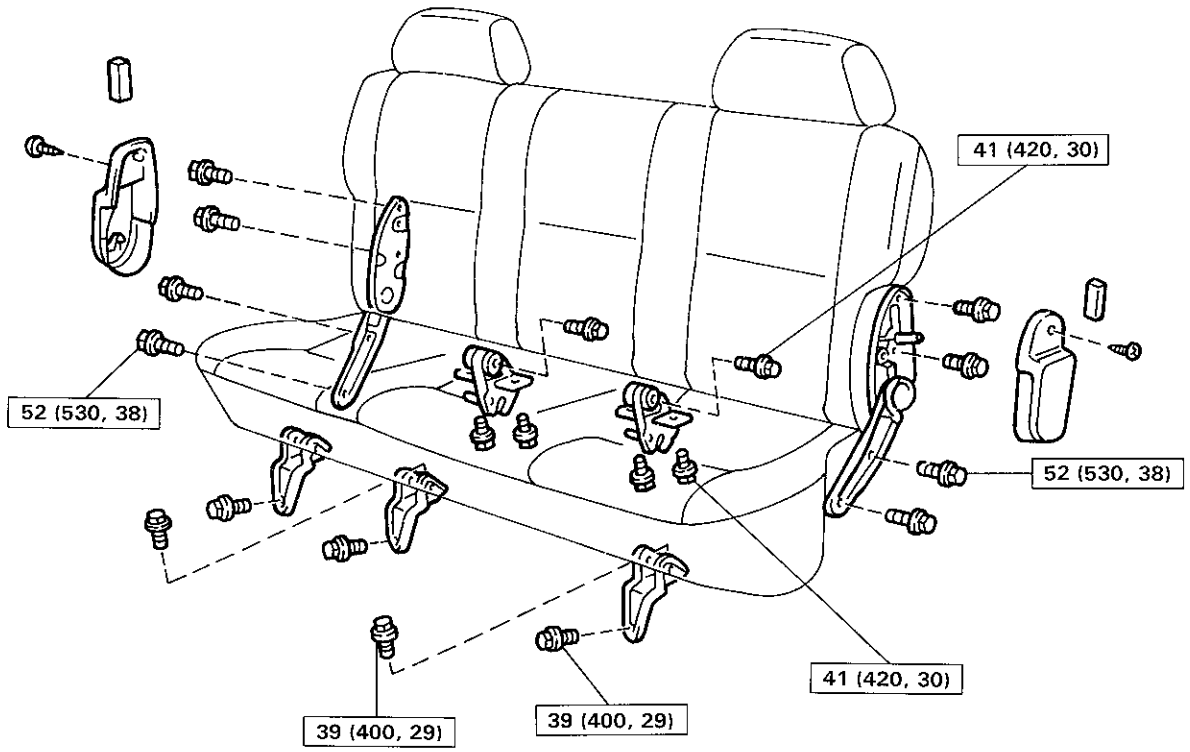

N·m (kgf·cm, ft·lbf) : Specified torque

N04024
N04025

Third Seat

COMPONENTS

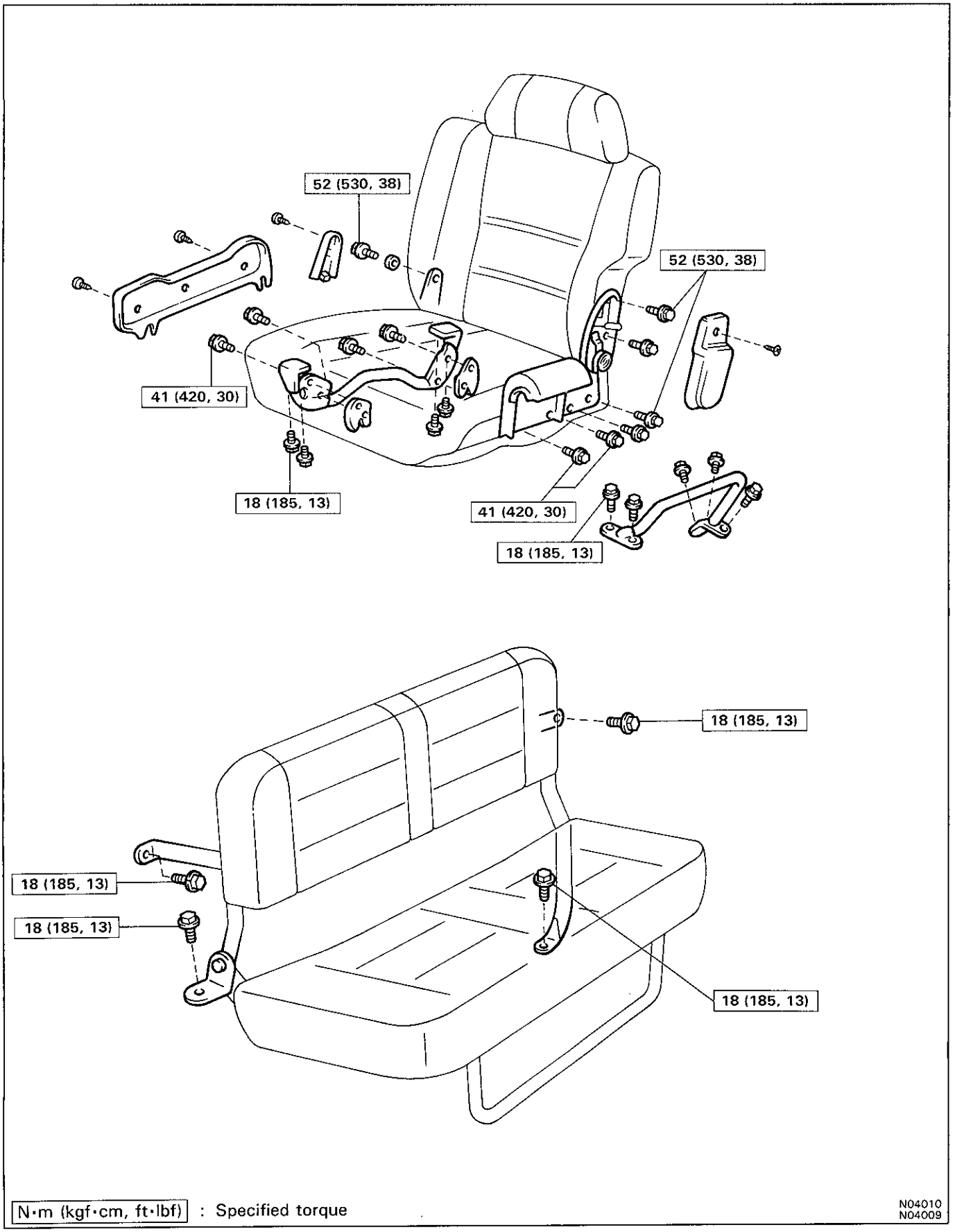

N·m (kgf·cm, ft·lbf) : Specified torque

N04010
N04009