SEAT BELTS

Front Seat Belts

COMPONENTS

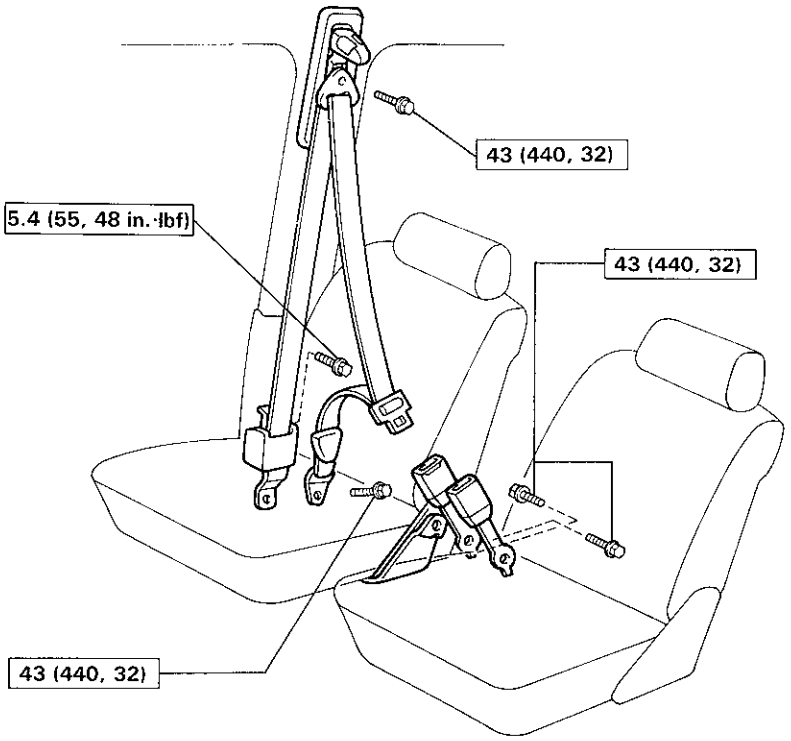

ELR Type
Separate Seat

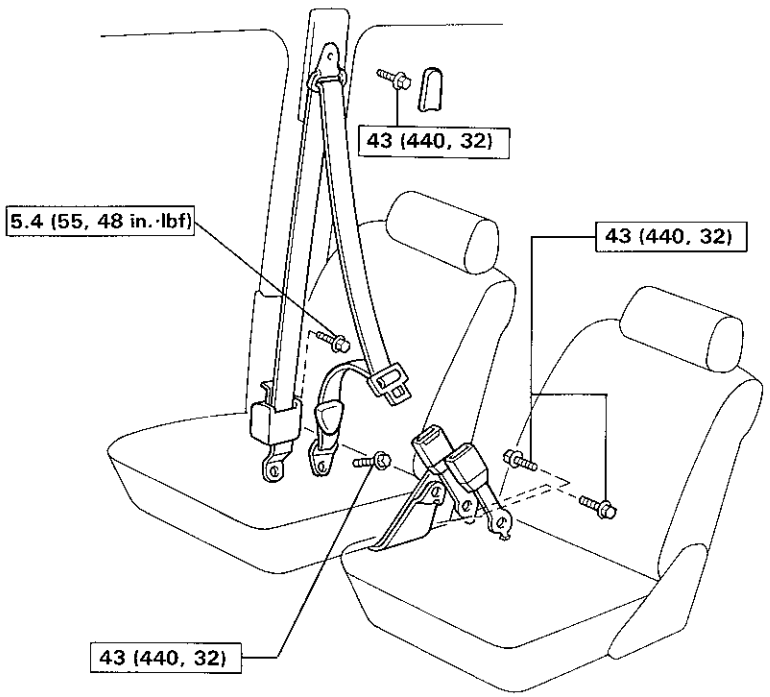

N·m (kgf·cm, ft·lbf) : Specified torque

N04008
BO5212

Second Seat Belts

COMPONENTS

ELR and Manual Type

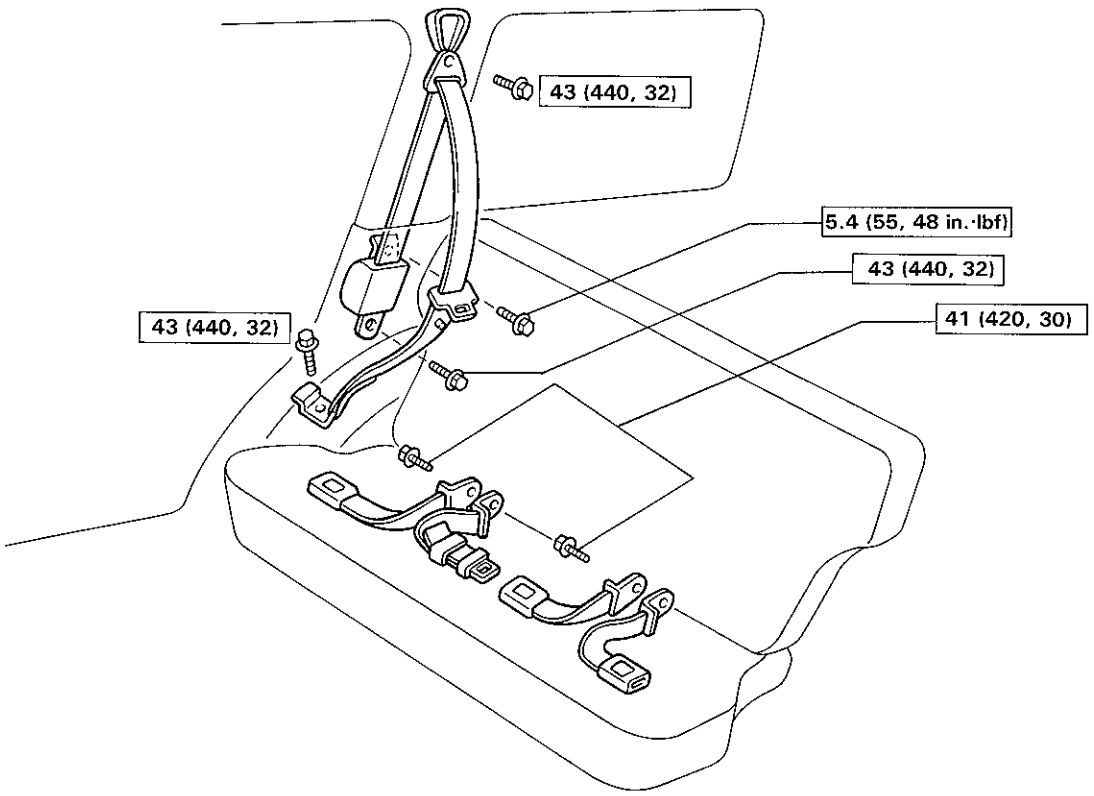

Manual Type

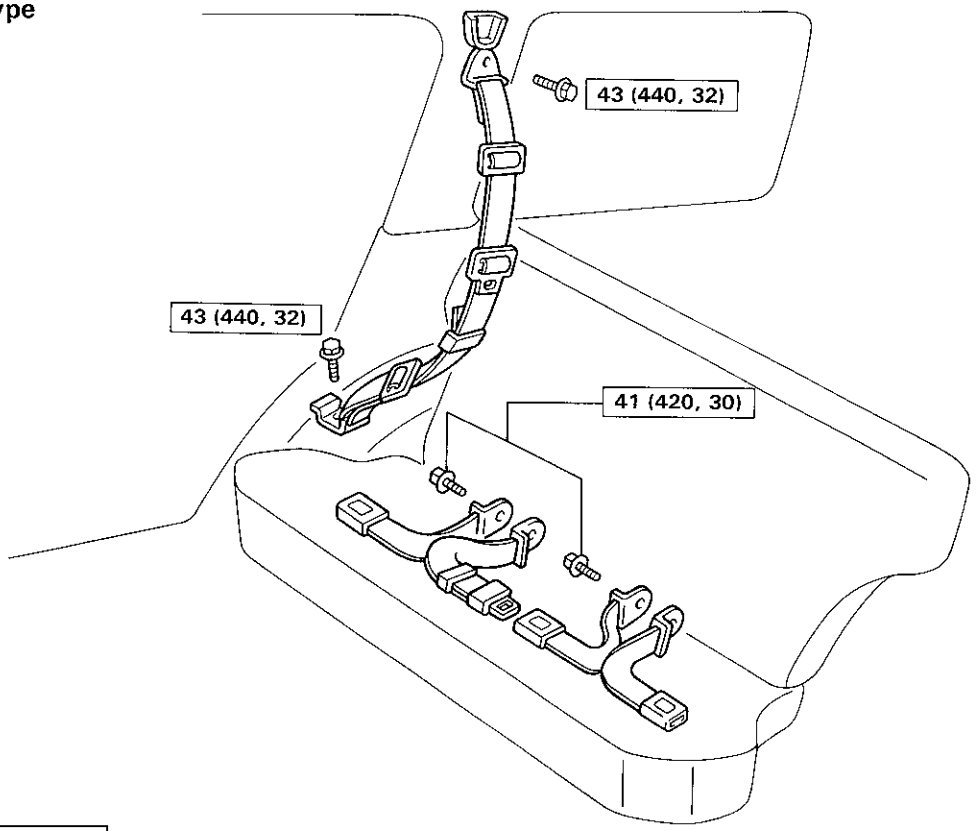

N·m (kgf·cm, ft·lbf) : Specified torque

BO5643
BO5209

COMPONENTS (Cont'd)

Manual Type

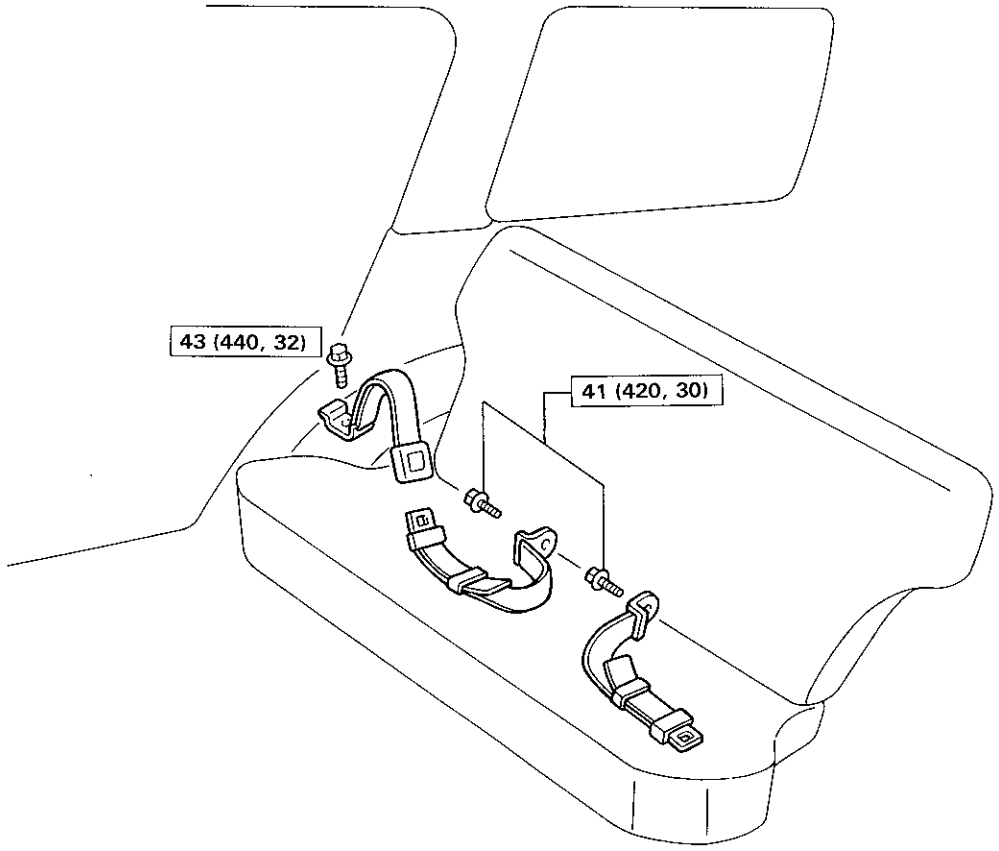

N·m (kgf·cm, ft·lbf) : Specified torque

N05207