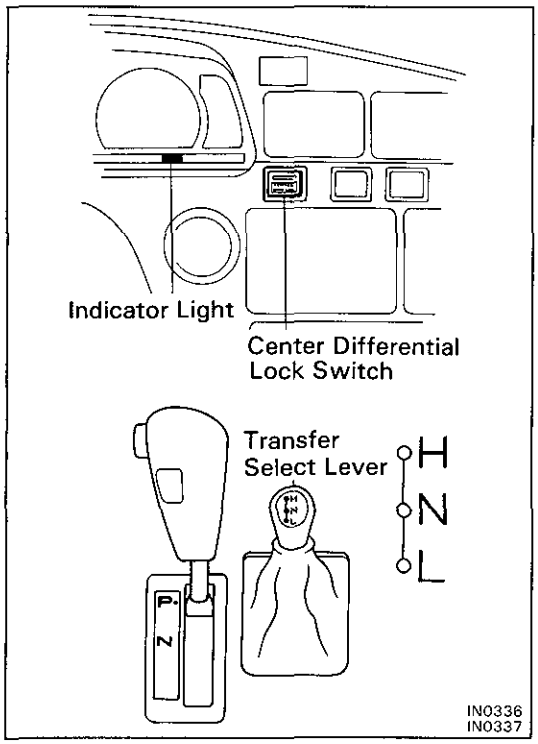

PRECAUTIONS WHEN SERVICING FULL-TIME 4WD VEHICLES

(Station Wagon)

The full-time 4WD Land Cruiser Station Wagon is equipped with the mechanical lock type center differential system. When carrying out any kind of servicing or testing on a full-time 4WD in which the front or rear wheels are made to rotate (braking test, speedometer test, on-vehicle wheel balancing, etc.), or when towing the vehicle, be sure to observe the precautions given below. If incorrect preparations or test procedures are used, the test cannot be successfully carried out, and may be dangerous as well. Therefore, before beginning any such servicing or test, be sure to check the following items:

(1) Center differential lock type

(2) Center differential mode position (FREE or LOCK)

(3) Whether wheels should be touching ground or jacked up

(4) Transmission gear position

(5) Transfer gear position (H or L)

(6) Maximum testing vehicle speed

(7) Maximum testing time

Also be sure to observe the following cautions:

(1) Never accelerate or decelerate the vehicle suddenly.

(2) Observe the other cautions given for each individual test.

BEFORE BEGINNING TEST

During tests with a brake tester or chassis dynamometer, such as braking force tests or speedometer tests, if only the front or rear wheels are to be rotated, it is necessary to set the position of the center differential to the FREE position or to the LOCK position depending on the type of test being performed.

(1) Select the position of the center differential by pushing the center differential lock switch with the transfer select lever to "H" position.

(2) After selecting the position, confirm the operation of indicator light.

HINT:

- Move the vehicle backward or forward slightly if the indicator light does not operate correctly when the center differential lock switch is turned ON or OFF.
- When the transfer select lever is put in "L" position, the center differential is put in LOCK condition regardless of the position of the center differential lock switch.
- Transfer gear H ↔ L gear shifting procedure

  Automatic transmission:
  When shifting, always put the shift lever of the automatic transmission in P or N range. In other ranges, the gears of the transfer clash, and switching cannot occur.

  Manual transmission:
  When shifting, always put the shift lever of the manual transmission in neutral.

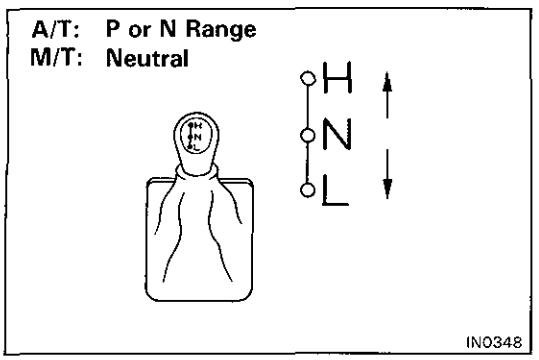

CAUTIONS WHEN CENTER DIFFERENTIAL CONTROL SWITCH IS TURNED ON

- Operate the switch only when all four wheels are stopped or when driving with the wheels in a straight line.
- Never operate the switch under the following conditions.
  (1) When any tire is slipping.
  (2) When any tire is spinning freely.
  (3) When swerving or cornering.

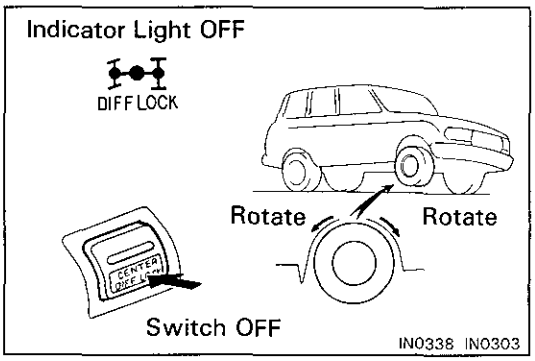

FREE Position

Center Differential Lock		Transfer Select Lever	Wheel
Control Switch	Indicator Light		
OFF	OFF	H	A lifted wheel can be rotated even if only one wheel is lifted up, as long as transmission is in neutral or N range.

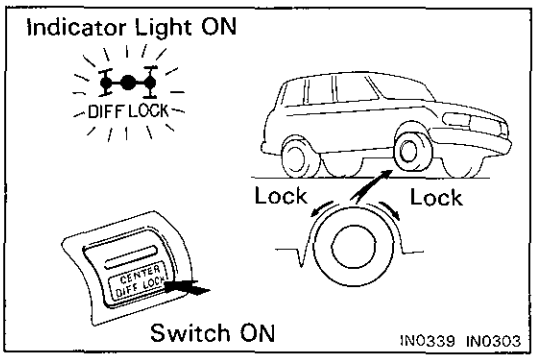

LOCK Position

Center Differential Lock		Transfer Select Lever	Wheel
Control Switch	Indicator Light		
ON	ON	H	A lifted wheel cannot be rotated if only one wheel is lifted up, even if transmission is in neutral or N range.
OFF	ON	L	

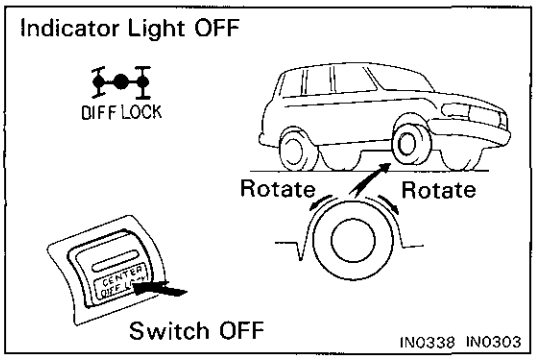

BRAKING FORCE TEST (Vehicle Speed : Below 0.5 km/h or 0.3 mph)

When performing low-speed type brake tester measurements, observe the following instructions.

(1) Put the center differential in FREE position.
- Shift the transfer select lever to H position.
- Turn the center differential lock switch to OFF and check that the center differential lock indicator light goes off.

(2) Shift the transmission shift lever to N range.

(3) Idle the engine, operate the brake booster and perform the test.

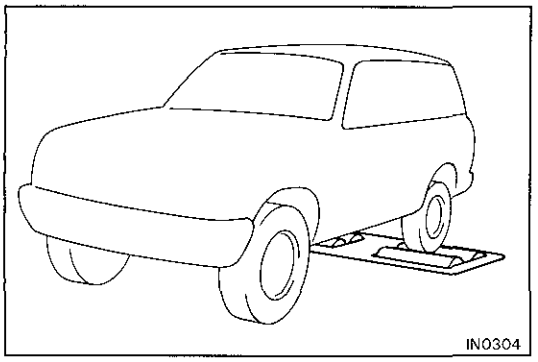

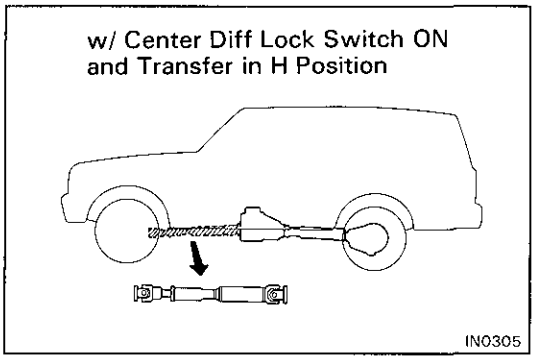

SPEEDOMETER TEST OR OTHER TESTS (Using Speedometer Tester or Chassis Dynamometer)

(1) Remove the front propeller shaft, put the center differential in LOCK position, then put the rear wheels on the tester roller and perform the test.

(2) When performing tests, observe the following precautions.
- Check that the center differential is securely in LOCK condition.
- Confirm that the vehicle is securely immobilised.
- Never operate the clutch or brakes suddenly, suddenly drive the wheels, or suddenly decelerate.

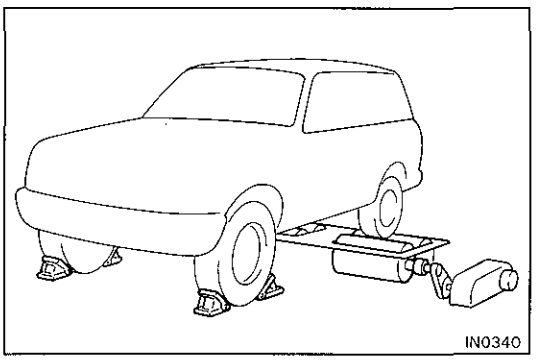

ON-VEHICLE WHEEL BALANCING

When doing on-vehicle wheel balancing on a full-time 4WD vehicle, to prevent the wheels from rotating at different speeds or in different directions from each other (which could lead to damage to the center differential or transfer gears), always be sure to observe the following precautions:

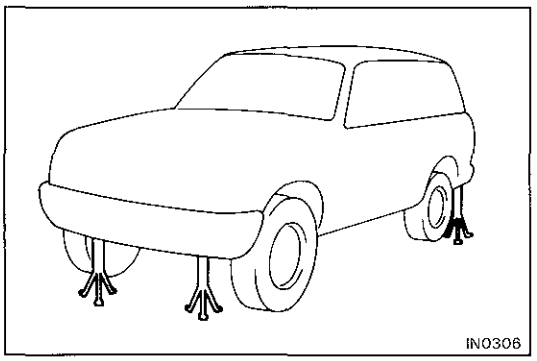

(1) All four wheels should be jacked up, clearing the ground completely.

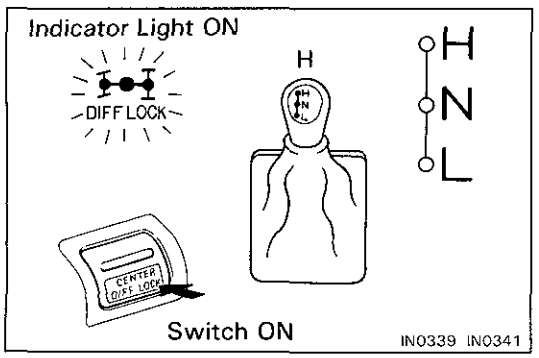

(2) The center differential should be in the LOCK position with the transfer gear in H position.

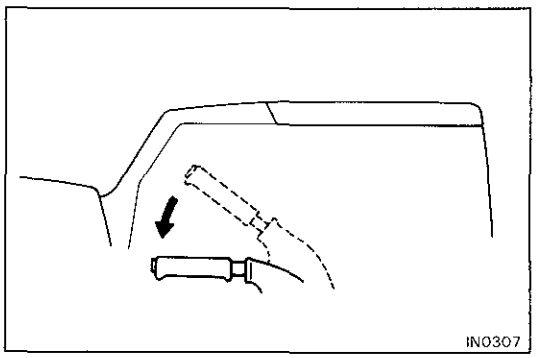

(3) The parking brake lever should be fully released.

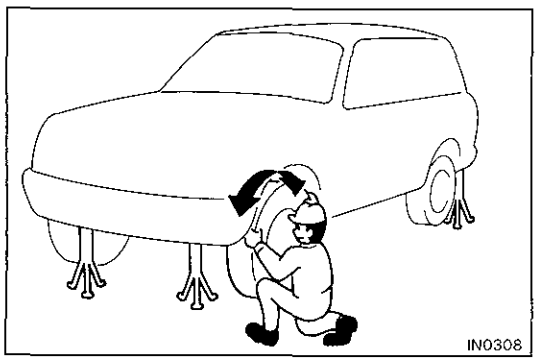

(4) None of the brakes should be allowed to drag.

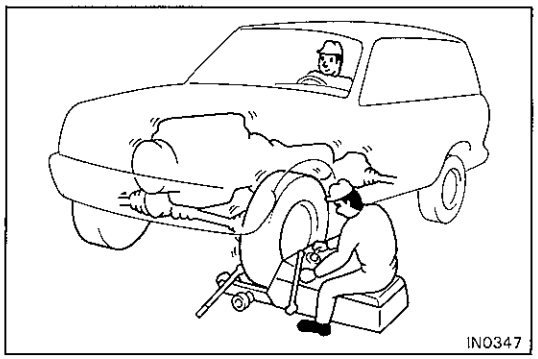

(5) The wheels should be driven with both the engine and the wheel balancer.

HINT: When doing this be careful of the other wheels, which will rotate at the same time.

(6) Avoid sudden acceleration, deceleration and braking.

(7) Carry out the wheel balancing with the transmission in 3rd or 4th gear (or 3rd or D range).