VEHICLE LIFT AND SUPPORT LOCATIONS (Hardtop & Canvas Top)

Coil Spring Type (LJ and RJ series)

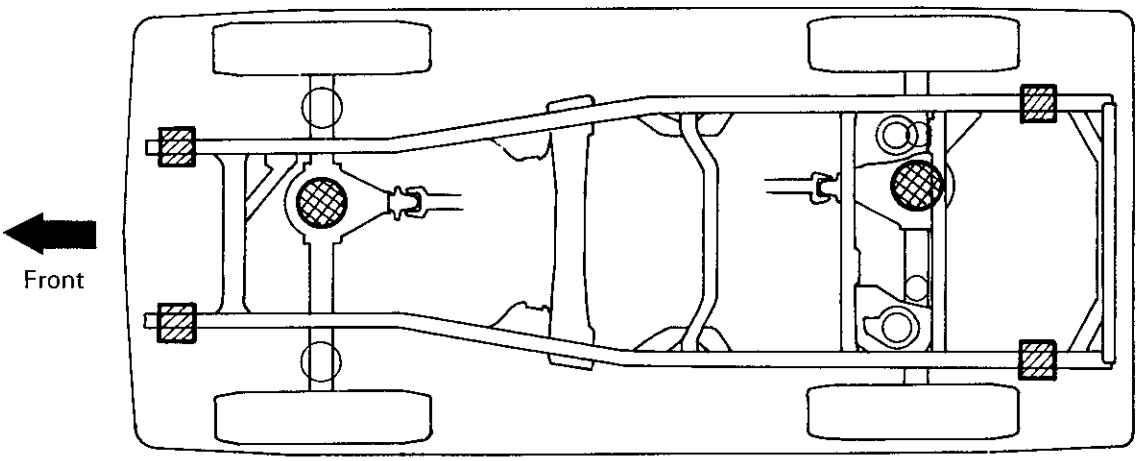

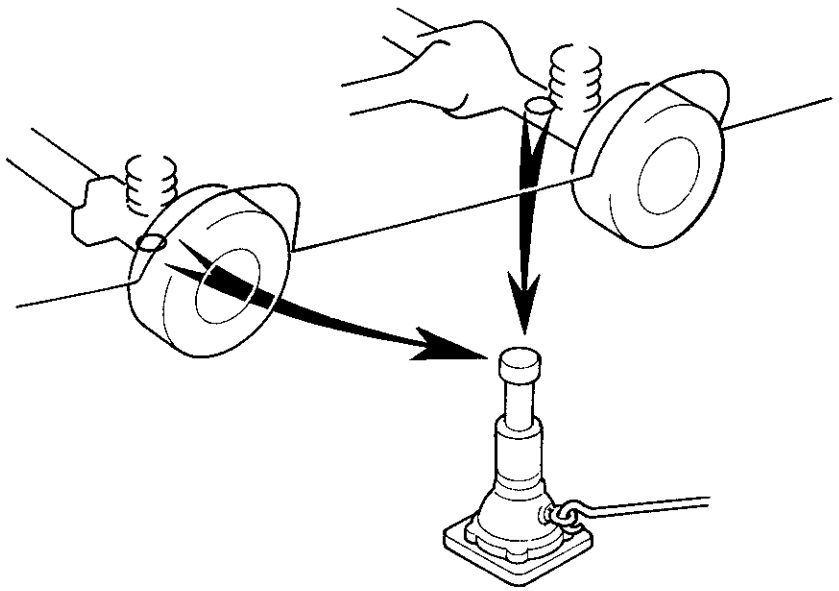

JACK POSITION ——————————

Front ..... Under the front differential
Rear ..... Under the rear differential

SUPPORT POSITION

Safety stand .....

SCREW TYPE JACK POSITION .....

IN0040
IN0352

Leaf Spring Type (PZJ, HZJ, FJ and FZJ series)
70 series (short) and 73 series (middle)

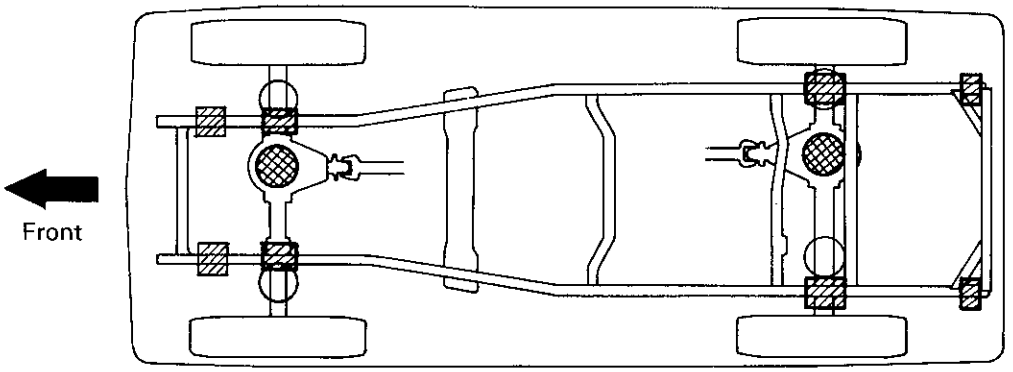

75 series (long)

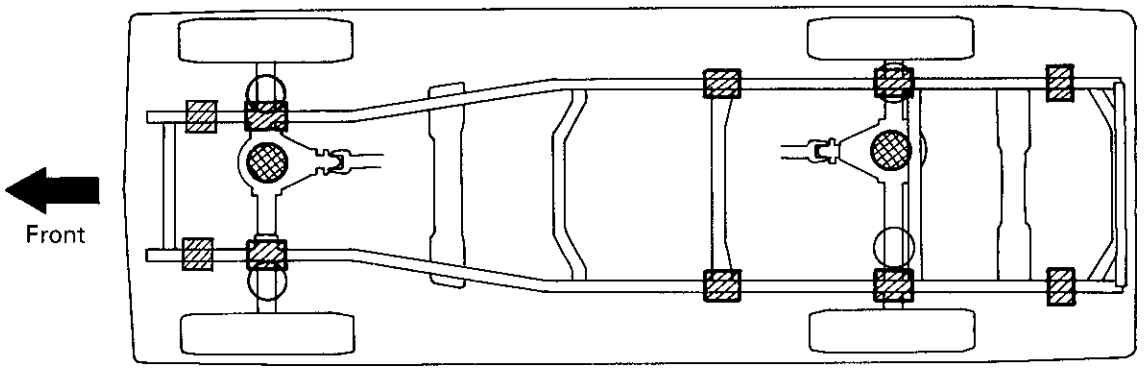

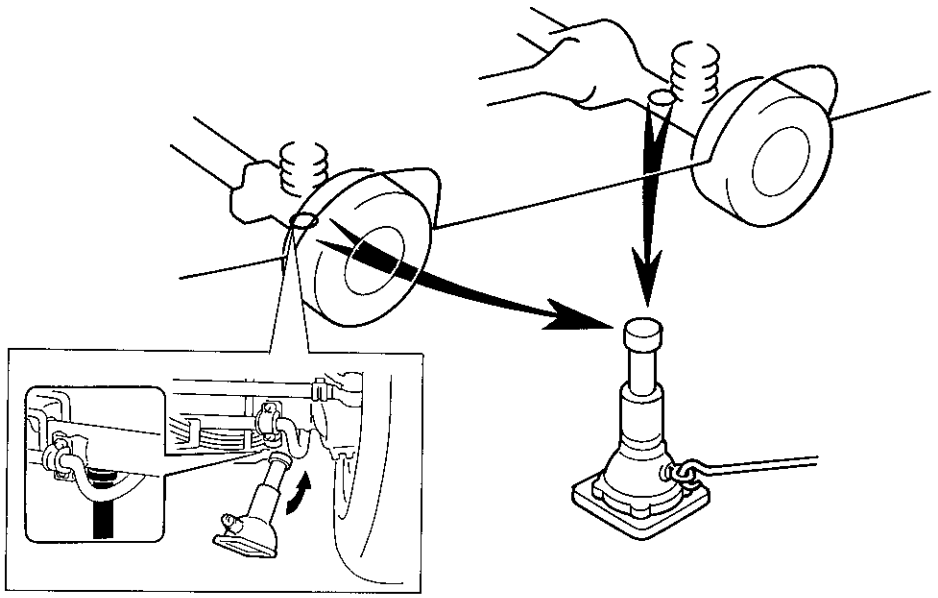

JACK POSITION

Front ..... Under the front differential
Rear ..... Under the rear differential

SUPPORT POSITION

Safety stand .....

SCREW TYPE JACK POSITION .....

IN0043
IN0044
IN0352 IN0346