VEHICLE LIFT AND SUPPORT LOCATIONS
(Station Wagon)

Front

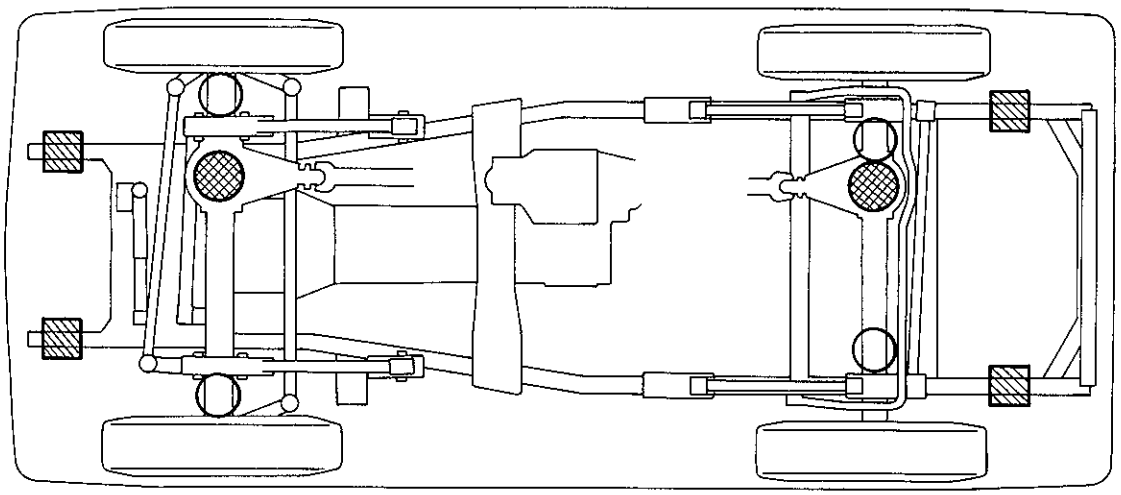

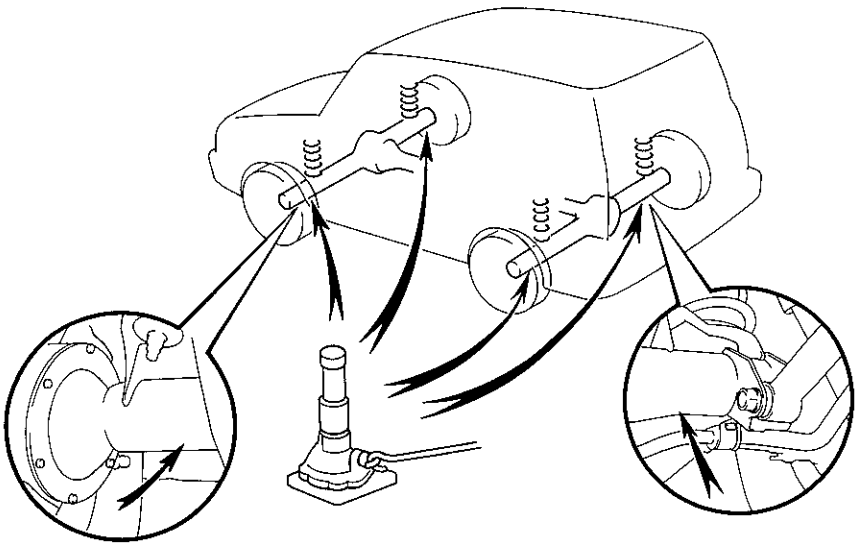

JACK POSITION

Front ..... Under the front differential
Rear ..... Under the rear differential

SCREW TYPE JACK POSITION

SUPPORT POSITION

Safety stand .....

IN0314
IN0342