GENERAL DESCRIPTION

When working with FIPG material, you must be observe the following.

- Using a razor blade and gasket scraper, remove all the old packing (FIPG) material from the gasket surfaces.
- Throughly clean all components to remove all the loose material.
- Clean both sealing surfaces with a non-residue solvent.
- Apply the seal packing in approx. 1 mm (0.04 in.) bead along the sealing surface.
- Parts must be assembly within 10 minutes of application. Otherwise, the packing (FIPG) material must be removed and reapplied.

DESCRIPTION

- The H151F manual transmission is a three-shaft type, having an input shaft, output shaft and counter gear. Power is transmitted from the input shaft to the counter gear, and then to the output shaft which is co-axially fitted to the input shaft. The input shaft and the output shaft are engaged directly to each other in the 4th gear position.
- A triple-cone type synchromesh mechanism is used in the H151F type for the 1st to 3rd gears to reduce the shifting force required.

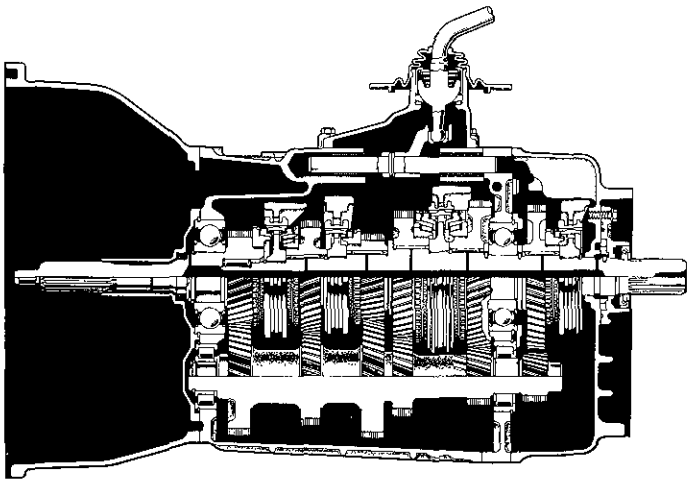

HM0521

Type of Transmission / Type of Engine / Item		H151F
		IHD-T, IFZ-F
Gear Ratio	1st	4.081
	2nd	2.294
	3rd	1.490
	4th	1.000
	5th	0.881
	Reverse	4.313
Oil Capacity		2.6 liters (2.7 US qts., 2.3 Imp. qts)
Oil Viscosity		SAE 75W-90
Oil Grade		API GL-4 or GL-5