COMPONENT PARTS REMOVAL

COMPONENTS

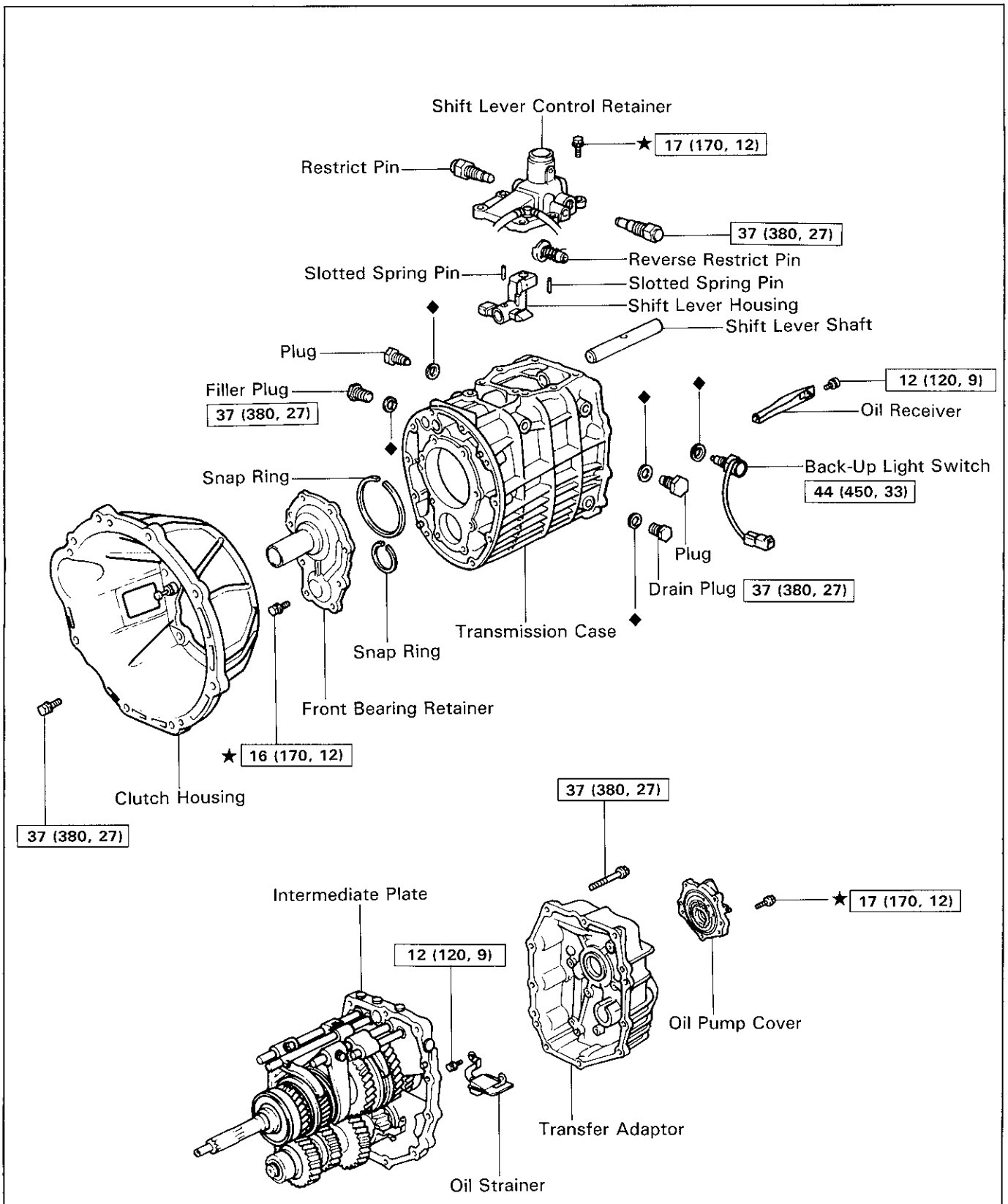

N·m (kgf·cm, ft·lbf) : Specified torque
◆ Non-reusable part
★ Precoated part

X5146

COMPONENTS (Cont'd)

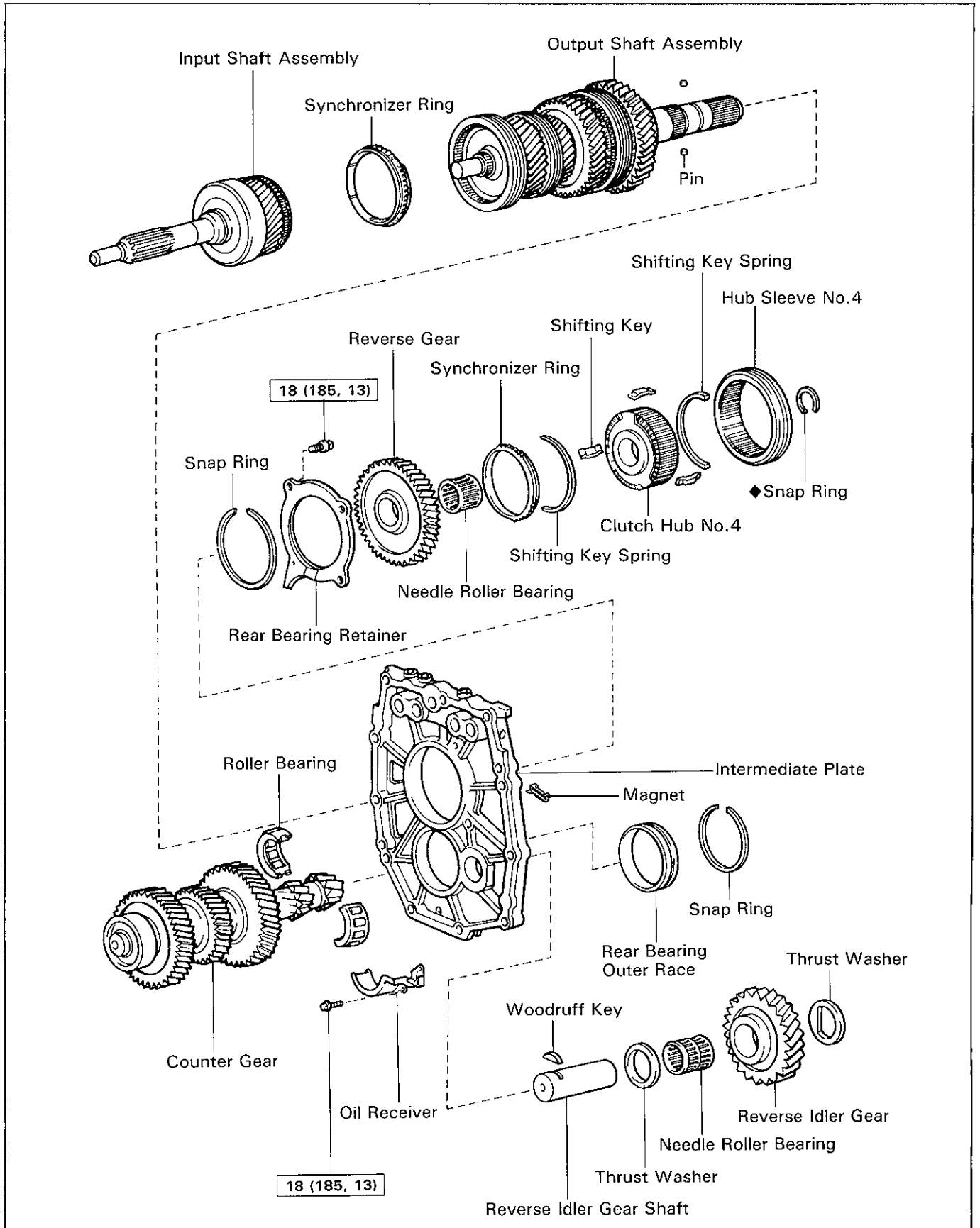

N·m (kgf·cm, ft·lbf) : Specified torque

◆ Non-reusable part

X5128

COMPONENTS (Cont'd)

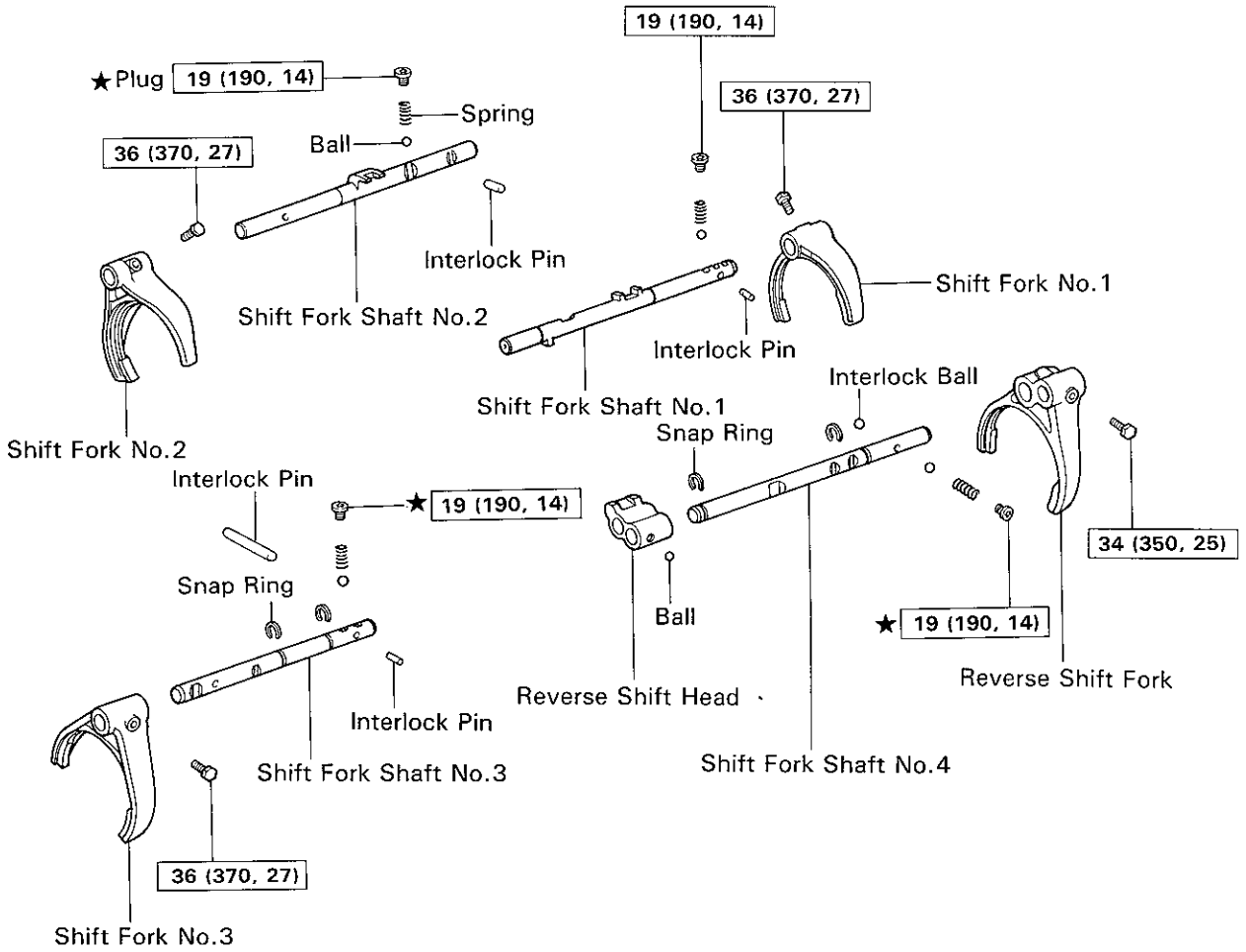

N·m (kgf·cm, ft·lbf) : Specified torque

◆ Non-reusable part

HM0341

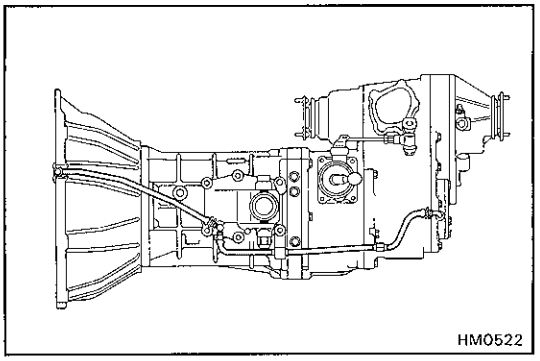
HM0522

BASIC SUBASSEMBLY SEPARATION

(See pages MT-5 to 7)

1. **REMOVE BREATHER HOSE**

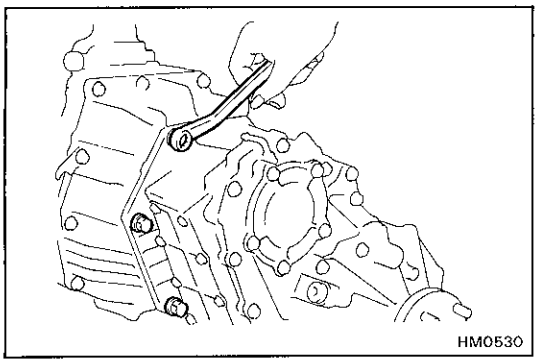
HM0530

2. **REMOVE TRANSFER**

   Remove the six bolts and transfer from the transfer adaptor.

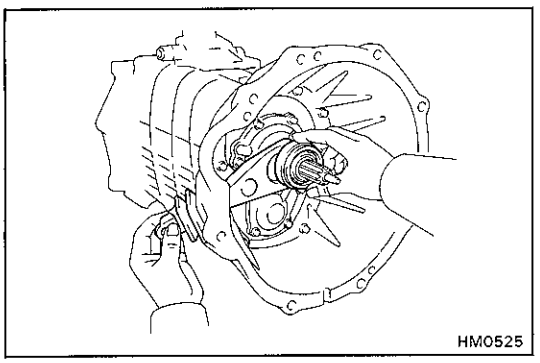
HM0525

3. **REMOVE RELEASE FORK AND BEARING**
4. **REMOVE BACK-UP LIGHT SWITCH**

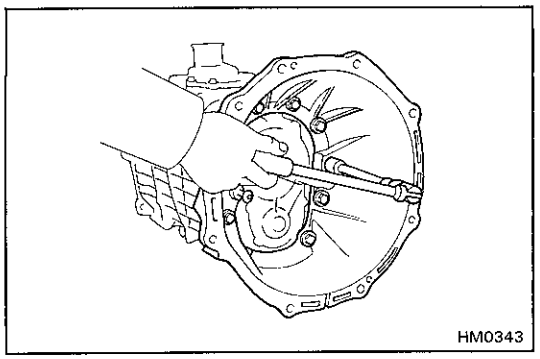
HM0343

5. **REMOVE CLUTCH HOUSING FROM TRANSMISSION CASE**

   Remove the ten bolts and clutch housing.

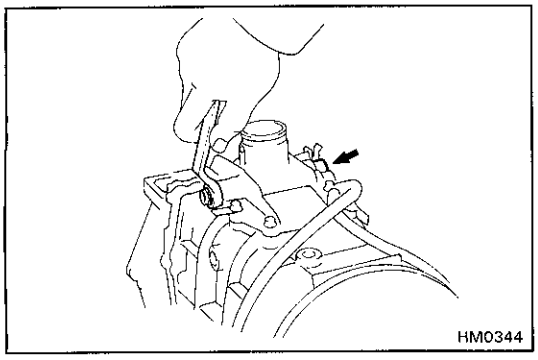
HM0344

6. **REMOVE TWO RESTRICT PINS**
7. **REMOVE BREATHER HOSE**

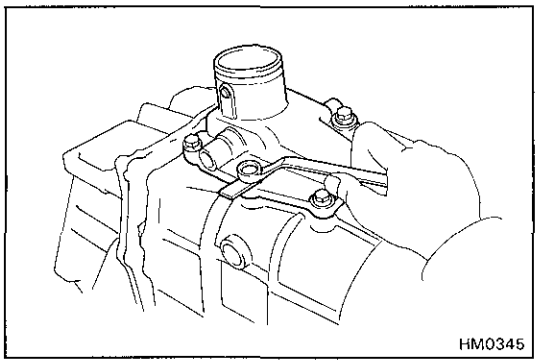
HM0345

8. REMOVE SHIFT LEVER CONTROL RETAINER

Remove the six bolts and transmission shift lever control retainer.

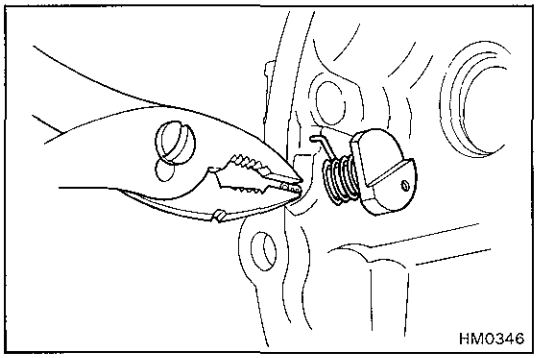
HM0346

9. REMOVE REVERSE RESTRICT PIN

(a) Using pliers, remove the slotted spring pin.

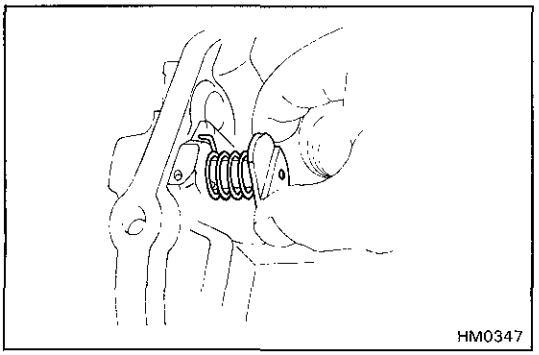
HM0347

(b) Remove the reverse restrict pin.

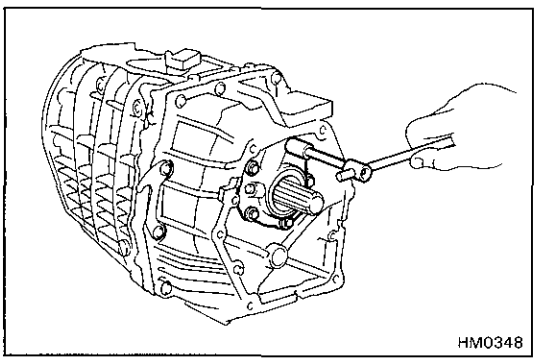
HM0348

10. REMOVE OIL PUMP COVER ASSEMBLY

(a) Remove the five bolts and oil pump cover.

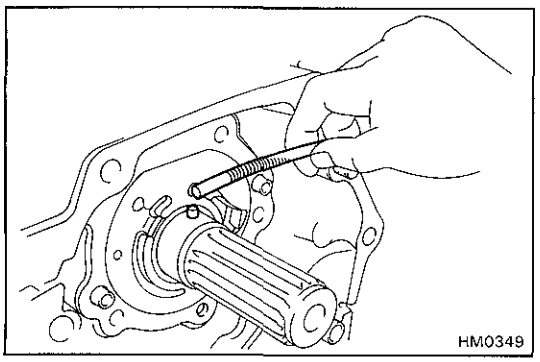
HM0349

(b) Using a magnetic finger, remove the two straight pins.

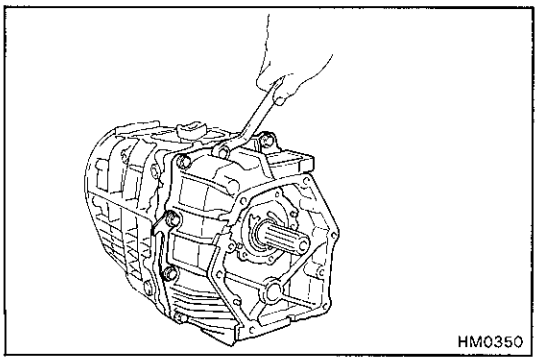

11. REMOVE TRANSFER ADAPTOR

Remove the eleven bolts.

HINT: If necessary, tap the transfer adaptor with a plastic hammer.

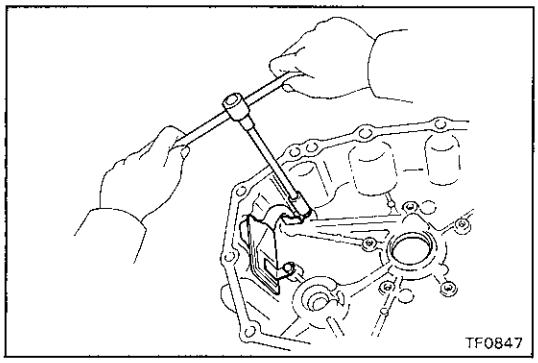

12. REMOVE OIL STRAINER FROM TRANSFER ADAPTOR

Remove the two bolts and oil strainer.

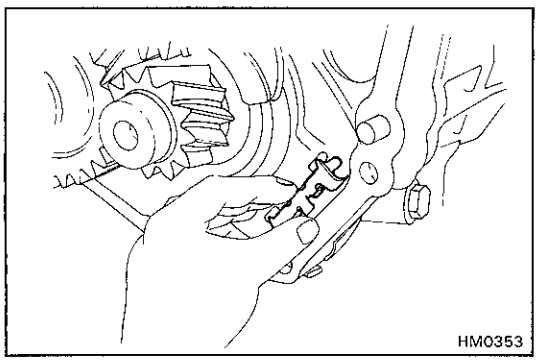

13. REMOVE MAGNET FROM INTERMEDIATE PLATE

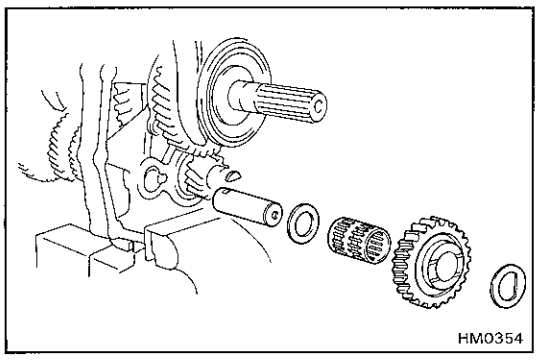

14. REMOVE REVERSE IDLE GEAR FROM INTERMEDIATE PLATE

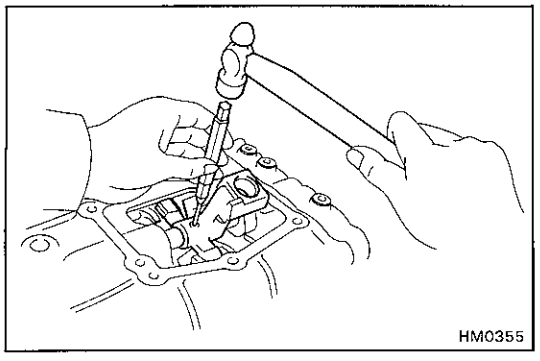

15. REMOVE SHIFT LEVER SHAFT AND SHIFT LEVER HOUSING

(a) Using a pin punch and a hammer, drive out the slotted spring pin from the shift lever housing.

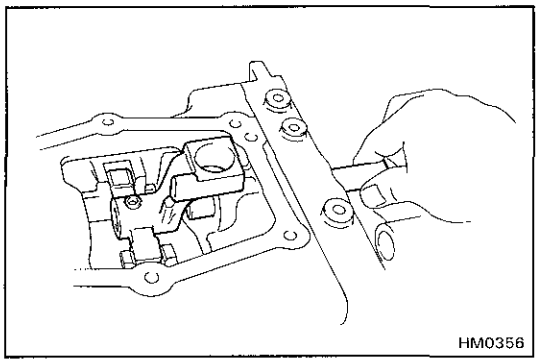

(b) Remove the shift lever shaft and shift lever housing.

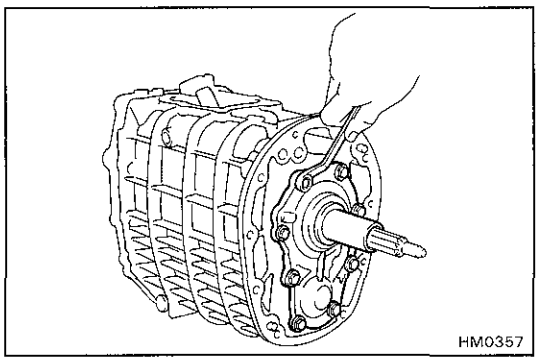

16. REMOVE FRONT BEARING RETAINER

(a) Remove the eight bolts, and front bearing retainer.

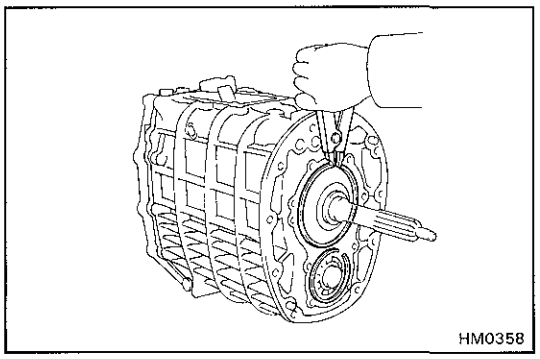

(b) Using a snap ring expander, remove the two snap rings from the input shaft and counter gear.

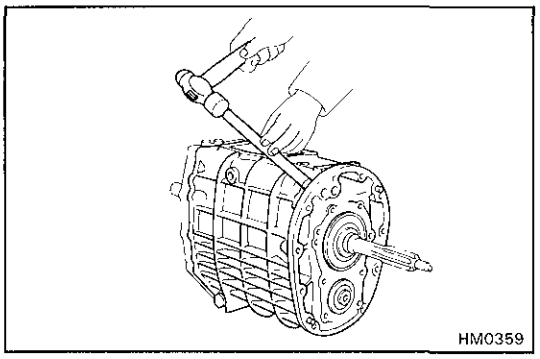

17. SEPARATE *TRANSMISSION CASE FROM* INTERMEDIATE PLATE

(a) Using a brass bar and a hammer, carefully tap off the transmission case.

(b) Remove the transmission case from the intermediate plate.

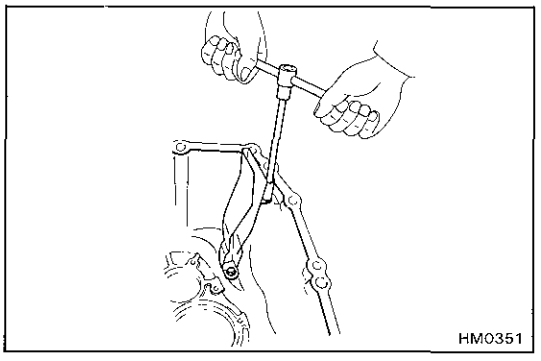

18. REMOVE OIL RECEIVER FROM TRANSMISSION CASE

Remove the two bolts and oil receiver.

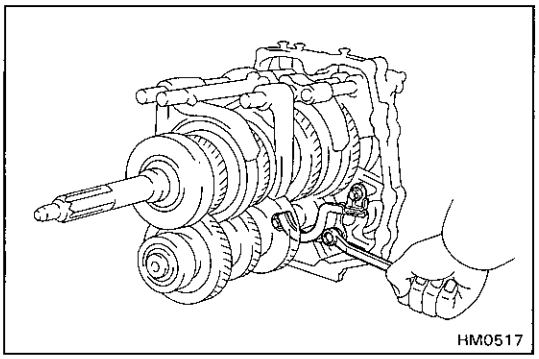
HM0517

19. REMOVE OIL RECEIVER FROM INTERMEDIATE PLATE

Remove the three bolts and oil receiver.

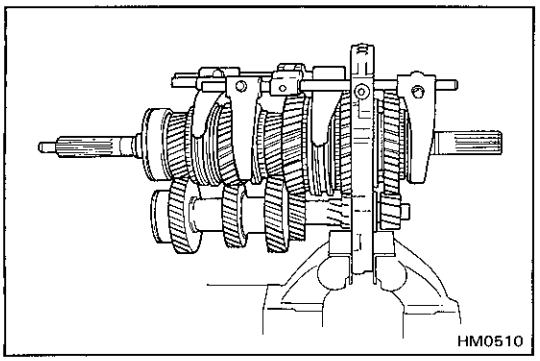
HM0510

20. MOUNT INTERMEDIATE PLATE IN VISE

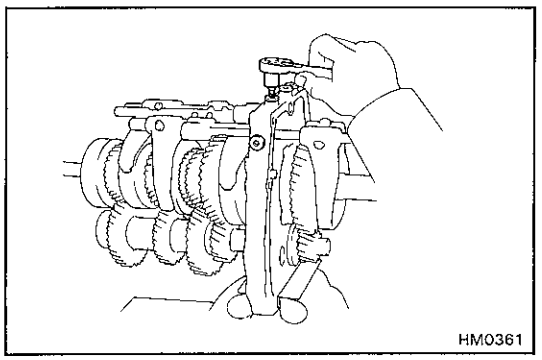
HM0361

21. REMOVE STRAIGHT SCREW PLUGS, LOCKING BALLS AND SPRINGS

(a) Using a torx socket wrench, remove the four screw plugs.

(Torx socket wrench T40 09042-00020)

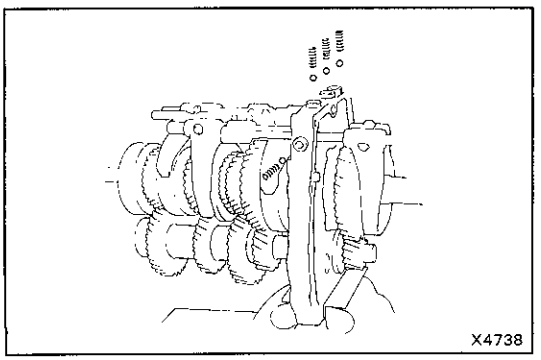
X4738

(b) Using a magnetic finger, remove the four springs and balls.

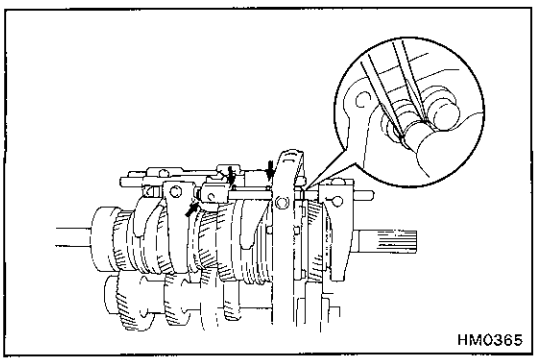
HM0365

22. REMOVE FORK SHAFT SNAP RINGS

Using two screwdrivers and a hammer, tap out the four snap rings.

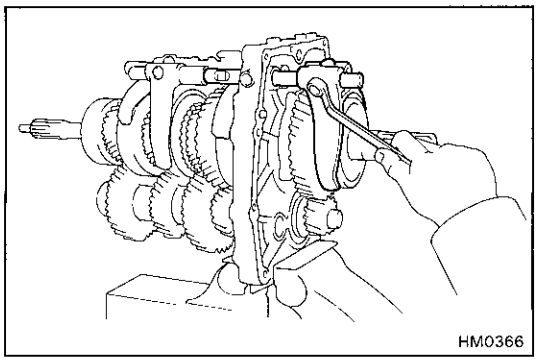
HM0366

23. REMOVE SHIFT FORK SHAFT NO.4 AND REVERSE SHIFT FORK

(a) Remove the set bolt.

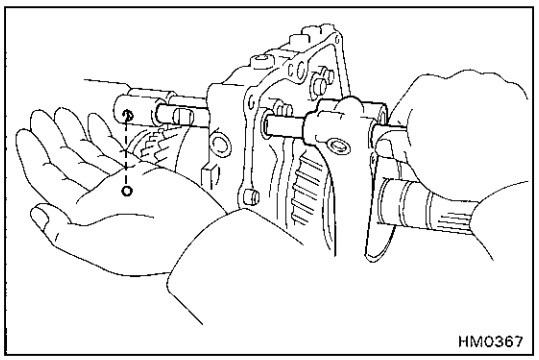
HM0367

(b) Remove the shift fork shaft No.4, reverse shift fork and ball.

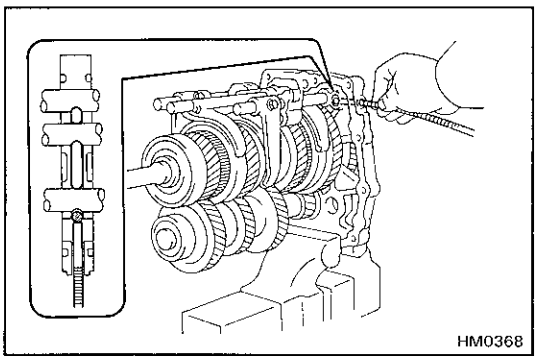
HM0368

24. REMOVE SHIFT FORK SHAFT NO.3, SHIFT FORK NO.3 AND REVERSE SHIFT HEAD

(a) Using a magnetic finger, remove the interlock ball.

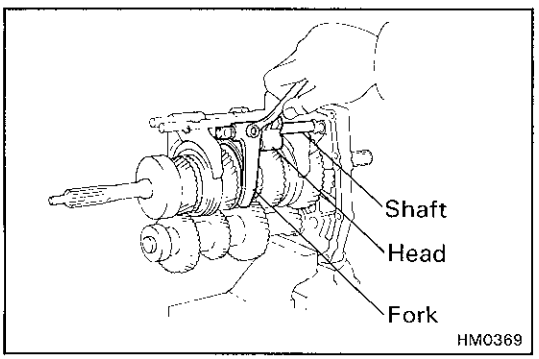

HM0369

(b) Remove the set bolt.

(c) Remove the shift fork shaft No.3, shift fork No.3 and reverse shift head.

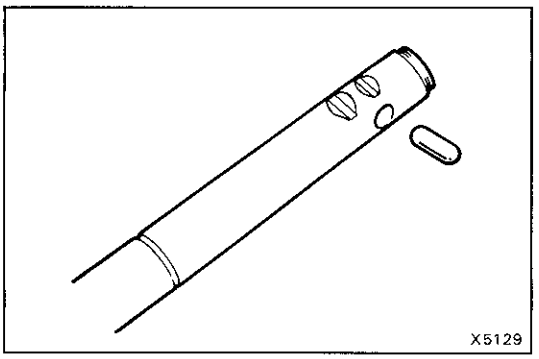
X5129

(d) Using a magnetic finger, remove the interlock pin from shift fork shaft No.3.

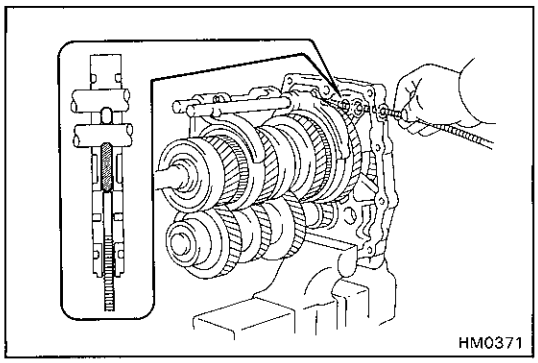
HM0371

25. REMOVE SHIFT FORK SHAFT NO.2 AND SHIFT FORK NO.1

(a) Using a magnetic finger, remove the interlock pin.

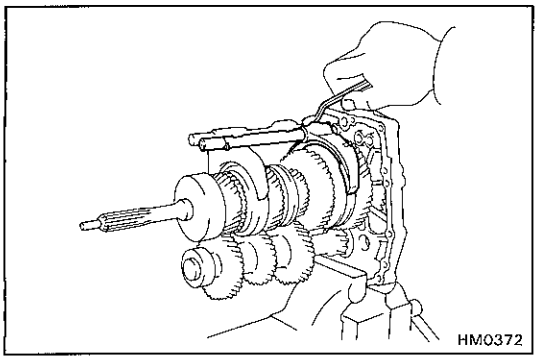
HM0372

(b) Remove the set bolt.

(c) Remove the shift fork shaft No.1 and shift fork No.1.

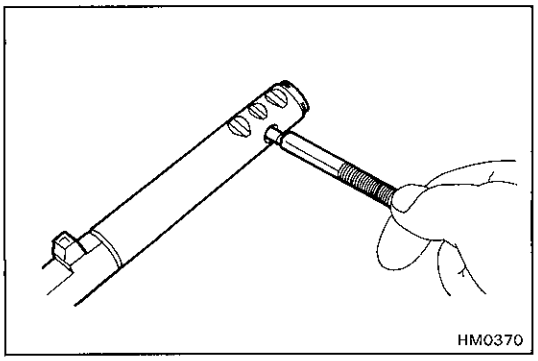
HM0370

(d) Using a magnetic finger, remove the interlock pin from shift fork shaft No.1.

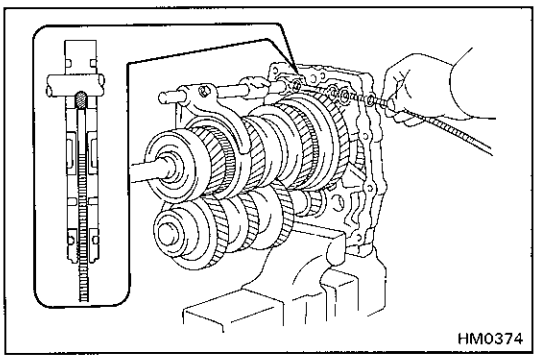
HM0374

26. REMOVE SHIFT FORK SHAFT NO.2 AND SHIFT FORK NO.2

(a) Using a magnetic finger, remove the interlock ball.

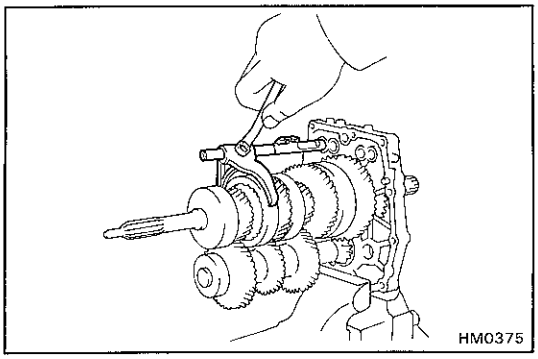
HM0375

(b) Remove the set bolt.

(c) Remove the shift fork shaft No.2 and shift fork No.2.

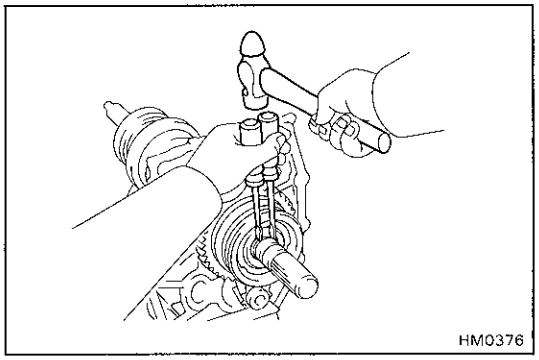

27. **REMOVE REVERSE GEAR AND HUB SLEEVE NO.4 ASSEMBLY**

(w/ SERVICE HOLE)

(a) Using two screwdrivers and a hammer, drive out the snap ring.

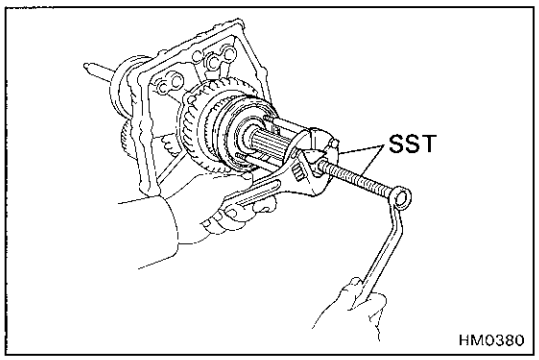

(b) Using SST and two bolts (90101-08136), remove the hub sleeve No.4 assembly.

SST 09310-17010 (09310-07010, 09310-07020)

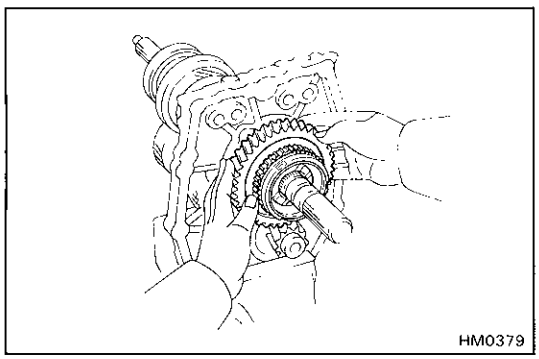

(c) Remove the synchronizer ring, reverse gear and needle roller bearing.

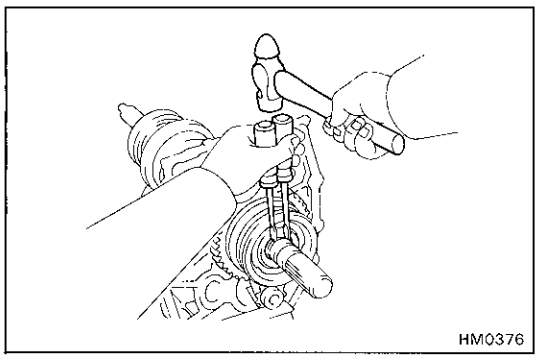

(w/o SERVICE HOLE)

(a) Using two screwdrivers and a hammer, drive out the snap ring.

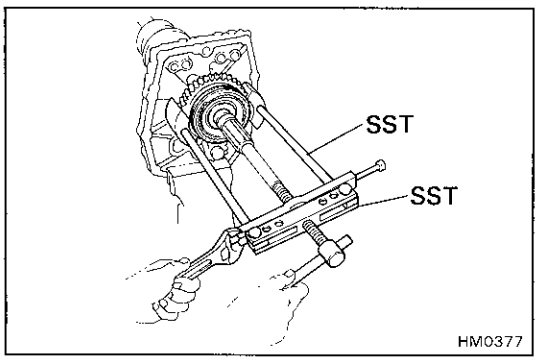

(b) Using SST, remove the reverse gear with hub sleeve No.4 assembly.

SST 09336-60010, 09950-20017

(c) Remove the needle roller bearing and synchronizer ring.

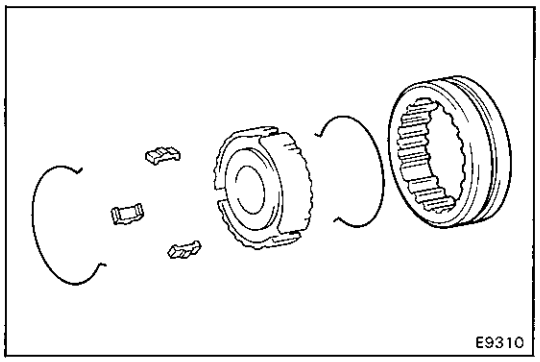

28. REMOVE HUB SLEEVE NO.4, SHIFTING KEYS AND SPRINGS FROM CLUTCH HUB NO.3

Using a screwdriver, remove the two springs and three shifting keys from clutch hub No.4.

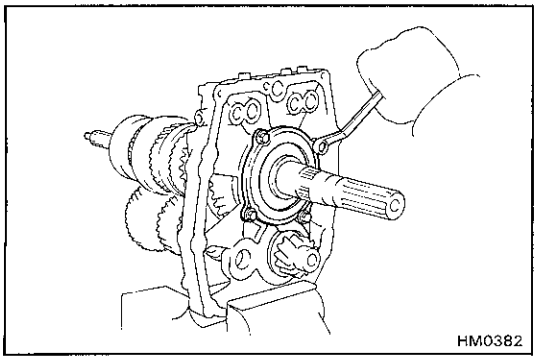

29. REMOVE REAR BEARING RETAINER

Remove the four bolts, and rear bearing retainer.

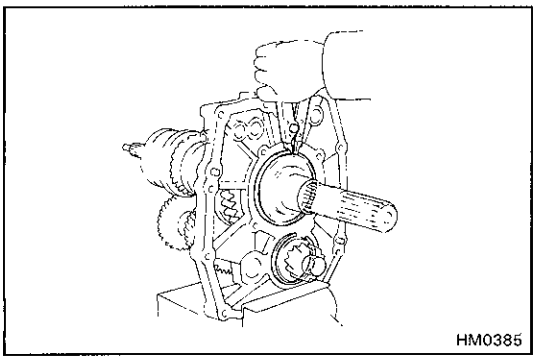

30. REMOVE TWO SNAP RINGS

(a) Using snap ring pliers, remove the two snap rings.

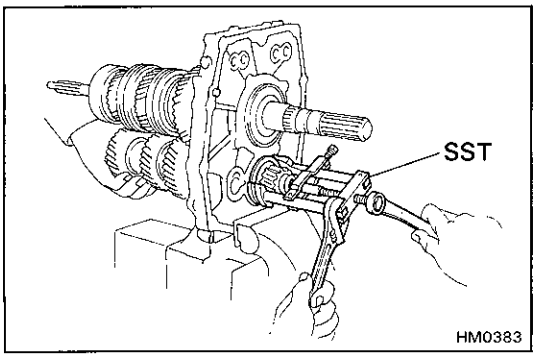

31. REMOVE COUNTER GEAR

(a) Using SST, remove the rear bearing outer race.

SST 09602-35011

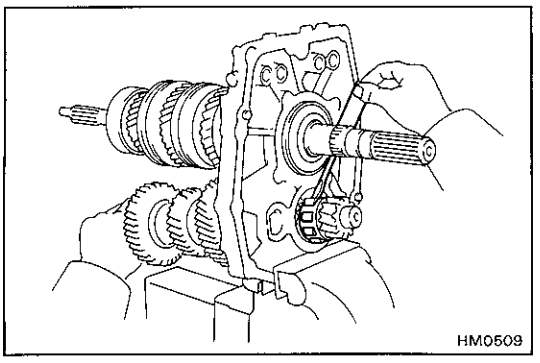

(b) Using a screwdriver, remove the roller bearing and counter gear.

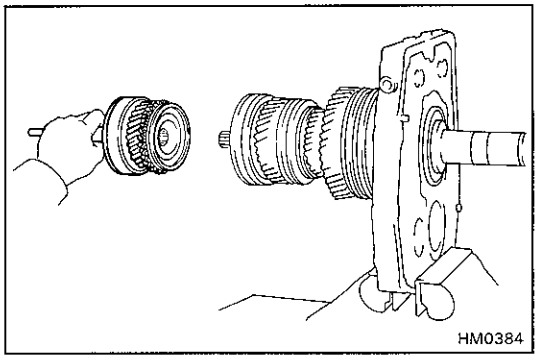

32. REMOVE INPUT SHAFT

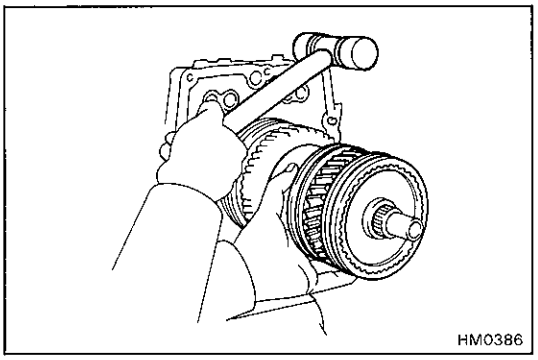

33. REMOVE OUTPUT SHAFT

Remove the output shaft, from the intermediate plate by pulling on the output shaft and tapping on the intermediate plate with plastic hammer.