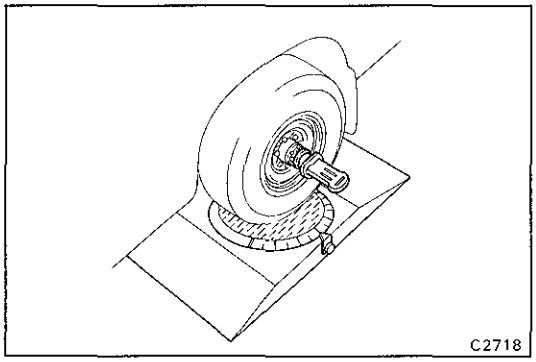
C2718

Front Wheel Alignment

INSPECT AND ADJUSTMENT OF FRONT WHEEL ALIGNMENT

1. INSTALL WHEEL ALIGNMENT EQUIPMENT

Follow the specific instructions of the equipment manufacture.

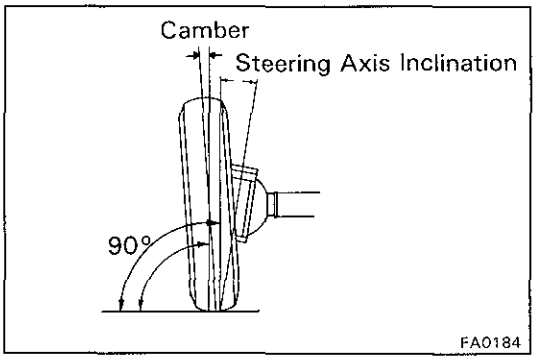

FA0184

2. INSPECT CAMBER AND STEERING AXIS INCLINATION

Camber:	**1°00′ ± 45′ (1° ± 0.75°)**
Cross camber:	**30′ (0.5°) or less**
Steering axis inclination:	**12°00′ ± 45′ (12° ± 0.75°)**

If the steering axis inclination is not as specified after camber have been correctly adjusted, recheck the steering knuckle and front wheel for bending or looseness.

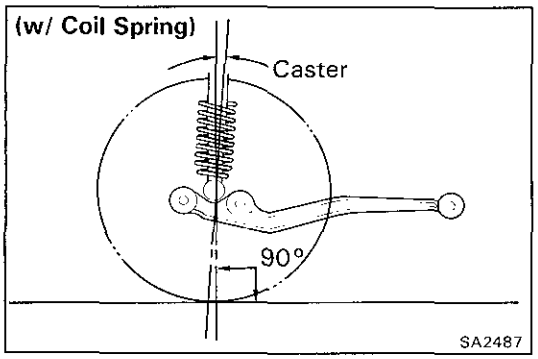

SA2487

3. (w/ COIL SPRING) CHECK CASTER

(See page A-7)

If caster is not as specified, inspect and replace damaged or worn suspension parts.

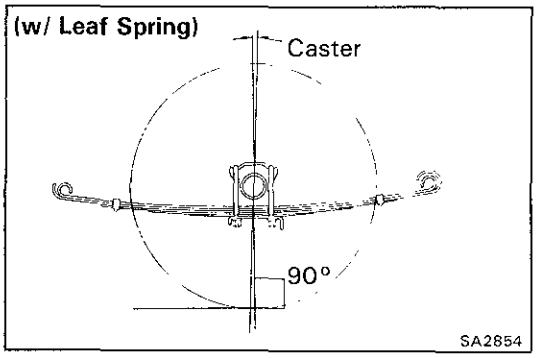

SA2854

4. (w/ LEAF SPRING) CHECK CASTER

(See page A-6)

If caster is not as specified, inspect and replace damaged or worn parts.

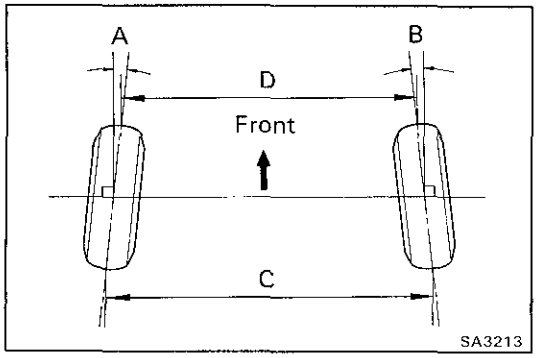

SA3213

5. INSPECT TOE-IN

Toe-in (total):

(A + B: See pages A-6, 7)

(C — D: See pages A-6, 7)

If toe-in is not within specification adjust by the tie rod end.

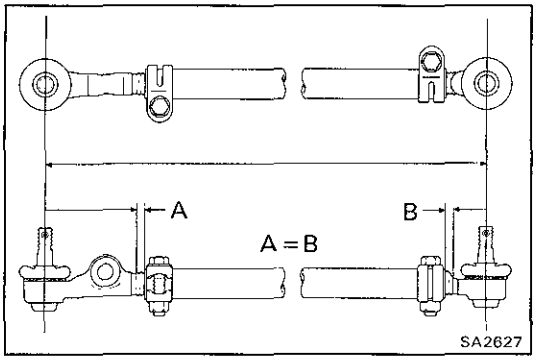

6. ADJUST TOE-IN

(a) Loosen the nuts holding the clamps to the tie rod.

(b) Adjust toe-in to the correct value by turning the tie rod.

(c) Insure that the lengths of the tie rod ends are the same.

(d) Torque the nuts holding the clamps.

Torque: 37 N·m (375 kgf·cm, 27 ft·lbf)

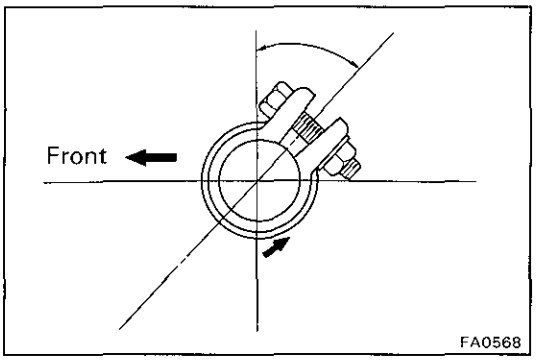

HINT: The clamps opening must be positioned at the rear of the tie rod and face within 45° from the verticle axis.

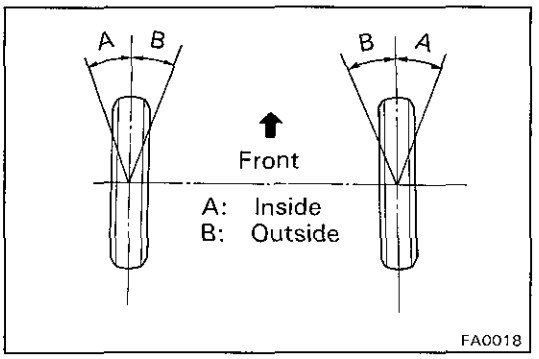

7. INSPECT WHEEL ANGLE

Remove the caps of the knuckle stopper bolts and check the steering angles.

Wheel angle:

Wheel angle		
Max.	Inside wheel	$32°^{+0°}_{-3°}$
	Outside wheel	30° (Leaf Spring Type)
		28° (Coil Spring Type)

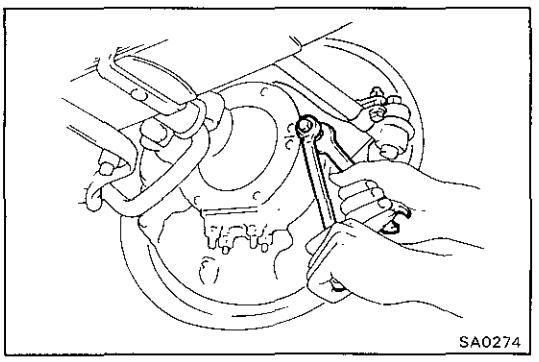

HINT: When the steering wheel is fully turned, make sure that the wheel is not touching the body or brake flexible hose.

If maximum steering angles differ from the standard value, adjust the wheel angle with the knuckle stopped bolts.

Torque: 44 N·m (450 kgf·cm, 33 ft·lbf)

If the wheel angle still cannot be adjusted within limits, inspect and replace damaged or worn steering parts.