FREE WHEELING HUB

COMPONENTS

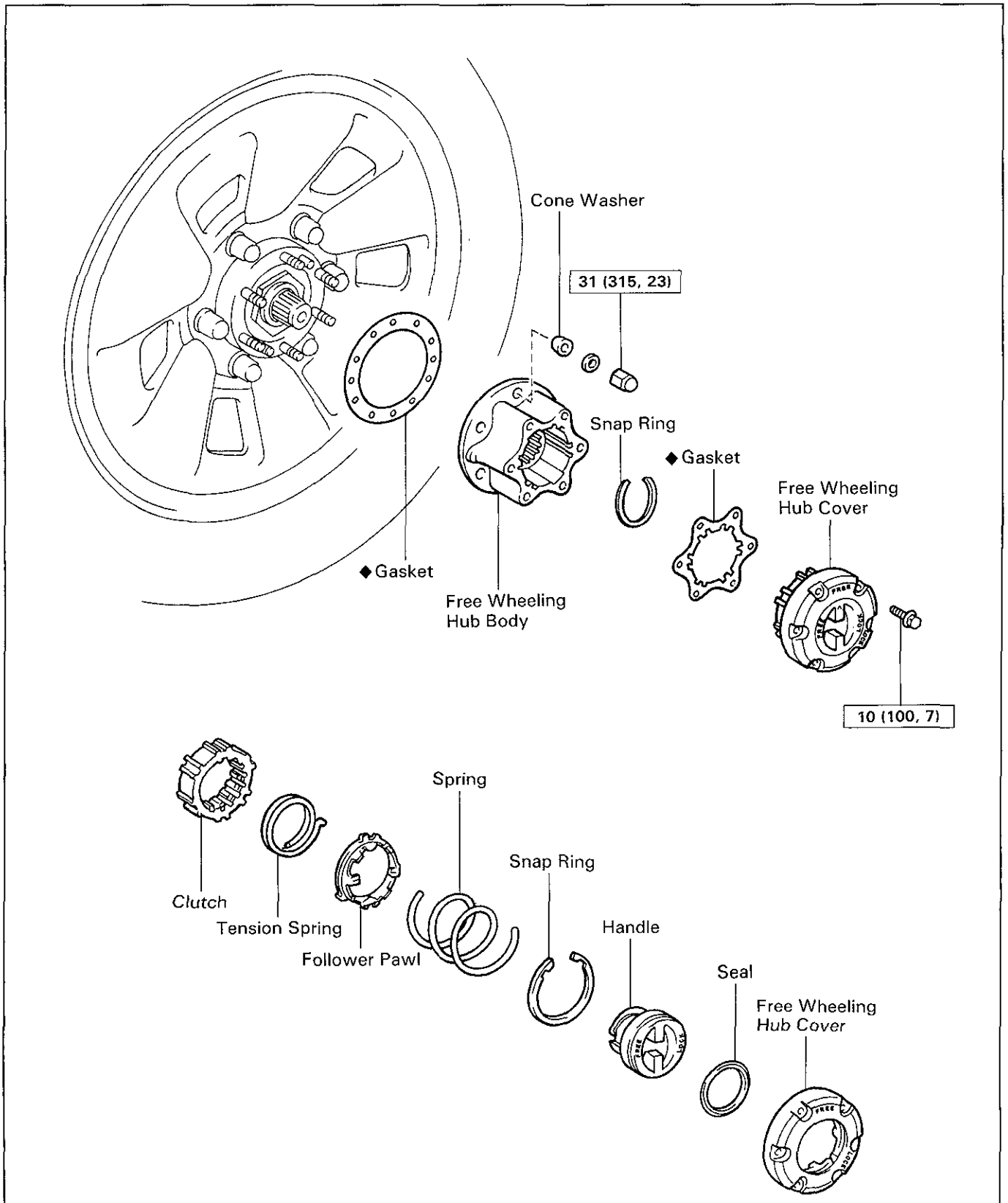

N·m (kgf·cm, ft·lbf) : Specified torque

◆ Non-reusable part

R03081

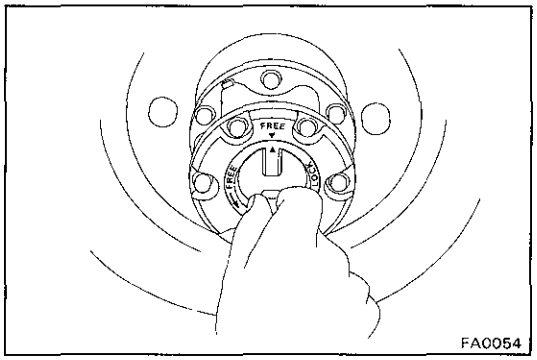

REMOVAL OF FREE WHEELING HUB

(See page SA-5)

1. REMOVE FREE WHEELING HUB COVER

(a) Set the control handle to FREE.

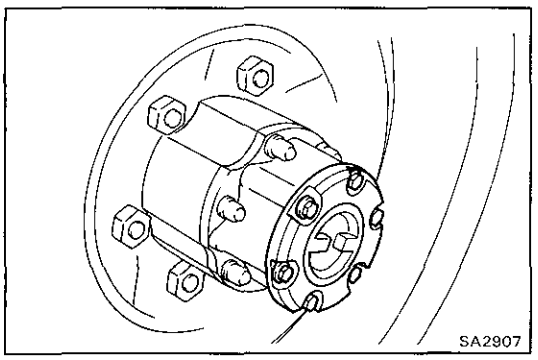

(b) Remove the six cover mounting bolts and pull off the cover.

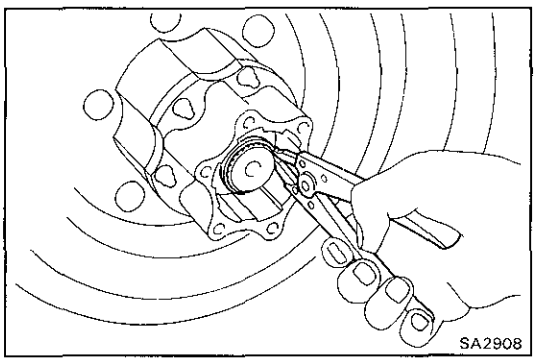

2. REMOVE SNAP RING

Using snap ring pliers, remove the snap ring.

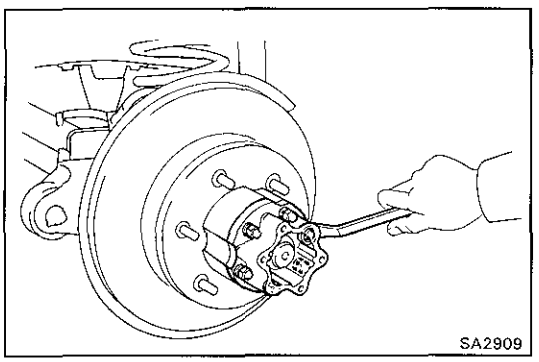

3. REMOVE FREE WHEELING HUB BODY

(a) Remove the six mounting nuts and washers.

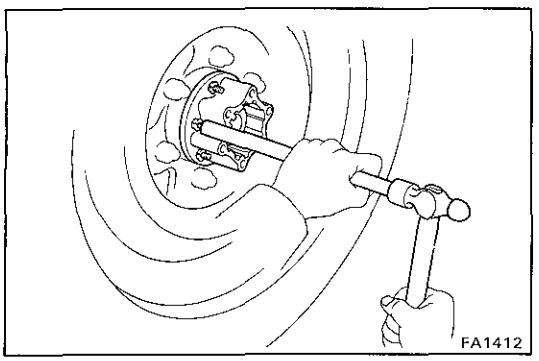

(b) Using a brass bar and hammer, tap on the bolts head and remove the six cone washers.

(c) Pull off the free wheeling hub body.

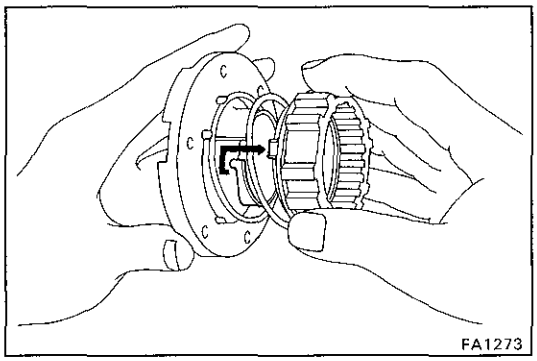

DISASSEMBLY OF FREE WHEELING HUB

(See page SA-5)

REMOVE CONTROL HANDLE FROM FREE WHEELING HUB COVER

(a) Compressing the spring, remove the pawl tab from the handle cam, and remove the clutch.

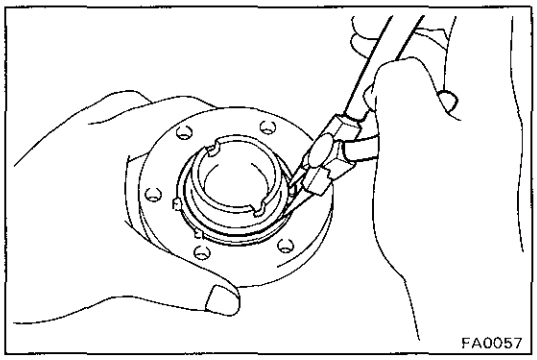

(b) Using snap ring pliers, remove the snap ring from the free wheeling hub cover.

(c) Remove the control handle from the free wheeling hub cover.

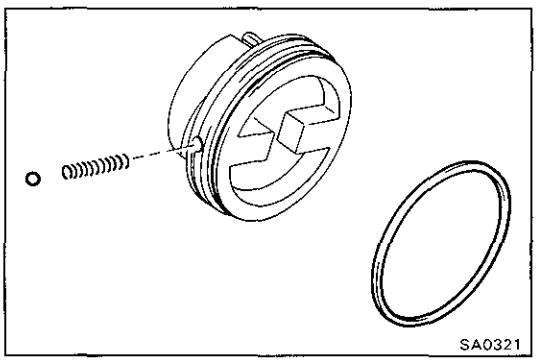

(d) Remove the steel ball and spring from the control handle.

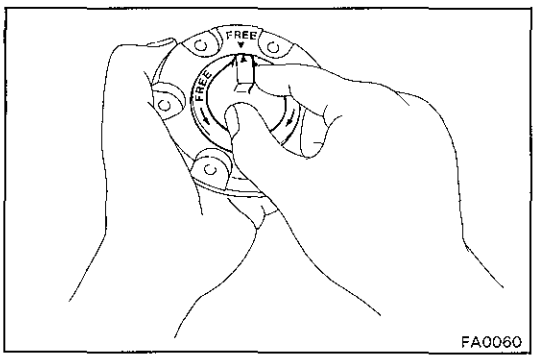

INSPECTION OF FREE WHEELING HUB

1. INSPECT COVER, HANDLE AND SEAL

Temporarily install the handle in the cover and check that the handle moves smoothly and freely.

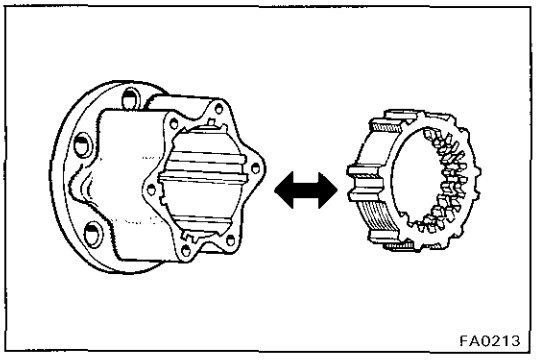

2. INSPECT BODY AND CLUTCH

Check that the clutch moves smoothly in the body.

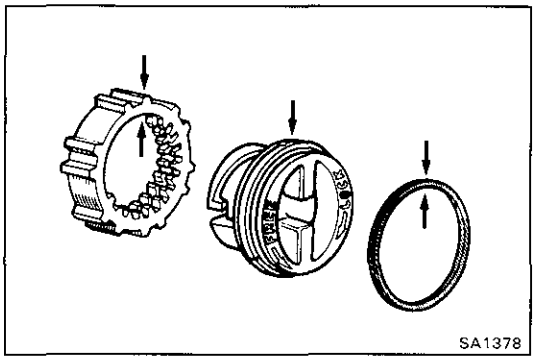

ASSEMBLY OF FREE WHEELING HUB

1. APPLY MP GREASE TO SLIDING SURFACE OF PARTS

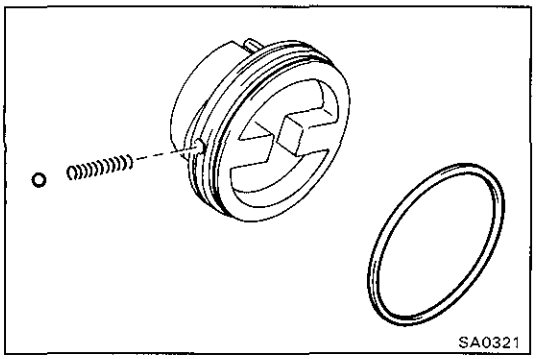

2. INSTALL CONTROL HANDLE TO COVER

(a) Install the seal, spring and steel ball to the handle.

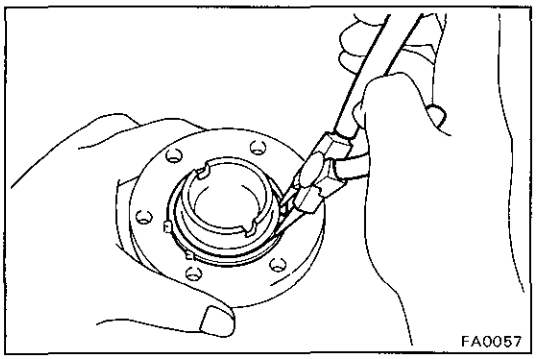

(b) Install the handle in the cover and snap ring with snap ring pliers.

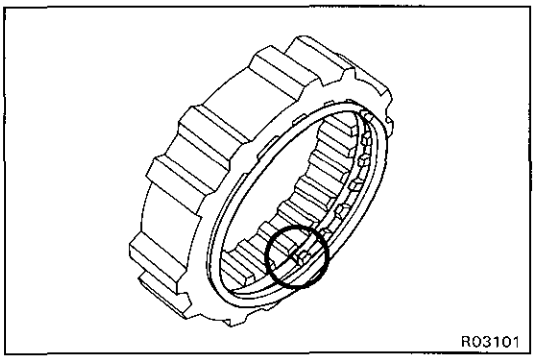

3. INSTALL TENSION SPRING IN CLUTCH

Install the tension spring in the clutch with the spring end aligned with the initial groove.

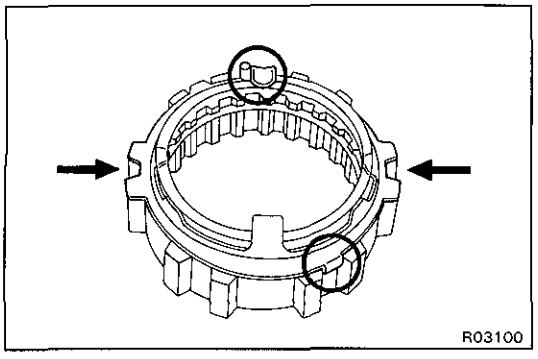

4. INSTALL FOLLOWER PAWL TO CLUTCH

(a) Place the follower pawl on the tension spring with one of the large tabs against the bent spring end.

(b) Place the top ring of the spring on the small tabs.

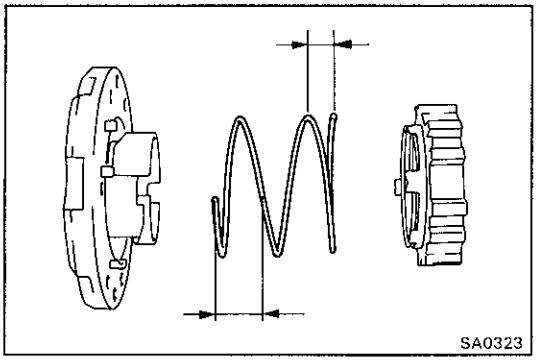
SA0323

5. **INSTALL CLUTCH AND SPRING INTO COVER**

(a) Place the spring between the cover and clutch with the large spring end toward the cover.

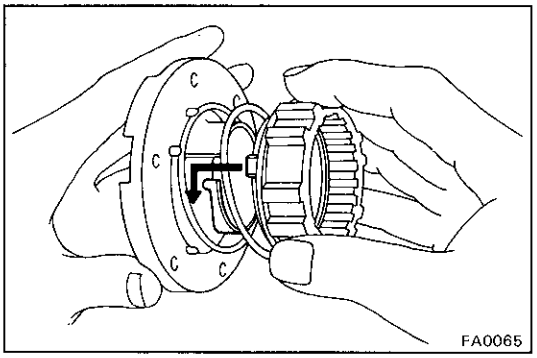
FA0065

(b) Compress the spring and install the clutch with the pawl tab fit to the handle cam.

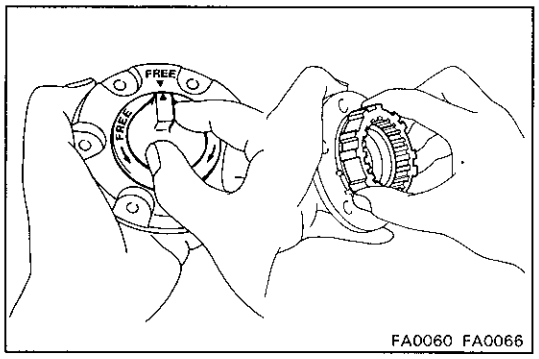

FA0060 FA0066

6. **TEMPORARILY INSTALL COVER TO BODY AND CHECK FREE WHEELING HUB**

(a) Set the control handle and clutch to the FREE position.

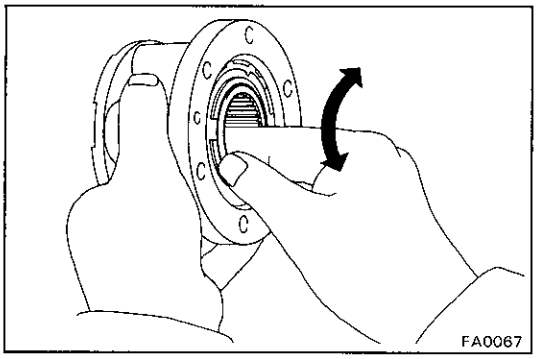
FA0067

(b) Insert the cover to the body and verify that the hub turns smoothly.

(c) Remove the cover from the body.

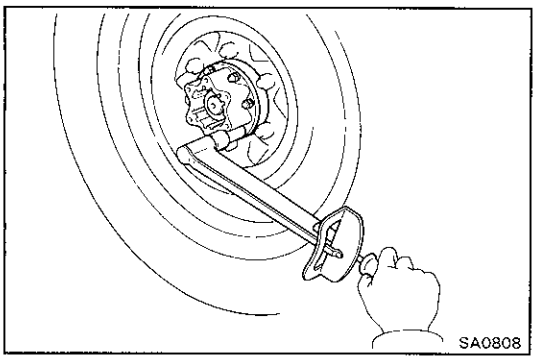
SA0808

INSTALLATION OF FREE WHEELING HUB

(See page SA-5)

1. **INSTALL FREE WHEELING HUB BODY**

(a) Place a new gasket in position on the front axle hub.

(b) Install the free wheeling hub body with six cone washers, washers and nuts. Torque the nuts.

Torque: 31 N·m (315 kgf·cm, 23 ft·lbf)

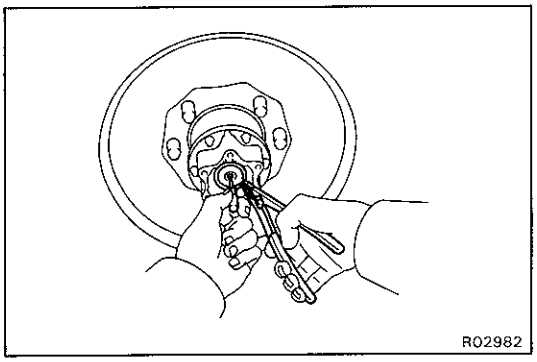

2. INSTALL SNAP RING

(a) Install a bolt to the axle shaft and pull it out.

(b) Using snap ring pliers, install the snap ring.

(c) Remove the bolt.

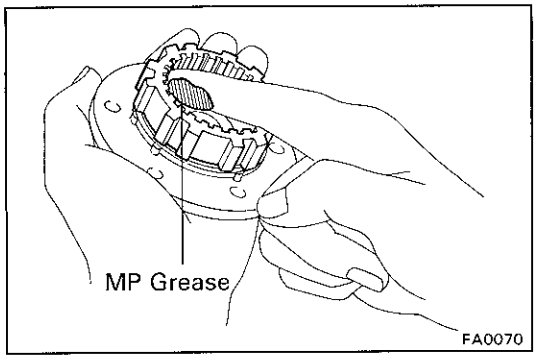

3. APPLY MP GREASE TO INNER HUB SPLINES

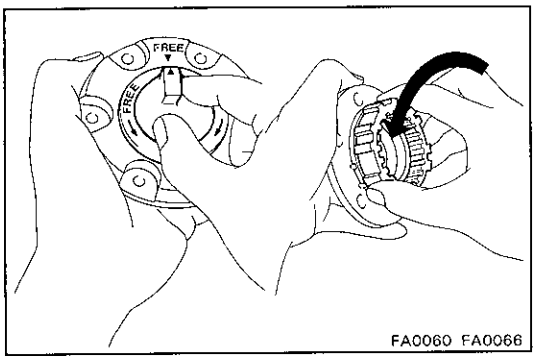

4. INSTALL FREE WHEELING HUB COVER WITH NEW GASKET

(a) Set the control handle and clutch to the FREE position.

(b) Place a new gasket in position on the cover.

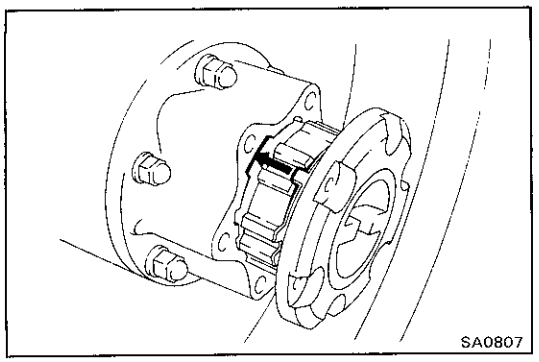

(c) Install the cover to the body with the follower pawl tabs aligned with the non-toothed portions of the body.

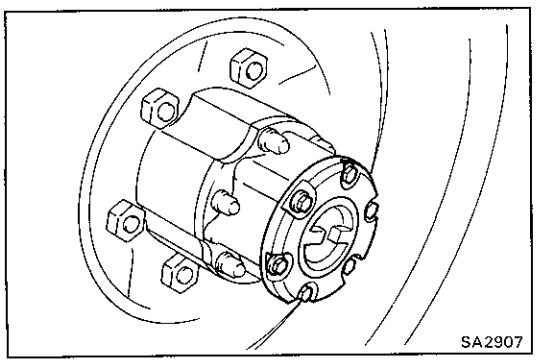

(d) Install and torque the six cover mounting bolts.

Torque: 10 N·m (100 kgf·cm, 7 ft·lbf)