FRONT AXLE HUB

COMPONENTS

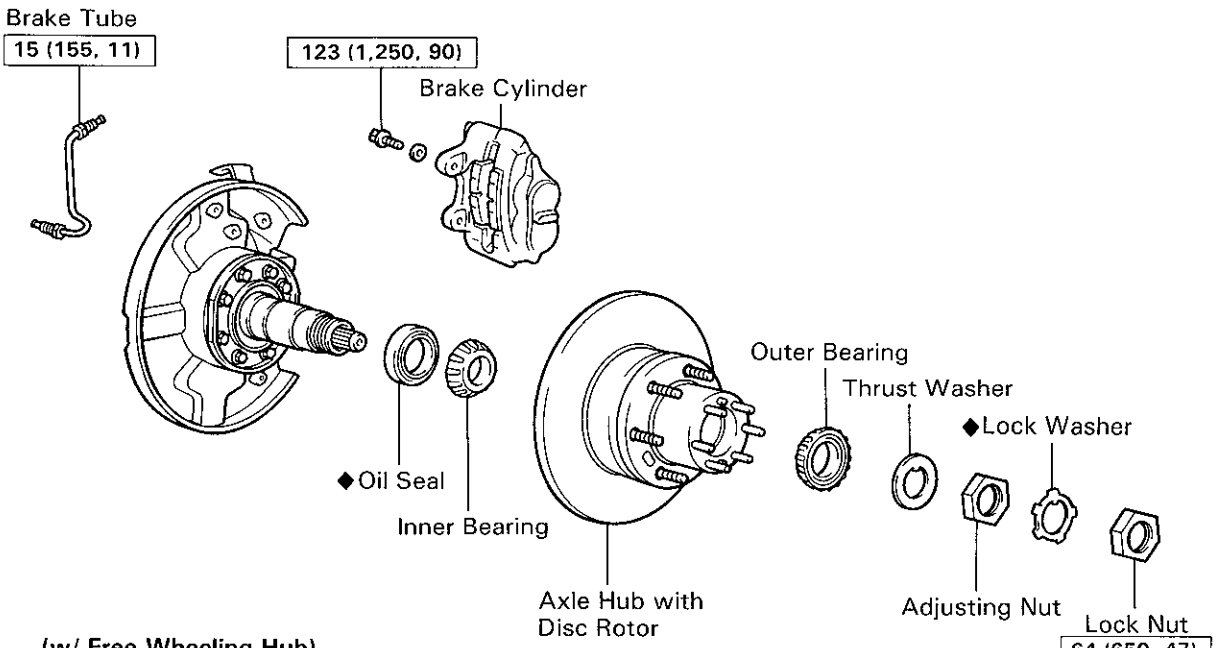

(w/ Free Wheeling Hub)

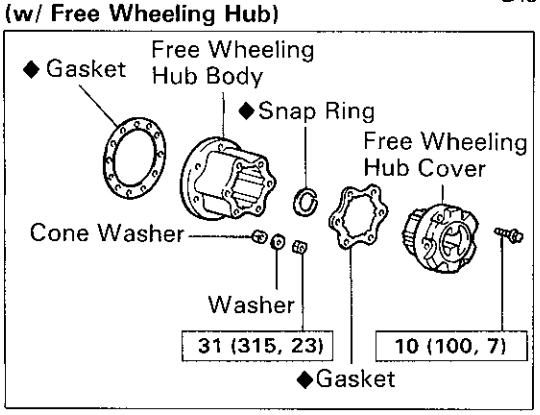

(w/o Free Wheeling Hub)

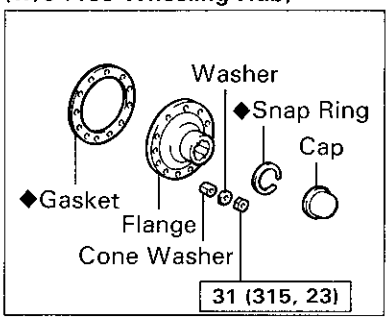

(w/ Power Locking Hub)

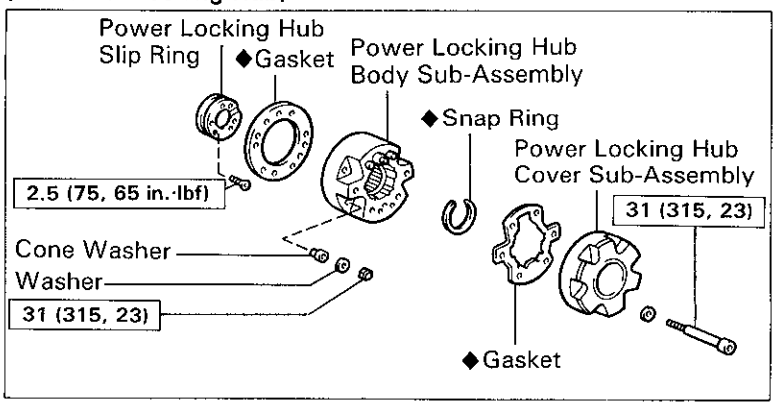

N·m (kgf·cm, ft·lbf) : Specified torque

◆ Non-reusable part

R02986

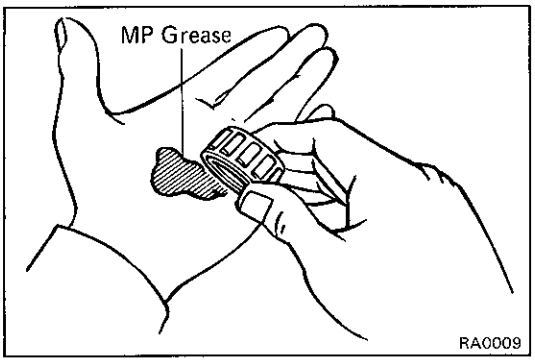

ASSEMBLY OF FRONT AXLE HUB

(See page SA-11)

1. PACK BEARINGS WITH MP GREASE

(a) Place MP grease in the palm of your hand.

(b) Pack grease into the bearing, continuing until the grease oozes out from the other side.

(c) Do the same around the bearing circumference.

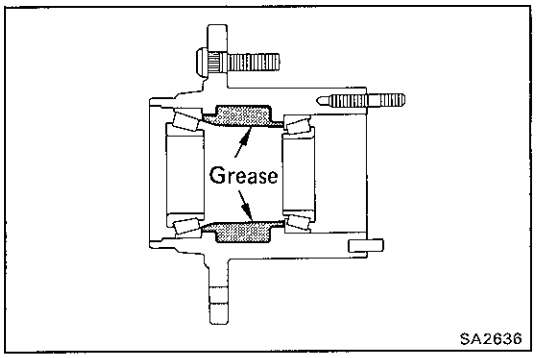

2. PACK INSIDE OF HUB WITH MP GREASE

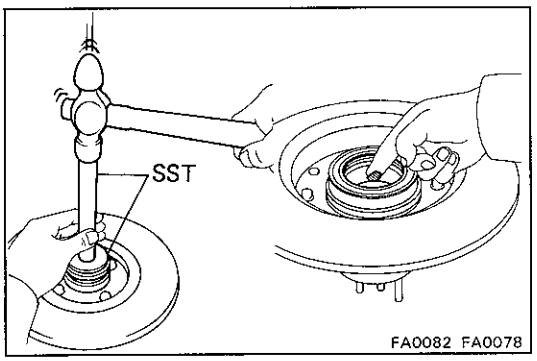

3. INSTALL INNER BEARING AND OIL SEAL

(a) Place inner bearing into the hub.

(b) Using SST, drive in the oil seal into the hub.

SST 09608-35014 (09608-06020, 09608-06150)

(c) Coat the oil seal with MP grease.

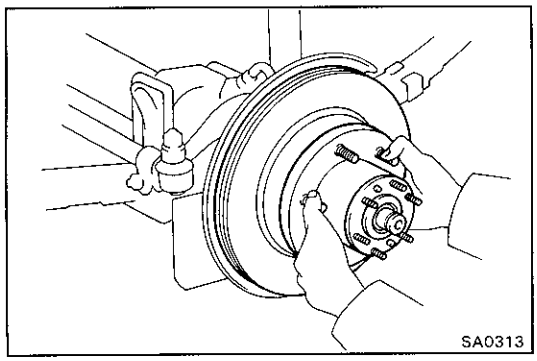

4. INSTALL AXLE HUB ON SPINDLE

(a) Place the axle hub on the spindle.

(b) Install the outer bearing and thrust washer.

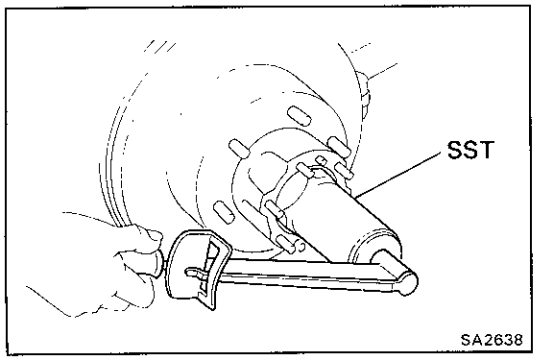

5. ADJUST PRELOAD

(a) (w/ Power Locking Hub)
Remove the vinyl tape from the tip of spindle.

(b) Using SST, torque the bearing adjusting nut.

SST 09607-60020

Torque: 59 N·m (600 kgf·cm, 43 ft·lbf)

NOTICE: Be careful not to damage the oil seal.

(c) Turn the hub right and left two or three times.

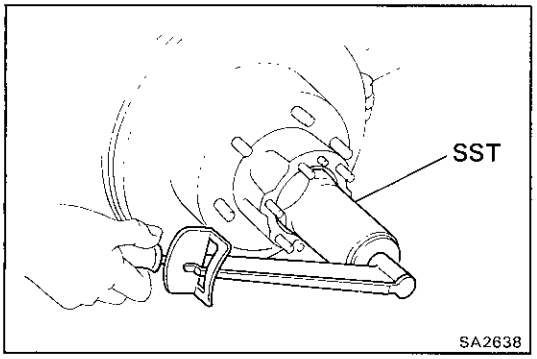

(d) Using SST, torque the bearing adjusting nut.

SST 09607-60020

Torque: 59 N·m (600 kgf·cm, 43 ft·lbf)

(e) Loosen the nut until it can be turned by hand.

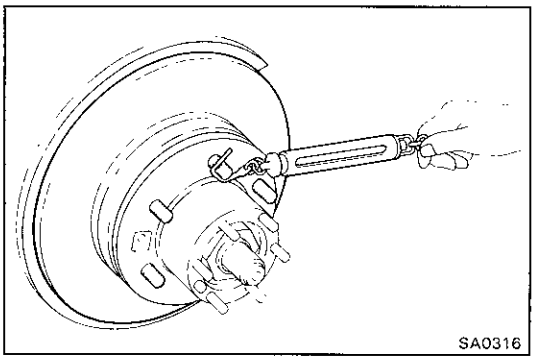

(f) Using a spring tension gauge, measure the preload.

Preload (starting):

Preload 27 — 56 N
(2.8 — 5.7 kgf, 6.2 — 12.6 lbf)

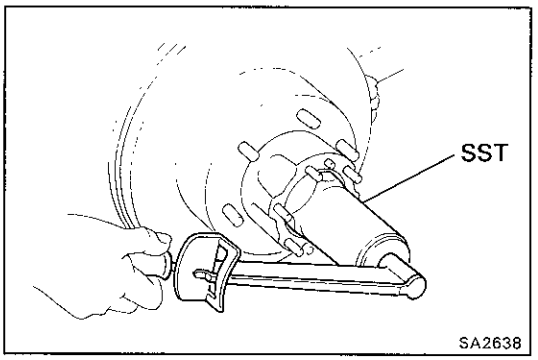

6. INSTALL LOCK WASHER AND LOCK NUT

(a) Install the lock washer and lock nut.

(b) Using SST, torque the lock nut.

SST 09607-60020

Torque: 64 N·m (650 kgf·cm, 47 ft·lbf)

(c) Check that the bearing has no play.

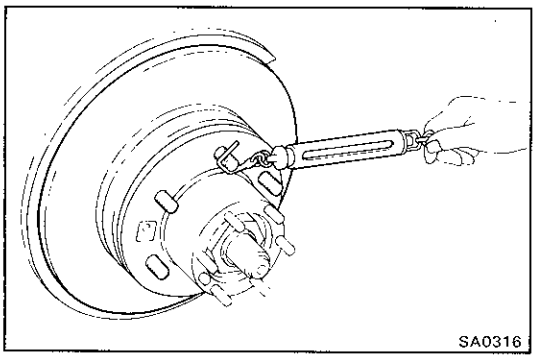

(d) Using a spring tension gauge, check the preload.

Preload (starting):

Preload 27 — 56 N
(2.8 — 5.7 kgf, 6.2 — 12.6 lbf)

If not within specification, adjust with the adjusting nut.

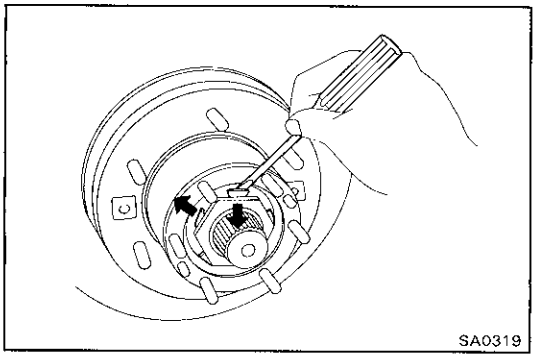

(e) Secure the lock nut by bending one of the lock washer tooth inward and another lock washer tooth outward.

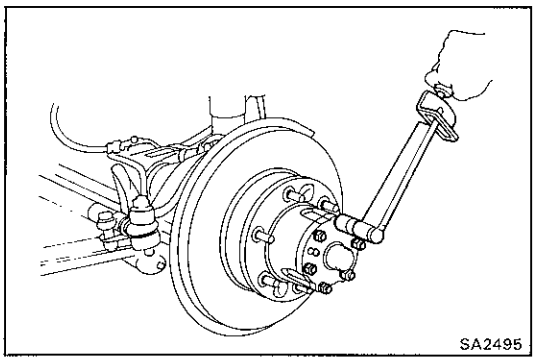
SA2495

7. INSTALL FLANGE, FREE WHEELING HUB OR POWER LOCKING HUB

HINT:

- If the vehicle has the free wheeling hub, see page SA-5.
- If the vehicle has the power locking hub, see Pub. No. RM183E, see page SA-26.

(a) Place a new gasket in position on the axle hub.

(b) Install the flange to the axle hub.

(c) Install the six cone washers, washers and nuts. Torque the nuts.

Torque: 31 N·m (315 kgf·cm, 23 ft·lbf)

(d) Install a bolt to the axle shaft and pull it out.

(e) Using snap ring pliers, install the snap ring.

(f) Remove the bolt from the axle shaft.

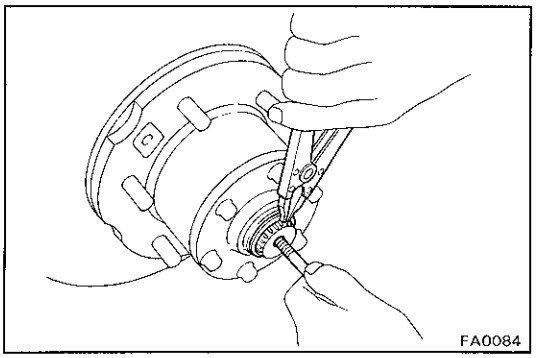
FA0084

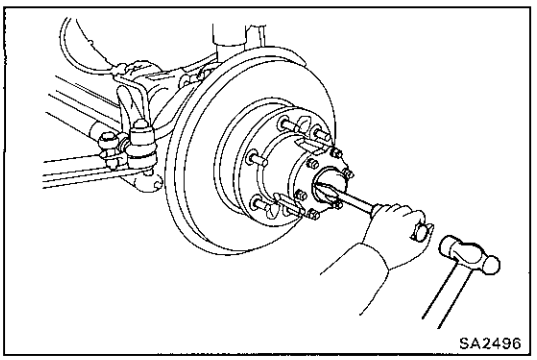
SA2496

(g) Using a hammer and screwdriver, install the cap to the flange.

8. INSTALL BRAKE CYLINDER

(a) Install the brake cylinder to the steering knuckle with the two bolts.
Torque the mounting bolts.

Torque: 123 N·m (1,250 kgf·cm, 90 ft·lbf)

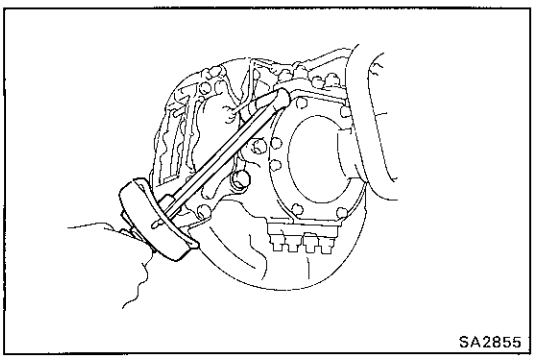
SA2855

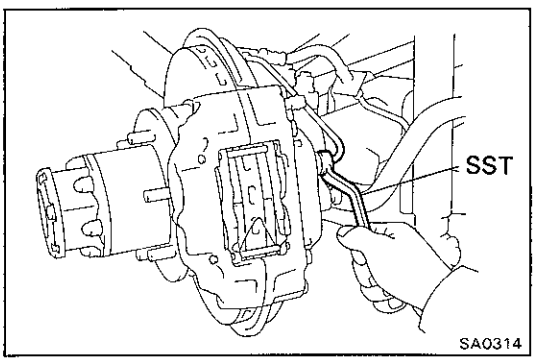

SA0314

(b) Using SST, connect the brake tube.

SST 09751-36011

Torque: 15 N·m (155 kgf·cm, 11 ft·lbf)

9. BLEED BRAKE LINE
(See Pub. No. RM183E, see page BR-7)