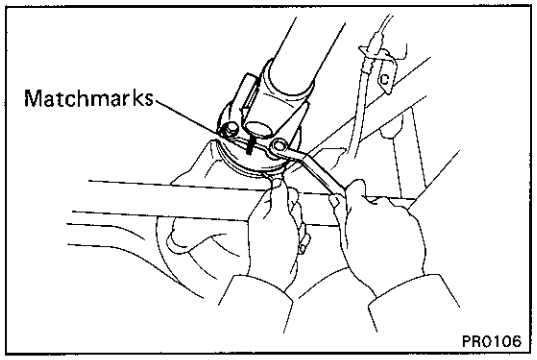

FRONT DIFFERENTIAL

On-Vehicle Replacement of Rear Oil Seal

1. DISCONNECT FRONT PROPELLER SHAFT

(a) Place matchmarks on the flanges.

(b) Remove the four bolts and nuts.

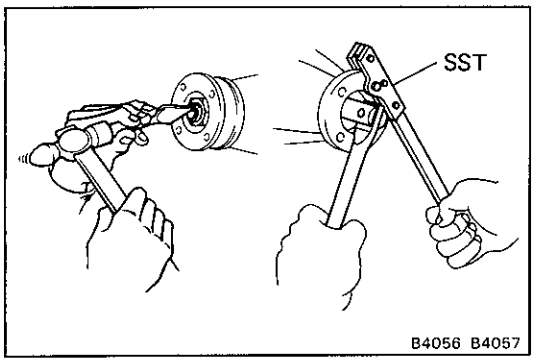

2. REMOVE COMPANION FLANGE

(a) Using a chisel and hammer, loosen the staked part of nut.

(b) Using SST to hold the flange, remove the nut and plate washer.

SST 09330-00021

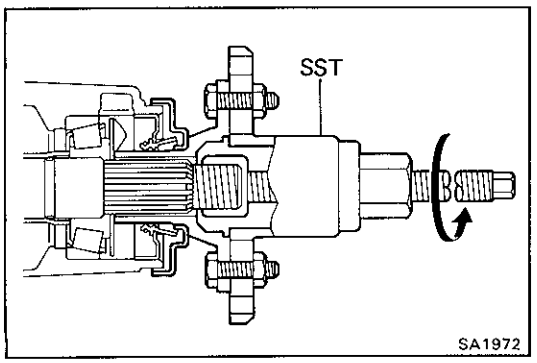

(c) Using SST, remove the companion flange.

SST 09557-22022 (09557-22050)

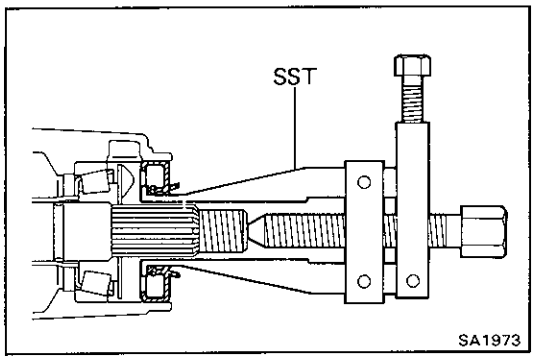

3. REMOVE OIL SEAL AND OIL SLINGER

(a) Using SST, remove the oil seal.

SST 09308-10010

(b) Remove the oil slinger.

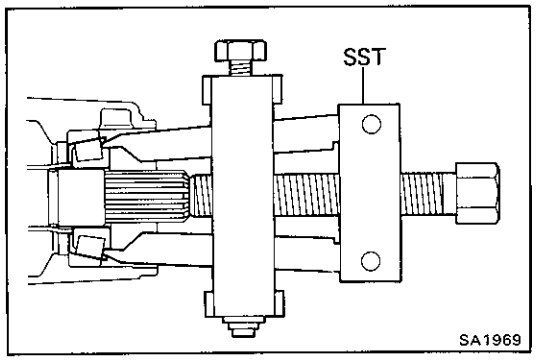

4. REMOVE REAR BEARING

Using SST, remove the rear bearing.

SST 09556-22010

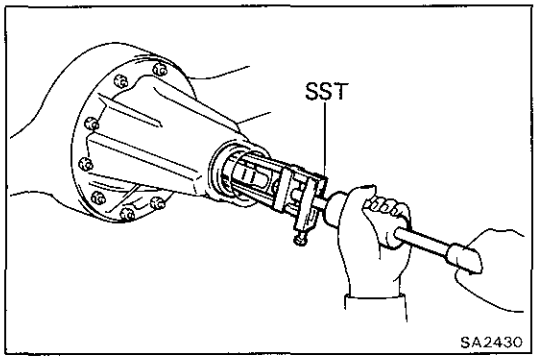

5. **(FJ, PZJ, HZJ, FZJ)**
REMOVE BEARING OUTER RACE

Using SST, remove the bearing outer race.

SST 09308-00010

NOTICE: Do not scratch the taper surface of the outer race.

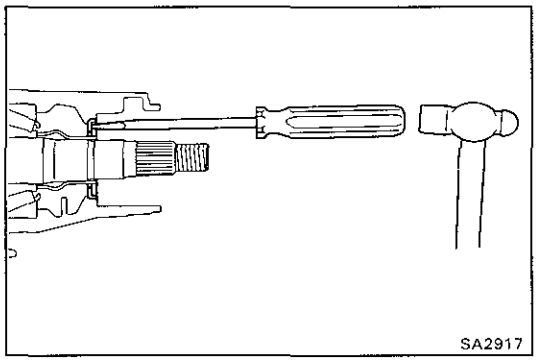

6. **(FJ, PZJ, HZJ, FZJ)**
REMOVE OIL STORAGE RING

Using a screwdriver, bend the oil storage ring and drive it out.

7. **REMOVE BEARING SPACER**

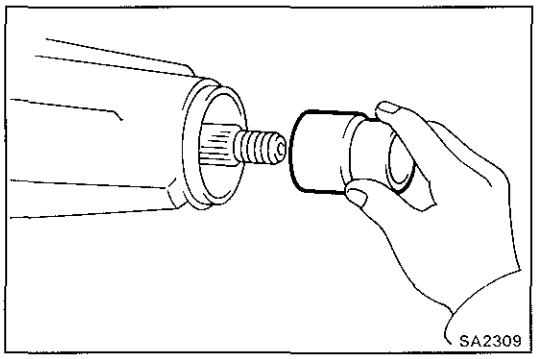

8. **INSTALL NEW BEARING SPACER**

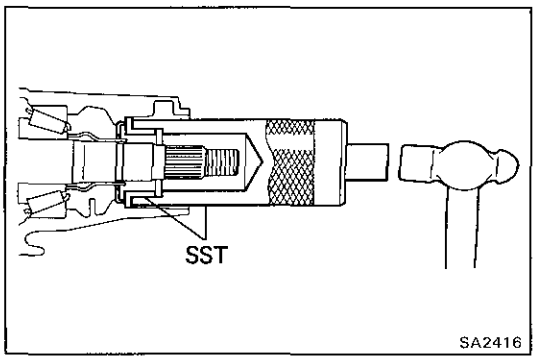

9. **(FJ, PZJ, HZJ, FZJ)**
INSTALL NEW OIL STORAGE RING

Using SST, drive in a new oil storage ring.

SST 09316-60010 (09316-00010, 09316-00020)

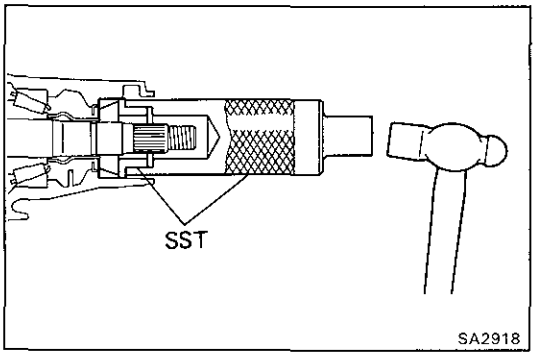

10. **(FJ, PZJ, HZJ, FZJ)**
INSTALL BEARING OUTER RACE

Using SST, drive in the bearing outer race.

SST 09316-60010 (09316-00010, 09316-00020)

11. **INSTALL REAR BEARING**

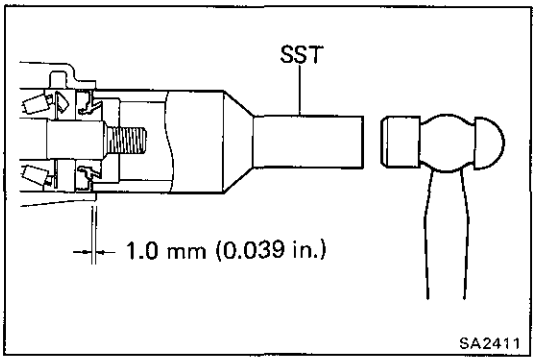

12. INSTALL OIL SLINGER AND NEW OIL SEAL

(a) Install the oil slinger facing as shown.

(b) Using SST, drive in a new oil seal as shown.

SST 09554-30011 (RJ, LJ)
09214-76011 (FJ, PZJ, HZJ, FZJ)

Oil seal drive in depth: 1.0 mm (0.039 in.)

(c) Coat the lip of the oil seal with MP grease.

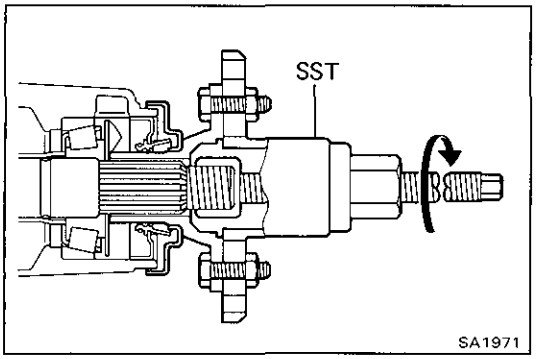

13. INSTALL COMPANION FLANGE

(a) Using SST, install the companion flange on the drive pinion.

SST 09557-22022 (09557-22050)

(b) Place the plate washer on the companion flange.

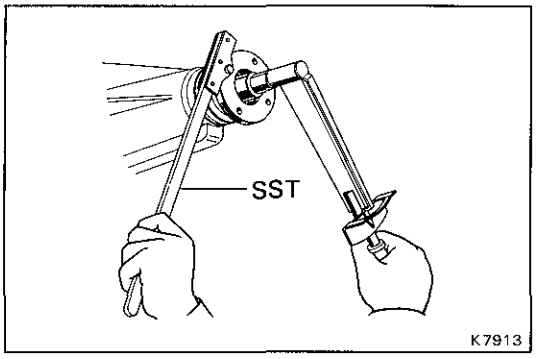

(c) Apply a light coat of gear oil on the threads of a new companion flange nut.

(d) Using SST to hold the flange, torque the nut.

SST 09330-00021

Torque: 196 N·m (2,000 kgf·cm, 145 ft·lbf)

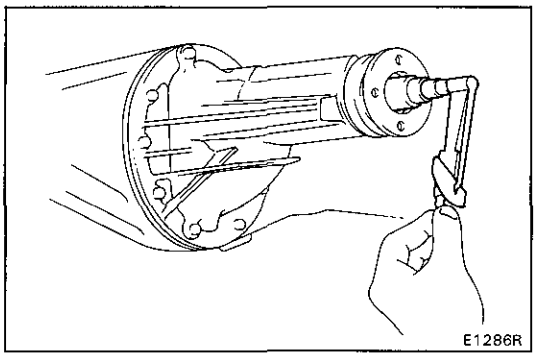

14. CHECK DRIVE PINION PRELOAD

Using a torque meter, measure the preload of the backlash between the drive pinion and ring gear.

Preload (at starting):

Models	New bearing	Reused bearing
RJ, LJ	1.9 — 2.5 N·m (19 — 26 kgf·cm, 16.5 — 22.6 in.·lbf)	0.9 — 1.3 N·m (9 — 13 kgf·cm, 7.8 — 11.3 in.·lbf)
FJ, PZJ, HZJ, FZJ	0.9 — 1.6 N·m (10 — 16 kgf·cm, 8.7 — 13.9 in.·lbf)	0.5 — 0.8 N·m (5 — 8 kgf·cm, 4.3 — 6.9 in.·lbf)

- If the preload is greater than specification, replace the bearing spacer.
- If the preload is less than specification, retighten the nut 13 N·m (130 kgf·cm, 9 ft·lbf) a little at a time until the specified preload is reached.

If the maximum torque is exceeded while retightening the nut, replace the bearing spacer and repeat the preload procedure. Do not back off the pinion nut to reduce the preload.

Maximum torque: 343 N·m (3,500 kgf·cm, 253 ft·lbf)

If everything is normal, coat the threads with gear oil, then repeat the above operation.

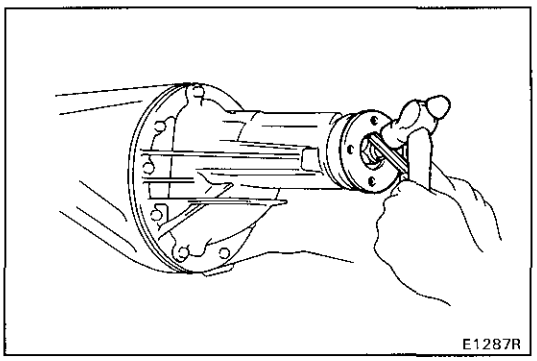

15. STAKE DRIVE PINION NUT

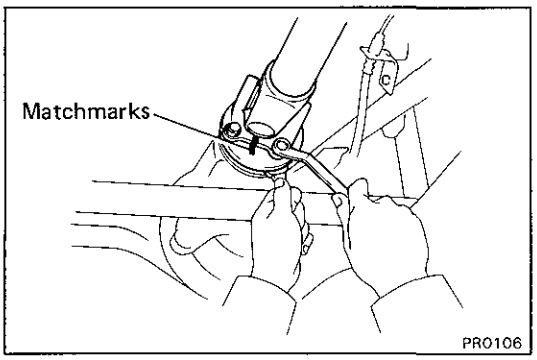

16. CONNECT FRONT PROPELLER SHAFT

(a) Align the matchmarks on the flanges and connect the flanges with four bolts, spring washers and nuts.

(b) Torque the bolts and nuts.

Torque: 74 N·m (750 kgf·cm, 54 ft·lbf)

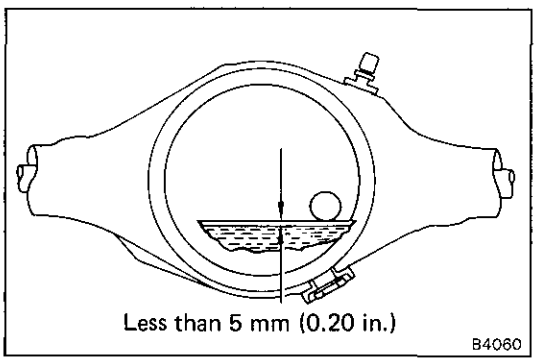

17. CHECK DIFFERENTIAL OIL LEVEL

Fill with hypoid gear oil if necessary.

Oil type: Hypoid gear oil API GL-5

Recommended oil viscosity:

Above −18°C (0°F) SAE 90
Below −18°C (0°F) SAE 80W or 80W-90

Capacity:

RJ, LJ
1.9 liters (2.1 US qts, 1.7 Imp.qts)

FJ, PZJ, HZJ, FZJ
2.6 liters (2.7 US qts, 2.3 Imp.qts)