Differential Carrier

COMPONENTS

2 Pinion Type

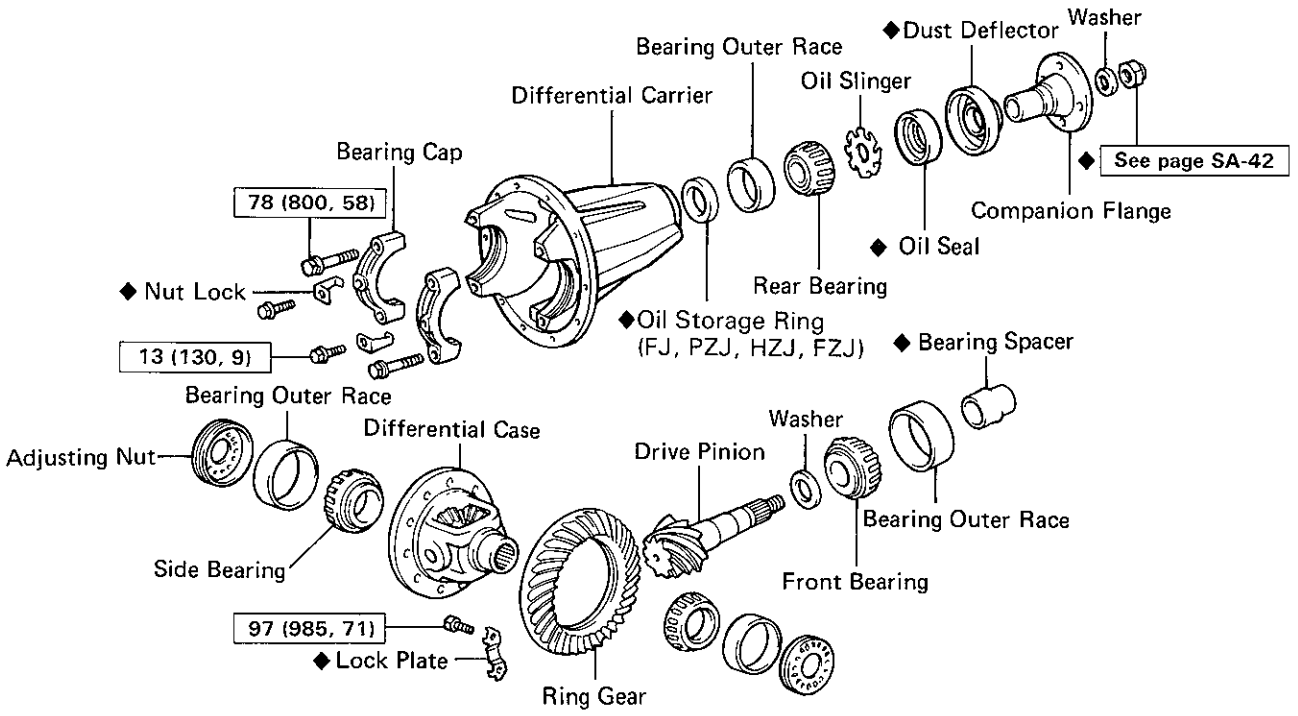

w/ Differential Lock (4 Pinion Type)

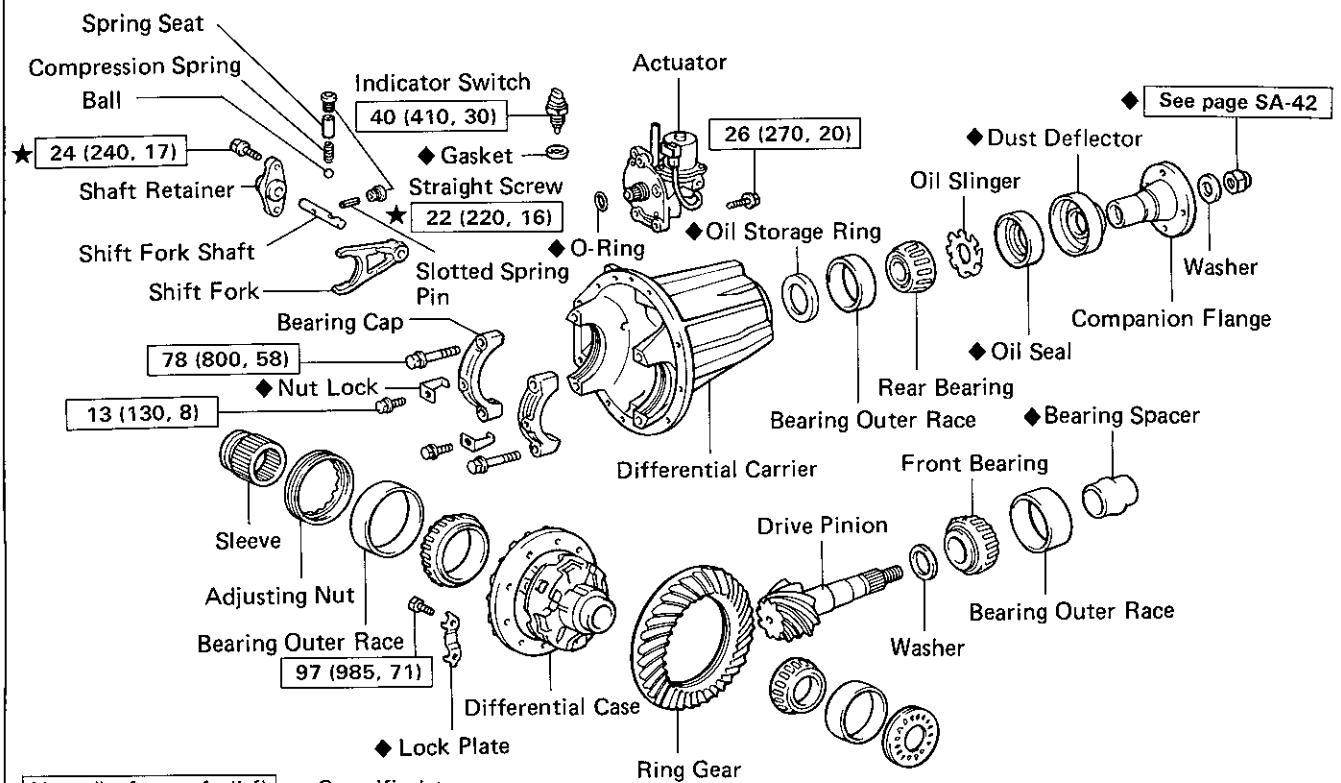

N·m (kgf·cm, ft·lbf) : Specified torque

◆ Non-reusable part

★ Precoated part

SA2579
SA2616

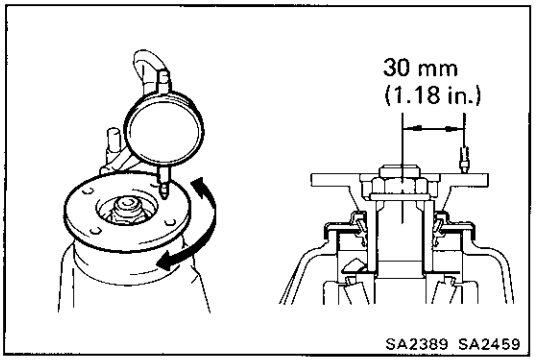

INSPECTION OF DIFFERENTIAL CARRIER

1. CHECK RUNOUT OF COMPANION FLANGE

Using a dial indicator, measure the vertical and lateral runout of the companion flange.

Maximum vertical runout: 0.10 mm (0.0039 in.)

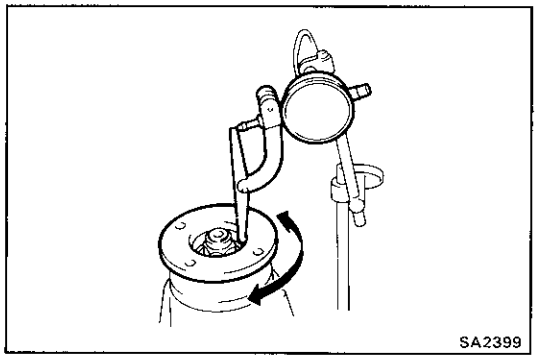

Maximum lateral runout: 0.10 mm (0.0039 in.)

If the runout is greater than the maximum, replace the companion flange.

2. CHECK RING GEAR RUNOUT

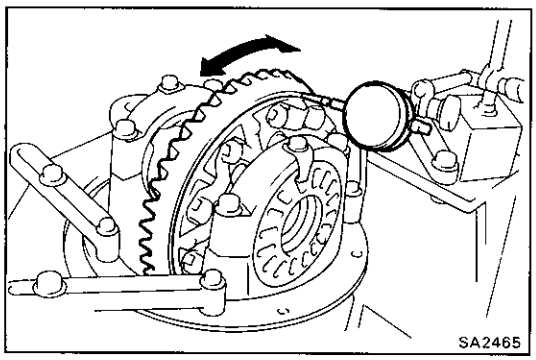

If the runout is greater than maximum, replace the ring gear.

Maximum runout: 0.10 mm (0.0039 in.)

3. CHECK RING GEAR BACKLASH

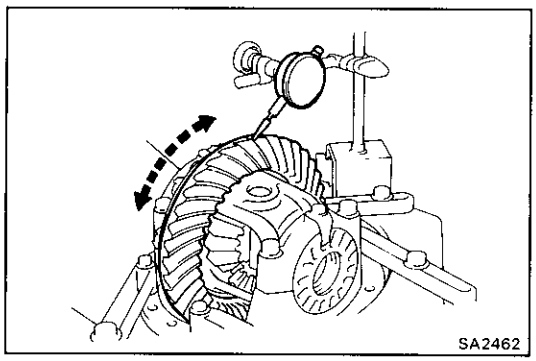

If the backlash is not within specification, adjust the side bearing preload or repair as necessary.

Backlash: 0.13 — 0.18 mm (0.0051 — 0.0071 in.)

HINT: Perform the measurements at three or more positions around the circumference of the ring gear.

4. MEASURE DRIVE PINION PRELOAD

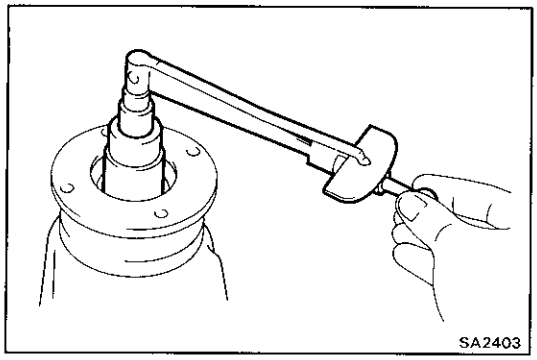

Measure the drive pinion preload, using the backlash of the drive pinion and ring gear.

Preload (at starting):

RJ, LJ

0.9 — 1.3 N·m
(9 — 13 kgf·cm, 7.8 — 11.3 in.·lbf)

FJ, PZJ, HZJ, FZJ

0.5 — 0.8 N·m
(5 — 8 kgf·cm, 4.3 — 6.9 in.·lbf)

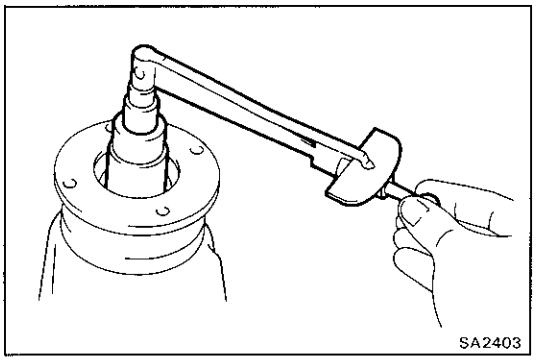
SA2403

5. **CHECK TOTAL PRELOAD**

Using a torque meter, measure the total preload.

Total preload: In addition to drive pinion preload
0.4 — 0.6 N·m (4 — 6 kgf·cm, 3.5 — 5.2 in.·lbf)

If necessary, disassemble and inspect a differential.

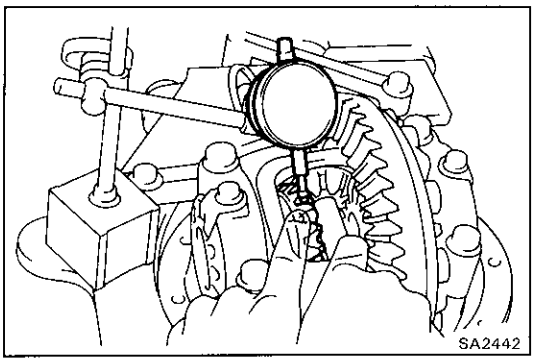
SA2442

6. **(2 PINION TYPE)**
CHECK SIDE GEAR BACKLASH

Measure the side gear backlash while holding one pinion gear toward the case.

Standard backlash: 0.05 — 0.20 mm
(0.0020 — 0.0079 in.)

If the backlash is out of specification, install the correct thrust washers. (See page SA-82)

7. **INSPECT TEETH CONTACT BETWEEN RING GEAR AND DRIVE PINION**
(See step 11 on page SA-44)

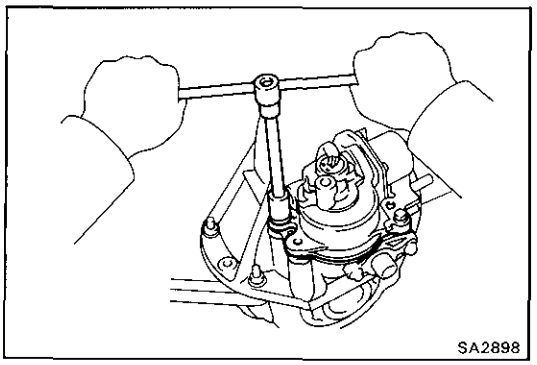

DISASSEMBLY OF DIFFERENTIAL CARRIER

(See page SA-26)

1. **(w/ DIFFERENTIAL LOCK)**
   REMOVE ACTUATOR
   (a) Remove the bolt and actuator from the differential carrier.
   (b) Remove the O-ring.

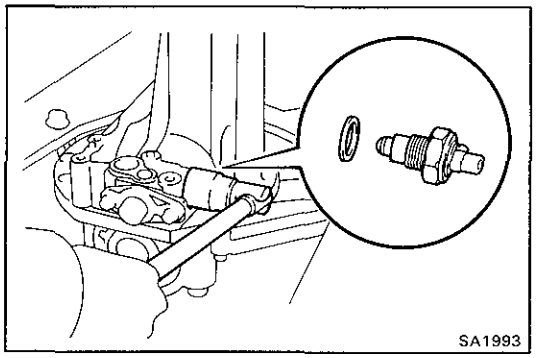

2. **(w/ DIFFERENTIAL LOCK)**
   REMOVE INDICATOR SWITCH

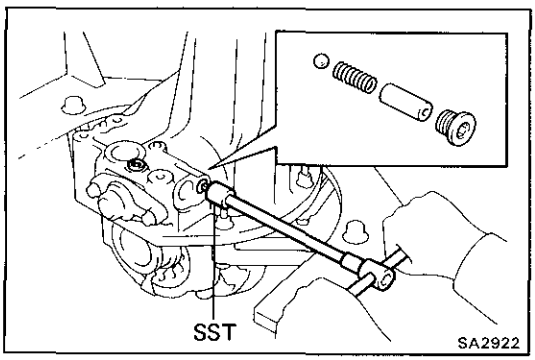

3. **(w/ DIFFERENTIAL LOCK)**
   REMOVE SHIFT FORK SHAFT
   (a) Using SST, remove the two straight screw plugs.

   SST 09313-30021

   (b) Remove the spring seat, compression spring and ball.

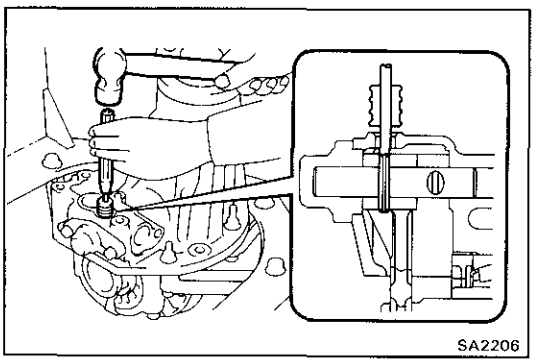

   (c) Using a pin punch and hammer, drive out the slotted spring pin.

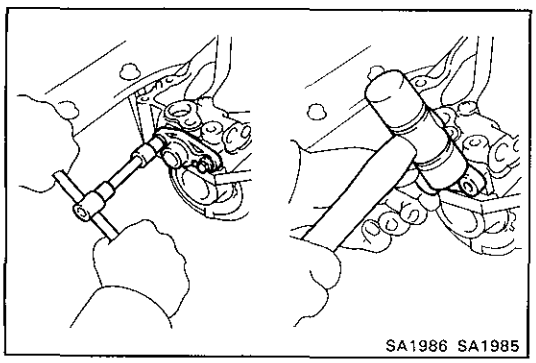

   (d) Remove the two bolts from the shaft retainer.
   (e) Using a plastic hammer, tap out the shaft retainer.

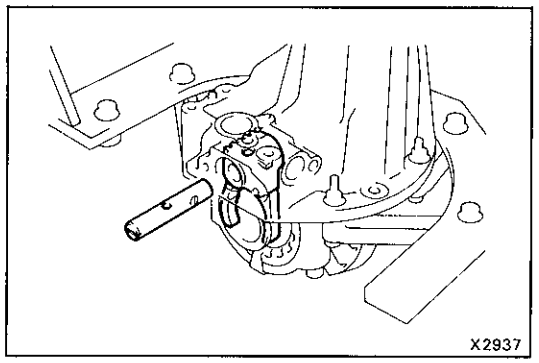

(f) Remove the shift fork shaft.

HINT: Pull out the shift fork shaft with the screwdriver turned round.

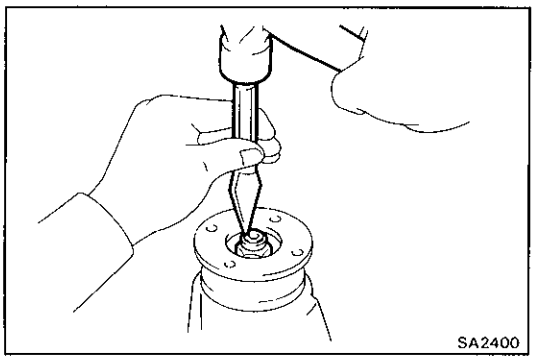

4. REMOVE COMPANION FLANGE

(a) Using a hammer and chisel, loosen the staked part of the nut.

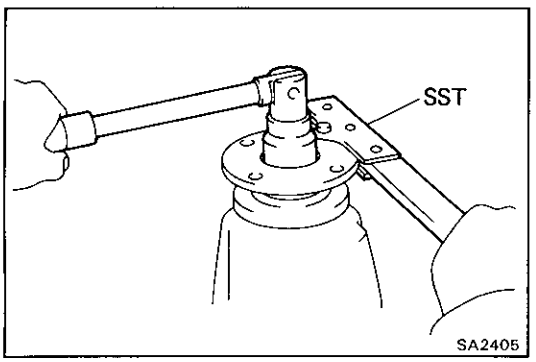

(b) Using SST to hold the flange, remove the nut and plate washer.

SST 09330-00021

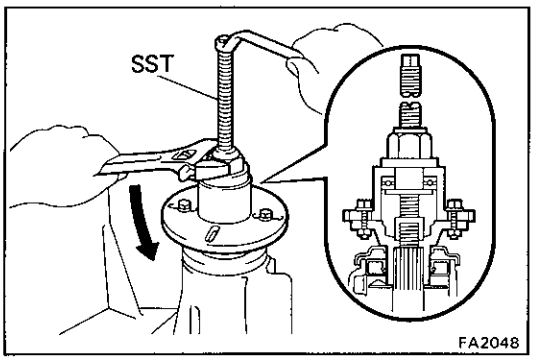

(c) Using SST, remove the companion flange.

SST 09557-22022 (09557-22050)

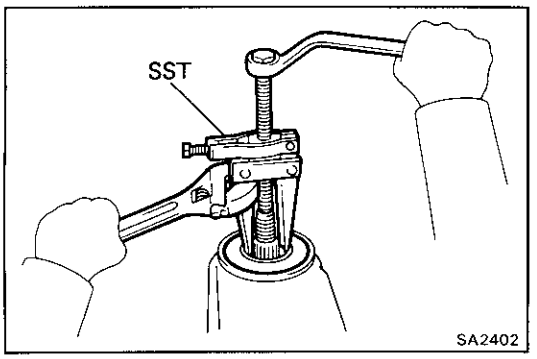

5. REMOVE REAR OIL SEAL AND OIL SLINGER

(a) Using SST, remove the oil seal from the housing.

SST 09308-10010

(b) Remove the oil slinger.

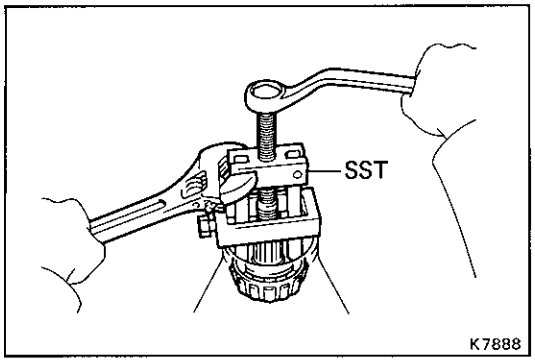

6.-1 (RJ, LJ)
REMOVE REAR BEARING AND BEARING SPACER

(a) Using SST, remove the bearing from the housing.

SST 09556-22010

(b) Remove the bearing spacer.

6.-2 (FJ, PZJ, HZJ, FZJ)
REMOVE REAR BEARING

Using SST, remove the bearing from the housing.

SST 09556-22010

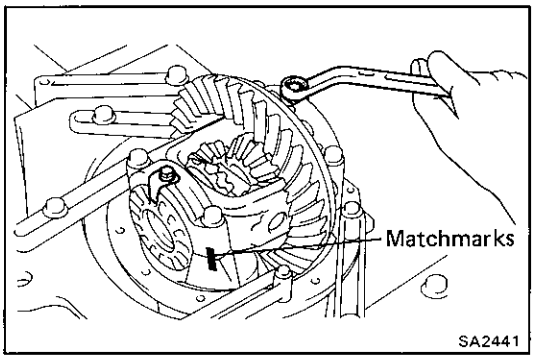

7. REMOVE DIFFERENTIAL CASE

(a) (2 pinion type only)
Place matchmarks on the bearing cap and differential carrier.

(b) Remove the two adjusting nut locks.

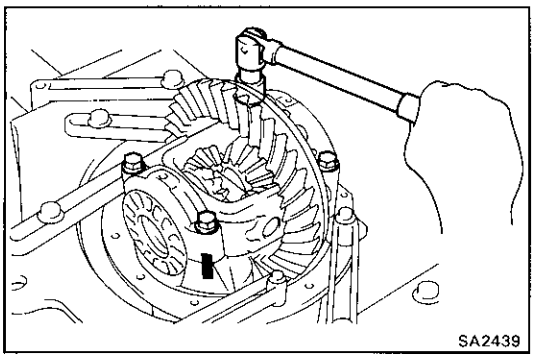

(c) Remove the four bolts and the two bearing caps.

(d) (2 pinion type only)
Remove the two adjusting nuts.

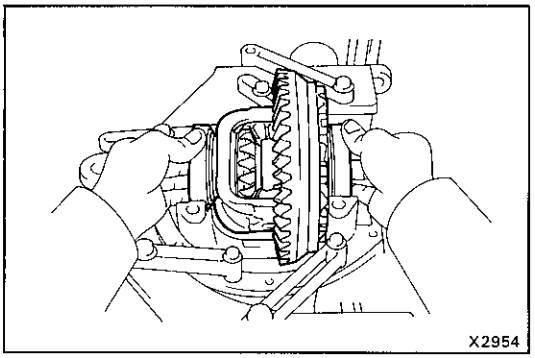

(e) (2 pinion type only)
Remove the differential case with the side bearing outer races from the differential carrier.

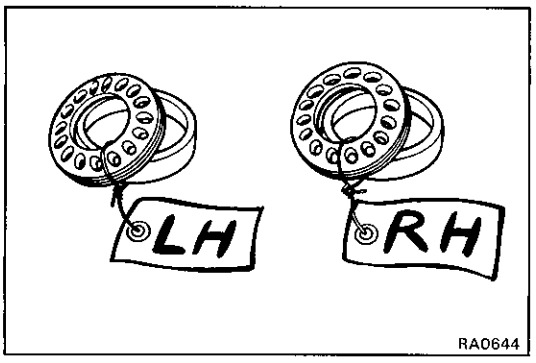

HINT: Tag the disassembled parts to show the location for reassembly.

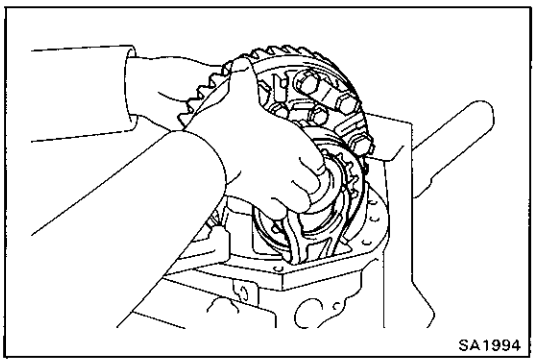

(f) (w/ Differential lock only)
Remove the differential case with both side bearing outer races, adjusting nuts and sleeve from the differential carrier.

(g) (w/ Differential lock only)
Remove the shift fork.

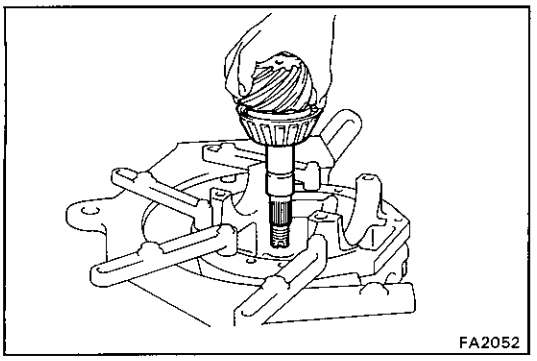

8.-1 (RJ, LJ)
REMOVE DRIVE PINION

Remove the drive pinion with the front bearing.

8.-2 (FJ, PZJ, HZJ, FZJ)
REMOVE DRIVE PINION AND BEARING SPACER

(a) Remove the drive pinion with the front bearing.

(b) Remove the bearing spacer.

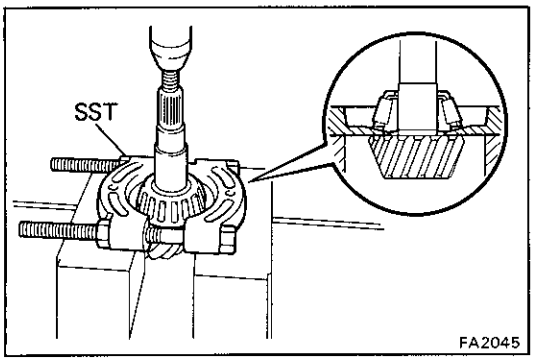

9. REMOVE DRIVE PINION FRONT BEARING

(a) Using SST and a press, remove the bearing from the drive pinion.

SST 09950-00020

HINT: If the drive pinion or ring gear are damaged, replace them as a set.

(b) Remove the washer from the drive pinion.

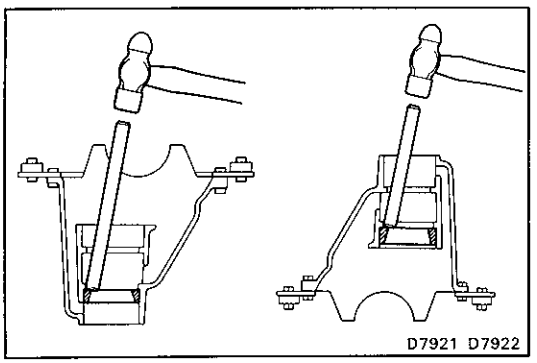

10.-1 (RJ, LJ)
REMOVE FRONT AND REAR BEARING OUTER RACES

Using a hammer and brass bar, drive out the outer race from carrier.

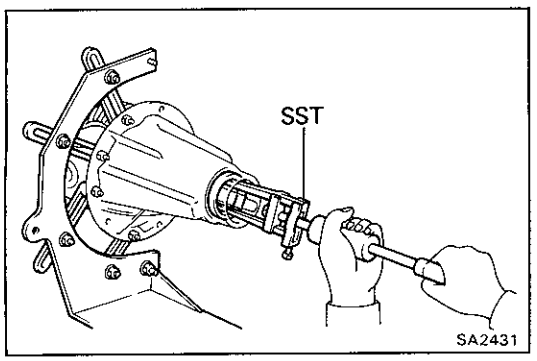

10.-2 (FJ, PZJ, HZJ, FZJ)
REMOVE FRONT, REAR BEARING OUTER RACES AND OIL STORAGE RING

(a) Using SST, remove the bearing outer race.

SST 09308-00010

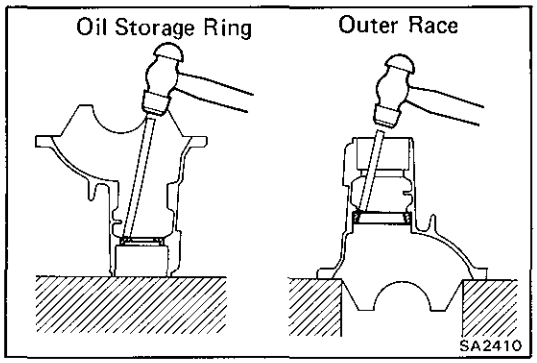

(b) Using a hammer and brass bar, drive out the oil storage ring and outer race from the carrier.

HINT: Do not remove the oil storage ring unless replacing it with a new one.

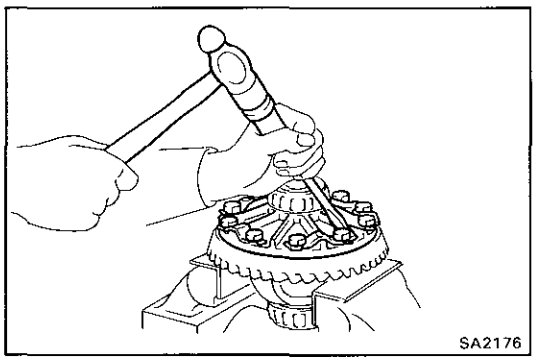

11. REMOVE RING GEAR

(a) Using a screwdriver, unstake the lock plates.

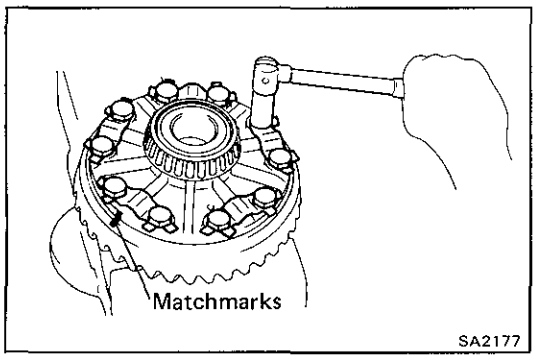

(b) Place matchmarks on the ring gear and differential case.

(c) Remove the ten bolts and five lock plates.

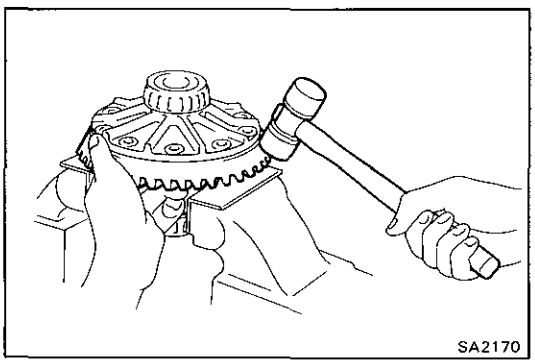

(d) Using a plastic or copper hammer, tap on the ring gear to separate it from the differential case.

12. CHECK DIFFERENTIAL CASE RUNOUT

(a) Place the bearing outer races on their respective bearings. Check that the left and right outer races are not interchanged.

(b) Install the differential case in the differential carrier.

(c) When there is no play left in the side bearings, install the adjusting nuts.

(d) Align matchmarks on the bearing cap and differential carrier.

(e) Install and uniformly tighten the four bearing cap bolts in several passes.

(f) Using a dial indicator, measure the differential case runout.

Maximum runout: 0.07 mm (0.0028 in.)

(g) Remove the differential case.
(See step 7 on page SA-28)

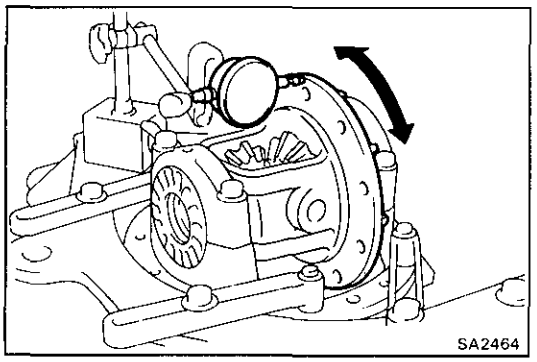

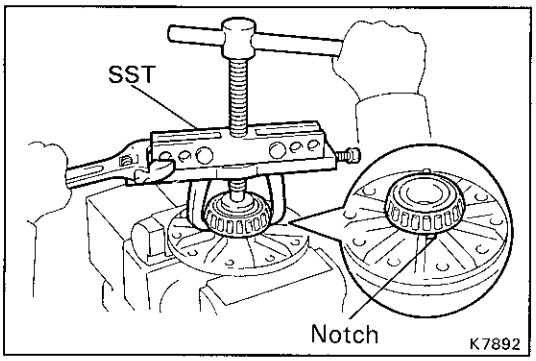

13. REMOVE SIDE BEARINGS

Using SST, remove the side bearing from the differential case.

SST 09950-20017

HINT: Fix the claws of SST to the notch in the differential case.

14. DISASSEMBLE DIFFERENTIAL CASE

2 pinion type: See Pub. No. RM183E, see page SA-81
w/ Differential lock (4 pinion type)
: See Pub. No. RM183E, see page SA-86

ASSEMBLY OF DIFFERENTIAL CARRIER

(See page SA-26)

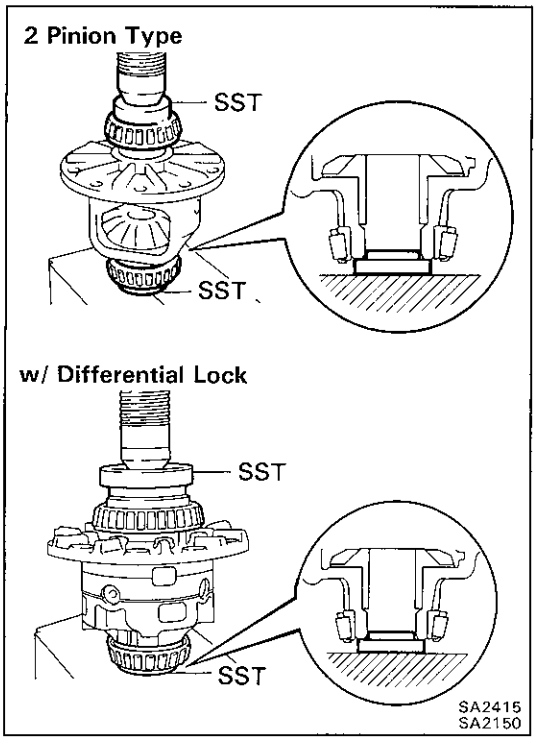

1. INSTALL SIDE BEARINGS

Using SST and a press, install the two side bearings on the differential case.

SST
2 pinion type
09608-30012 (09608-00060, 09608-04060)
w/ Differential lock (4 pinion type)
09223-15020, 09608-30012 (09608-04060)

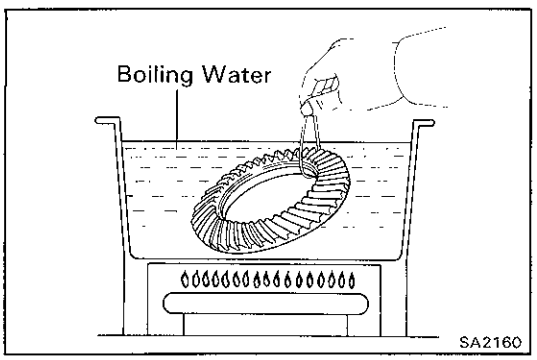

2. INSTALL RING GEAR ON DIFFERENTIAL CASE

(a) Clean the contact surfaces of the differential case and ring gear.

(b) Heat the ring gear in boiling water.

(c) After the moisture on the ring gear has completely evaporated, quickly install the ring gear to the differential case.

HINT: Align matchmarks on the ring gear and the differential case.

(d) Temporarily install five new lock plates and the ten bolts so that the bolt holes in the ring gear and differential case are not misaligned.

NOTICE: The ring gear set bolts should not be tightened until the ring gear has cooled sufficiently.

(e) After the ring gear has cooled sufficiently, torque the ring gear set bolts.

Torque: 97 N·m (985 kgf·cm, 71 ft·lbf)

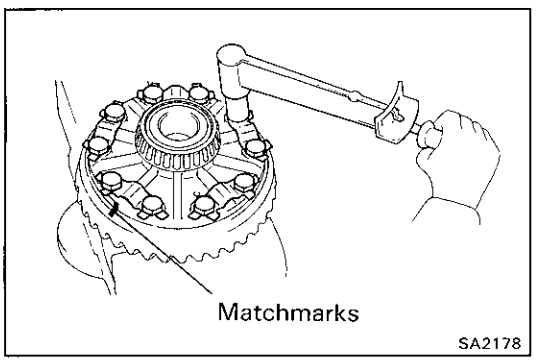

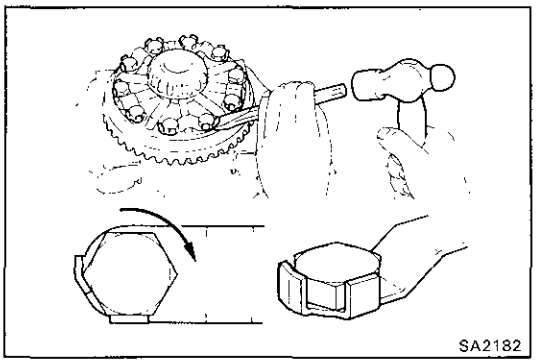

(f) Using a hammer and drift punch, stake the lock plates.

HINT: Stake one claw flush with the flat surface of the nut. For the claw contacting the protruding portion of the nut, stake the half on the tightening side.

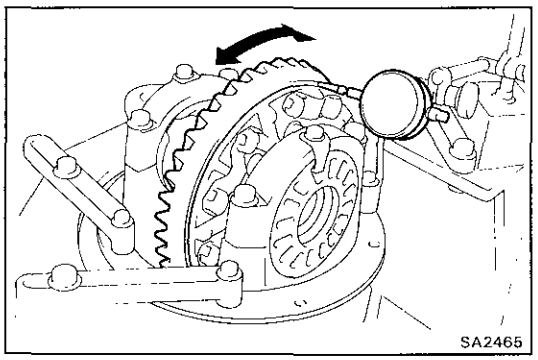

3. CHECK RING GEAR RUNOUT

(a) Install the differential case onto the carrier.

(b) Install bearing caps. (See page SA-38)

(c) *Using a dial indicator, measure the runout of ring gear.*

Maximum runout: 0.10 mm (0.0039 in.)

(d) Remove the differential case.
(See step 7 on page SA-31)

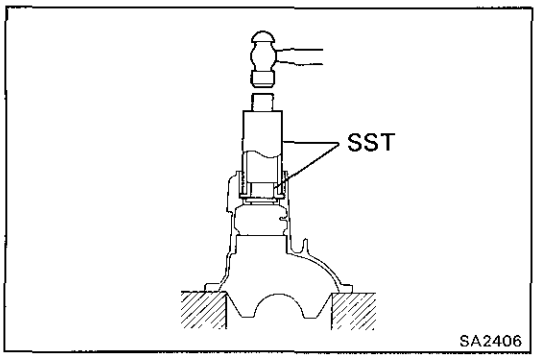

4. (FJ, PZJ, HZJ, FZJ) INSTALL OIL STORAGE RING

Using SST and a hammer, install a new oil storage ring.

SST 09316-60010 (09316-00010, 09316-00020)

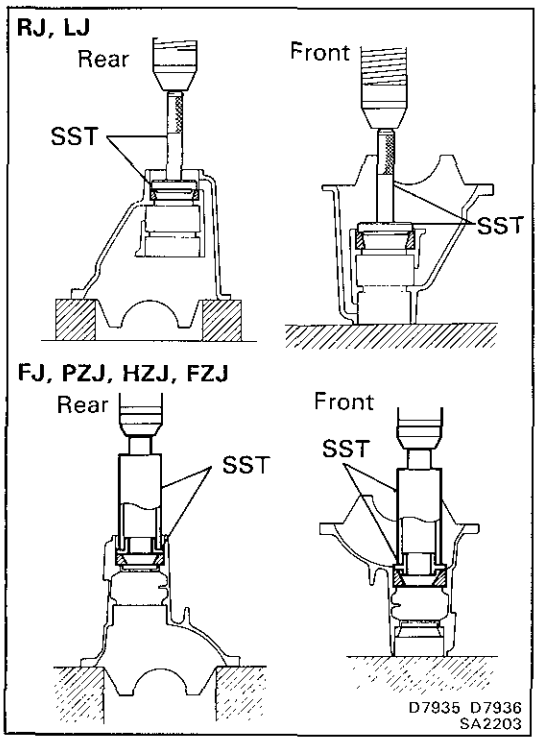

5. INSTALL DRIVE PINION FRONT AND REAR BEARING OUTER RACES

Using SST and a press, install the outer races.

SST 09608-30012 (RJ, LJ)
Rear (09608-04020, 09608-04110)
Front (09608-04020, 09608-04100)
09316-60010 (FJ, PZJ, HZJ, FZJ)
Rear (09316-00010, 09316-00020)
Front (09316-00010, 09316-00050)

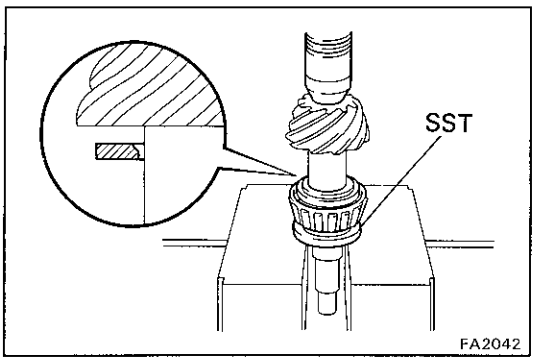

6. INSTALL DRIVE PINION FRONT BEARING

(a) Install the washer on the drive pinion with the chamfered end facing the pinion gear.
HINT: First fit a washer with the same thickness as the washer which was removed, then after checking the teeth contact pattern, replace the washer with one of a different thickness if necessary.

(b) Using SST, press in the front bearing onto the drive pinion.

SST 09506-30012

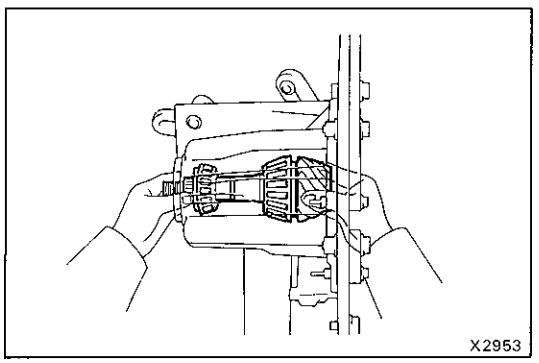

7. TEMPORARILY ADJUST DRIVE PINION PRELOAD

(a) Install the drive pinion, rear bearing and oil slinger.

HINT: Assemble the spacer and oil seal after adjusting the teeth contact pattern.

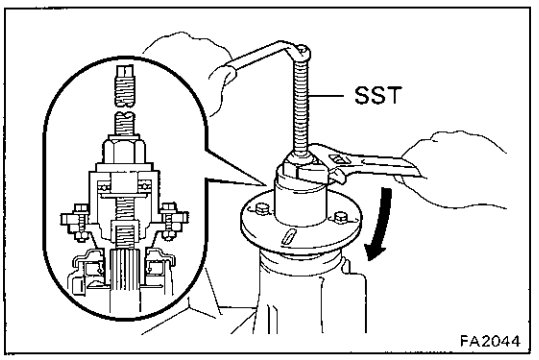

(b) Using SST, install the companion flange.

SST 09557-22022 (09557-22050)

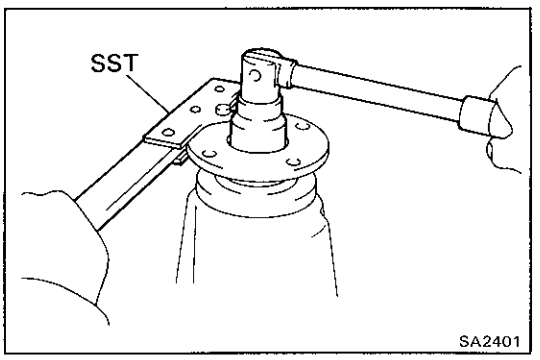

(c) Adjust the drive pinion preload by tightening the plate washer and companion flange nut.

HINT: Using SST to hold the flange, tighten the nut .

SST 09330-00021

NOTICE: As there is no spacer, tighten the nut a little at a time, being careful not to overtighten it.

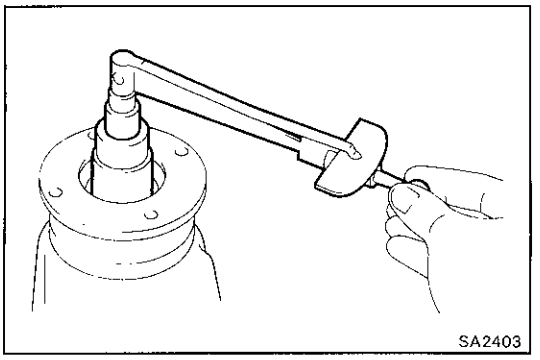

(d) Using a torque meter, measure the preload.

Preload (at starting):

Models	New bearing	Reused bearing
RJ, LJ	1.9 — 2.5 N·m (19 — 26 kgf·cm, 16.5 — 22.6 in.·lbf)	0.9 — 1.3 N·m (9 — 13 kgf·cm, 7.8 — 11.3 in.·lbf)
FJ, PZJ, HZJ, FZJ	0.9 — 1.6 N·m (10 — 16 kgf·cm, 8.7 — 13.9 in.·lbf)	0.5 — 0.8 N·m (5 — 8 kgf·cm, 4.3 — 6.9 in.·lbf)

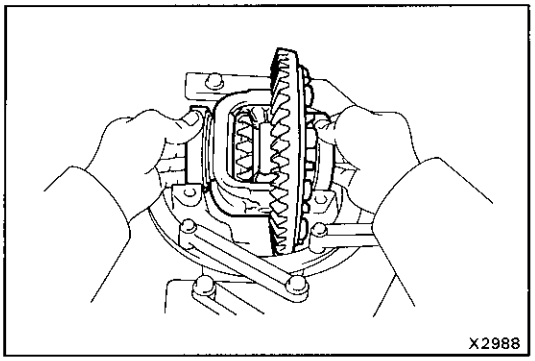
X2988

8. INSTALL DIFFERENTIAL CASE AND ADJUSTING NUTS (2 PINION TYPE)

(a) Place the bearing outer races on their respective bearings. Make sure that the left and right outer races are not interchanged.

(b) Install the case in the carrier.

HINT: Make sure that there is backlash between the ring gear and drive pinion.

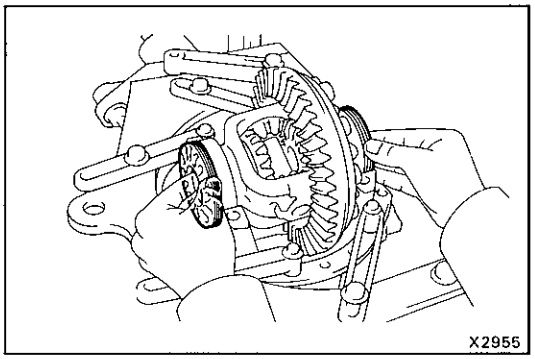
X2955

(c) Install the adjusting nuts on the carrier, making sure that the nuts are threaded properly.

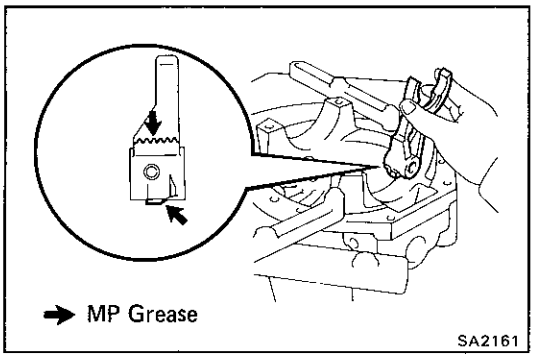

SA2161

(w/ DIFFERENTIAL LOCK)

(a) Apply MP grease on the rack of the shift fork and connecting part of the indicator switch.

(b) Insert the shift fork into the differential carrier as shown.

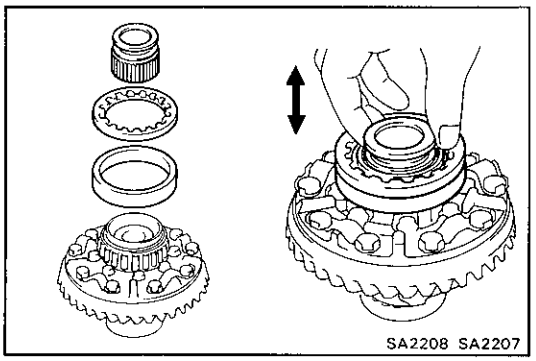
SA2208 SA2207

(c) Install both bearing outer races, adjusting nuts and sleeve to the differential case.

HINT: Check that the sleeve moves smothly.

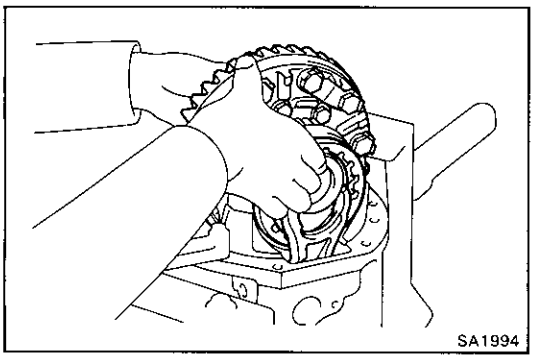
SA1994

(d) Install the shift fork in the groove of the sleeve, holding it by hand, install the case in the carrier.

HINT: Make sure that there is backlash between the ring gear and drive pinion.

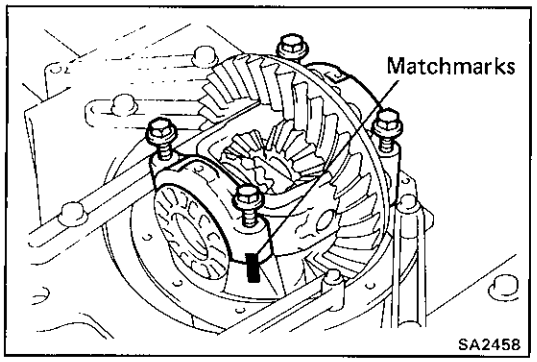

9. INSTALL BEARING CAPS

Align matchmarks on the cap and carrier. Screw in the two bearing cap bolts two or three turns and press down the bearing cap by hand.

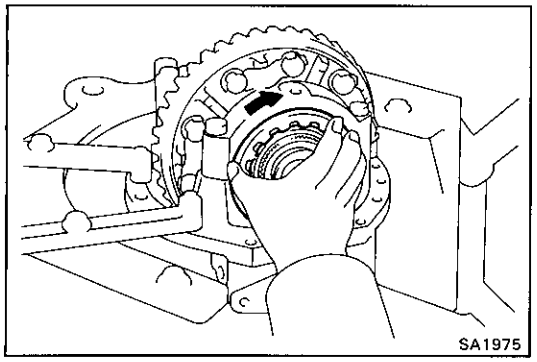

HINT: If the bearing cap does not fit tightly on the carrier, the adjusting nuts are not threaded properly. Reinstall the adjusting nuts if necessary.

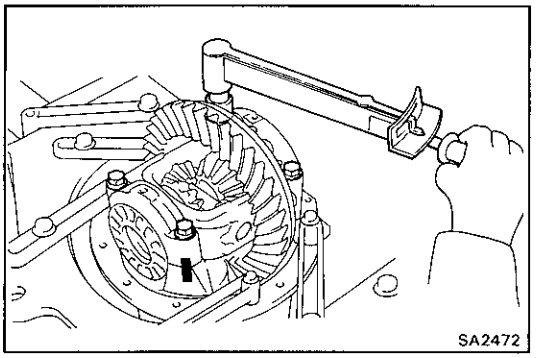

10. ADJUST SIDE BEARING PRELOAD

(a) Tighten the four bearing cap bolts to the specified torque, then loosen them to the point where they can be turned by hand.

Torque: 78 N·m (800 kgf·cm, 58 ft·lbf)

(b) Fully tighten the four bearing cap bolts by hand.

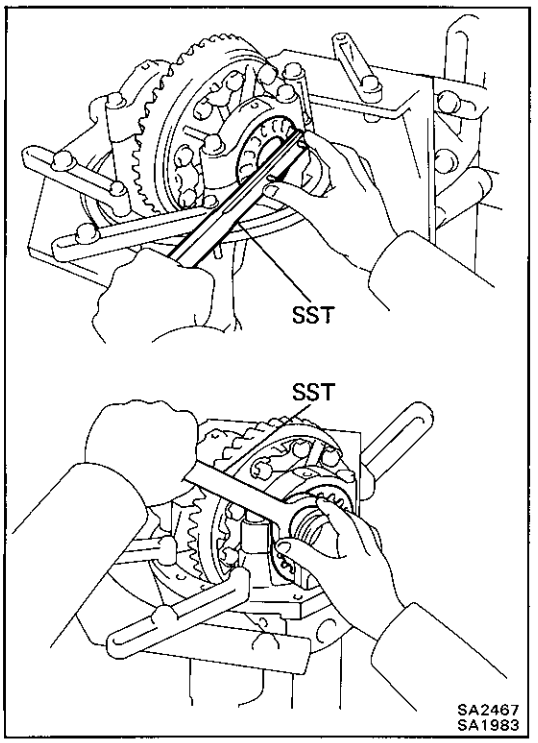

(c) Using SST, tighten the adjusting nut on the ring gear side until the ring gear has a backlash of about 0.2 mm (0.008 in.).

SST 09504-00011 or 09616-30020

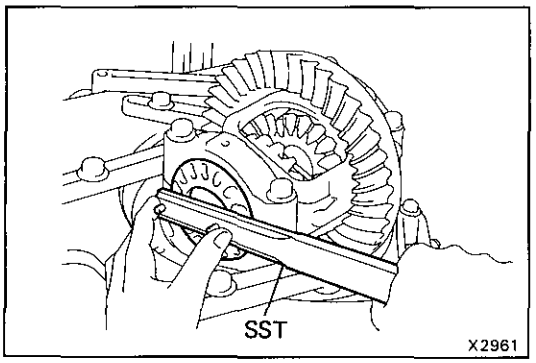

(d) While turning the ring gear, use SST to fully tighten the adjusting nut on the drive pinion side. After the bearings are settled, loosen the adjusting nut on the drive pinion side.

SST 09504-00011

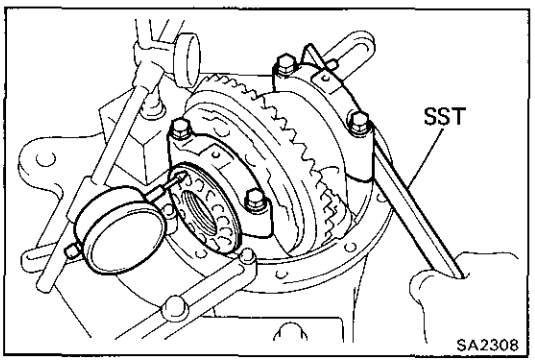

(e) Place a dial indicator on the top of the adjusting nut on the ring gear side.

(f) Adjust the side bearing for zero preload by tightening the other adjusting nut until the pointer on the indicator begins to move.

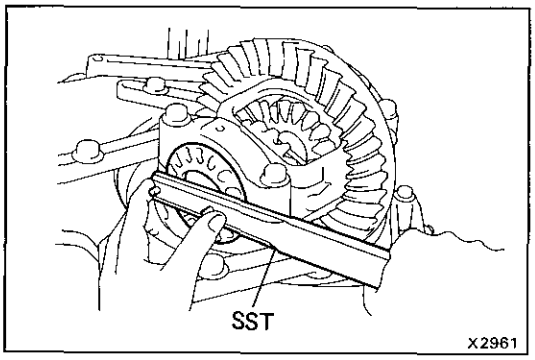

(g) Tighten the adjusting nut 1 - 1 1/2 notches from the zero preload position.

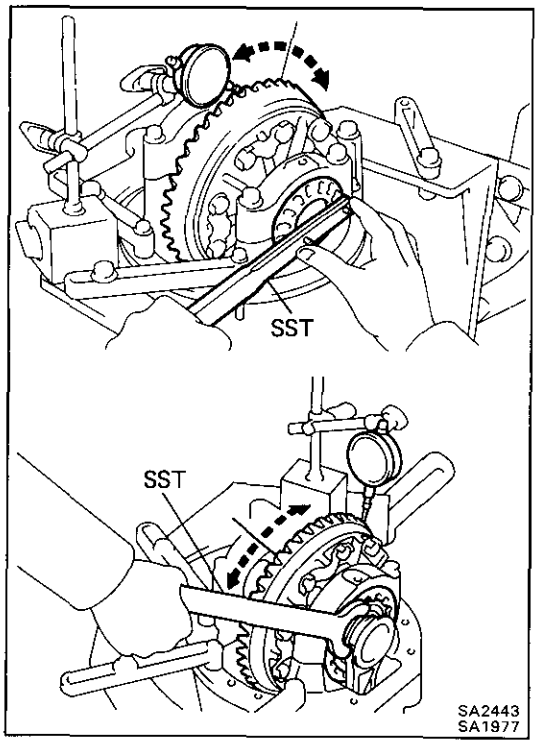

(h) Using a dial indicator, adjust the ring gear backlash until it is within specification.

Backlash: 0.13 — 0.18 mm (0.0051 — 0.0071 in.)

HINT: The backlash is adjusted by turning the left and right adjusting nuts equal amounts. For example, loosen the nut on the left side one notch and tighten the nut on the right side one notch.

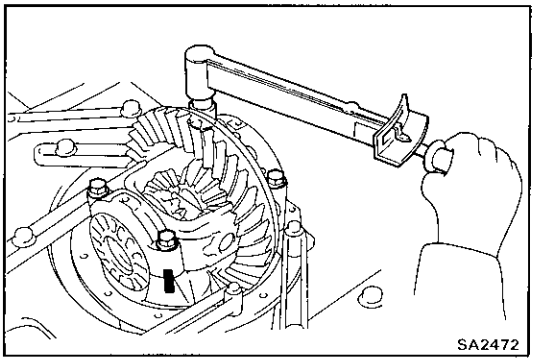

(i) Torque the bearing cap bolts.

Torque: 78 N·m (800 kgf·cm, 58 ft·lbf)

(j) Recheck the ring gear backlash.

Backlash: 0.13 — 0.18 mm (0.0051 — 0.0071 in.)

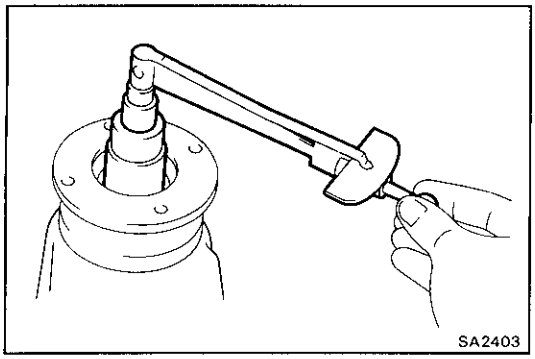

(k) Using a torque meter, measure the total preload.

Total preload (at starting):
Add drive pinion preload
0.4 — 0.6 N·m
(4 — 6 kgf·cm, 3.5 — 5.2 in.·lbf)

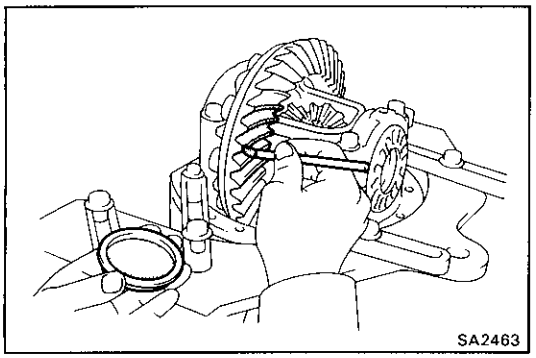

11. INSPECT TEETH CONTACT BETWEEN RING GEAR AND DRIVE PINION

(a) Coat 3 or 4 teeth at three different positions on the ring gear with red lead.

(b) Hold the companion flange firmly and rotate the ring gear in both directions.

(c) Inspect the teeth pattern.

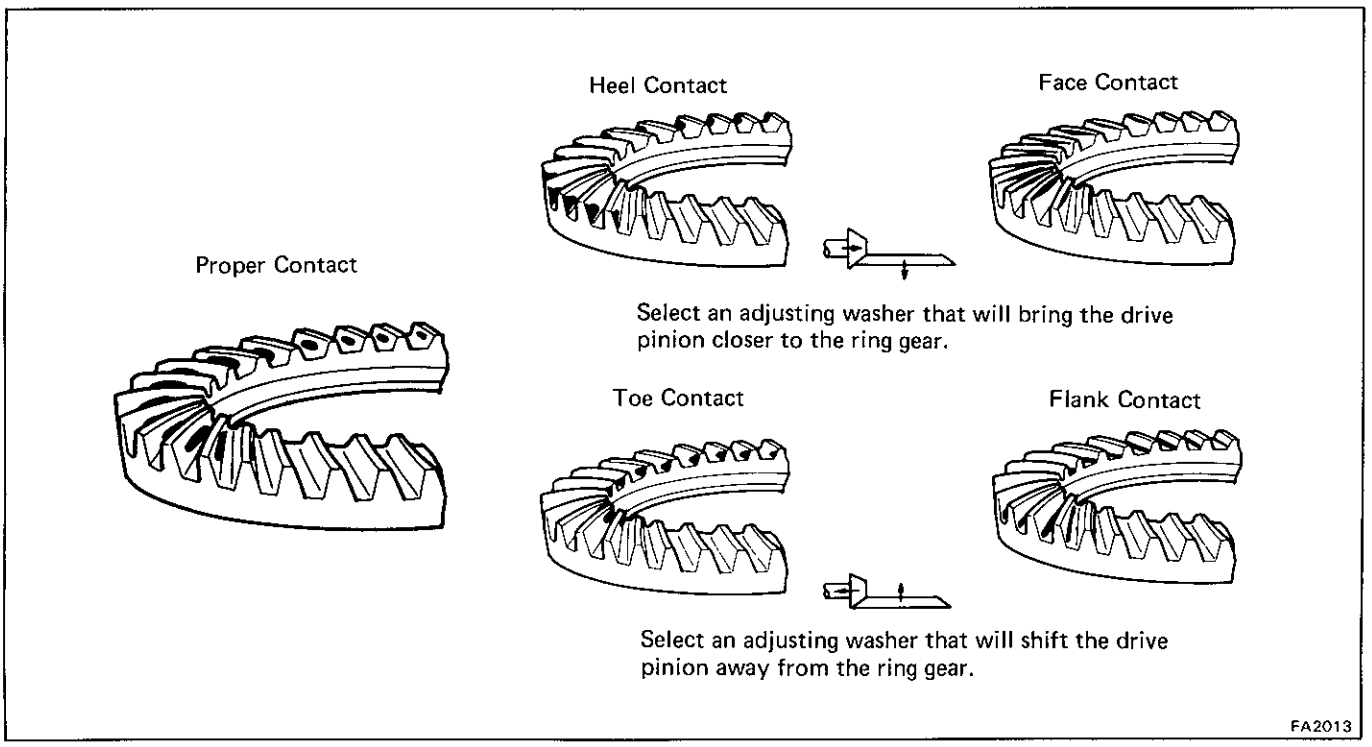

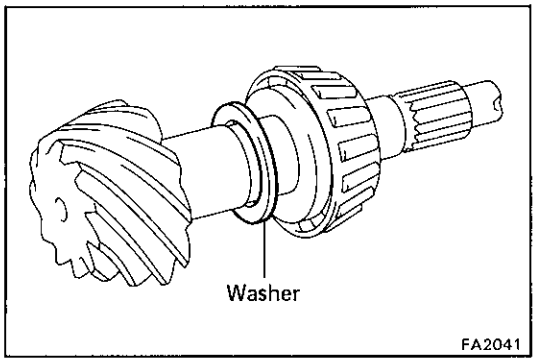

If the teeth are not contacting properly, use the following chart to select a proper washer for correction.

HINT: In the case of face contact or flank contact, it may be possible to make the adjustment within the backlash specification limits.

Washer thickness mm (in.)	
1.70 (0.0669)	2.03 (0.0799)
1.73 (0.0681)	2.06 (0.0811)
1.76 (0.0693)	2.09 (0.0823)
1.79 (0.0705)	2.12 (0.0835)
1.82 (0.0717)	2.15 (0.0846)
1.85 (0.0728)	2.18 (0.0858)
1.88 (0.0740)	2.21 (0.0870)
1.91 (0.0752)	2.24 (0.0882)
1.94 (0.0764)	2.27 (0.0894)
1.97 (0.0776)	2.30 (0.0906)
2.00 (0.0787)	2.33 (0.0917)

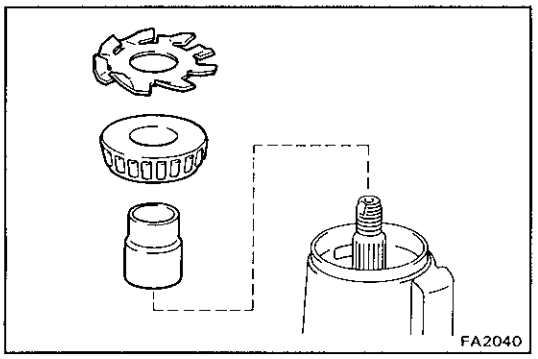

12. INSTALL NEW BEARING SPACER

(a) Remove the companion flange.
(See step 4 on page SA-30)

(b) Remove the oil slinger and rear bearing.
(See steps 5, 6 on pages SA-30, 31)

(c) Install a new bearing spacer.

(d) Install the rear bearing and oil slinger.

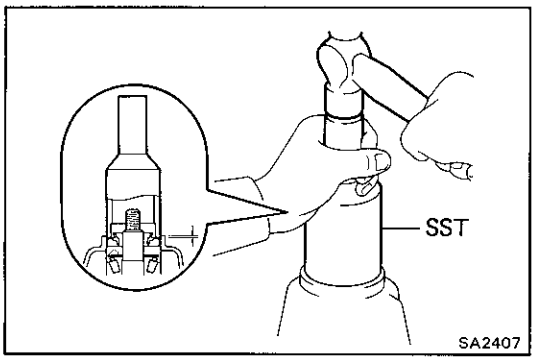

13. INSTALL OIL SEAL

(a) Using SST and a hammer, install a new oil seal.

SST 09554-30011 (RJ, LJ)
09214-76011 (FJ, PZJ, HZJ, FZJ)

Oil seal drive in depth: 1.0 mm (0.039 in.)

(b) Coat the lip of oil seal with MP grease.

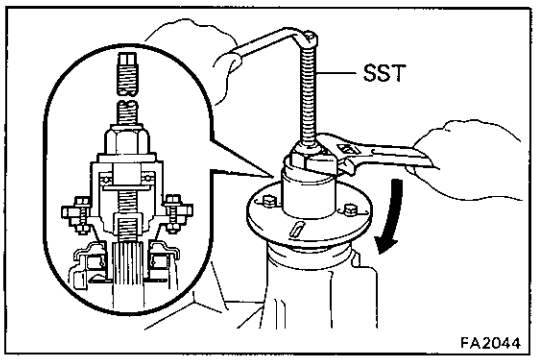

14. INSTALL COMPANION FLANGE

(a) Using SST, install the companion flange.

SST 09557-22022 (09557-22050)

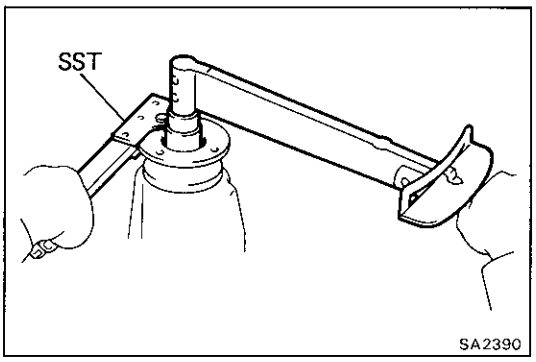

(b) Install the plate washer and a new nut.

HINT: Coat the threads of nut with gear oil.

(c) Using SST to hold the flange, tighten the nut.

SST 09330-00021

Torque: 196 N·m (2,000 kgf·cm, 145 ft·lbf)

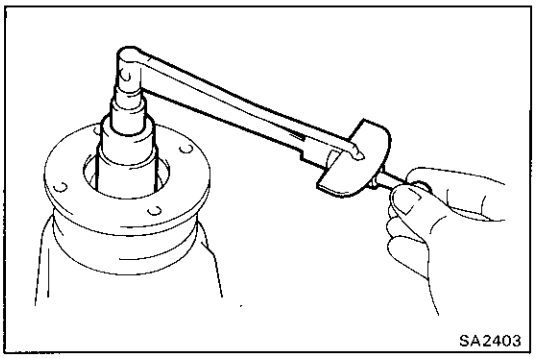

15. ADJUST DRIVE PINION PRELOAD

Using a torque meter, measure the preload of the backlash between the drive pinion and ring gear.

Preload (at starting):

Models	New bearing	Reused bearing
RJ, LJ	1.9 — 2.5 N·m (19 — 26 kgf·cm, 16.5 — 22.6 in.·lbf)	0.9 — 1.3 N·m (9 — 13 kgf·cm, 7.8 — 11.3 in.·lbf)
FJ, PZJ, HZJ, FZJ	0.9 — 1.6 N·m (10 — 16 kgf·cm, 8.7 — 13.9 in.·lbf)	0.5 — 0.8 N·m (5 — 8 kgf·cm, 4.3 — 6.9 in.·lbf)

- If the preload is greater than specification, replace the bearing spacer.
- If the preload is less than specification, retighten the nut 13 N·m (130 kgf·cm, 9 ft·lbf) a little at a time until the specified preload is reached.

If the maximum torque is exceeded while retightening the nut, replace the bearing spacer and repeat the preload procedure. Do not back off the pinion nut to reduce the preload.

Maximum torque: 343 N·m (3,500 kgf·cm, 253 ft·lbf)

If everything is normal, coat the threads with gear oil, then repeat the above operation.

16. RECHECK RING GEAR BACKLASH

(See step 3 on page SA-27)

17. RECHECK TEETH CONTACT BETWEEN RING GEAR AND DRIVE PINION

(See step 11 on page SA-40)

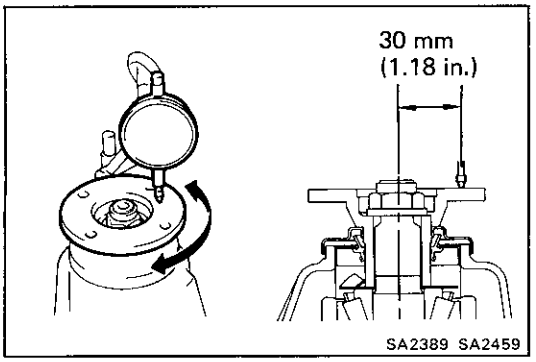

18. CHECK RUNOUT OF COMPANION FLANGE

Using a dial indicator, measure the vertical and lateral runout of the companion flange.

Maximum vertical runout: 0.10 mm (0.0039 in.)

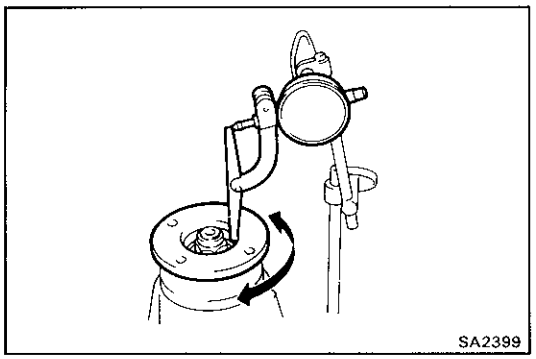

Maximum lateral runout: 0.10 mm (0.0039 in.)

If the runout is greater than the maximum, inspect the bearing.

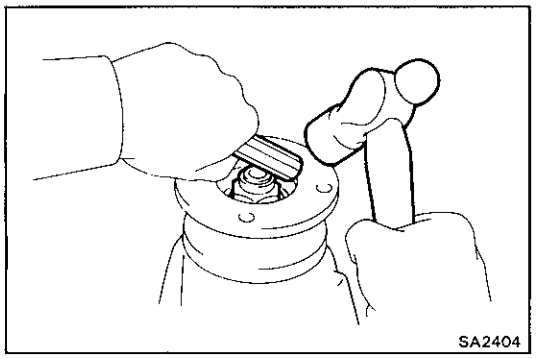

19. STAKE DRIVE PINION NUT

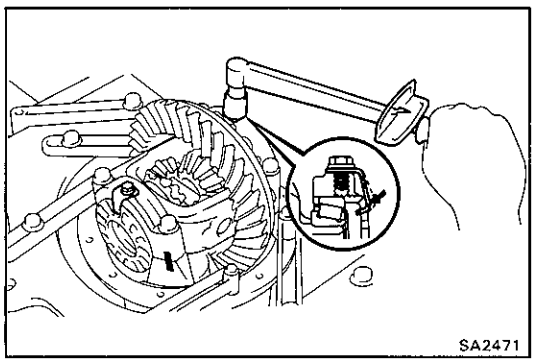

20. INSTALL ADJUSTING NUT LOCKS

(a) Install two new nut locks on the bearing caps.

Torque: 13 N·m (130 kgf·cm, 9 ft·lbf)

(b) After tightening the bolts, bend the nut locks.

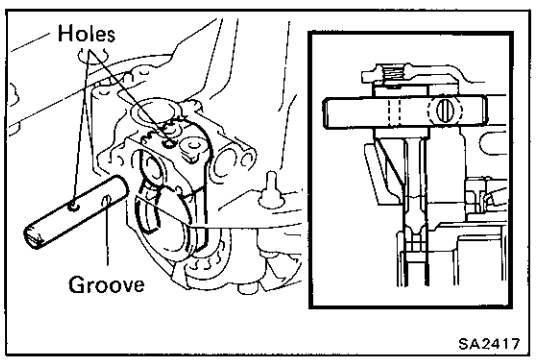

21. (w/ DIFFERENTIAL LOCK) INSTALL SHIFT FORK SHAFT

(a) Apply MP grease onto the outer circuit of the fork shaft.

(b) Install the fork shaft to match the hole of the shift fork and that of the shift fork shaft.

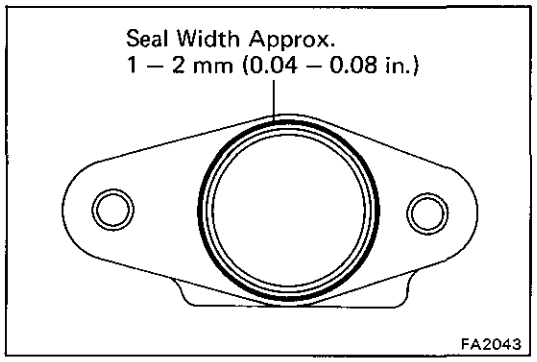

(c) Remove any packing material and be careful not to drop oil on the contacting surface of the differential carrier and shaft retainer.

(d) Apply seal packing to the carrier as shown.

Seal packing: Part No. 08826-00090, THREE BOND 1281 or equivalent

HINT: Install the shaft retainer within ten minutes after applying seal packing.

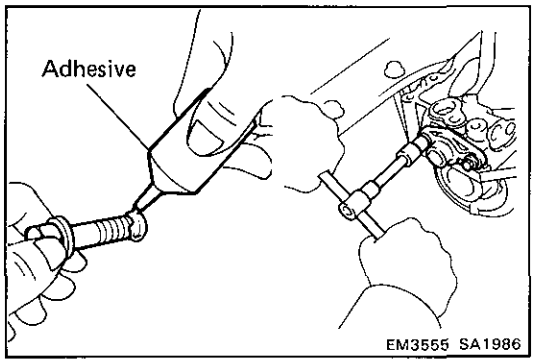

(e) Clean the threads of the bolts and retainer bolts holes with toluene or trichloroethylene.

(f) Apply adhesive to the bolt threads.

Adhesive: Part No. 08833-00080, THREE BOND 1344 LOCTITE 242 or equivalent

(g) Tighten the shaft retainer with the two bolts.

Torque: 24 N·m (240 kgf·cm, 17 ft·lbf)

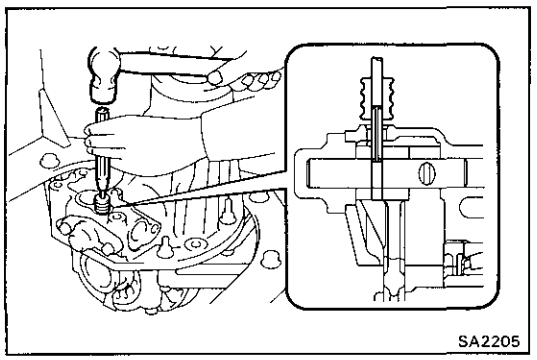

(h) Using a pin punch and hammer, drive in the slotted spring pin to the shift fork.

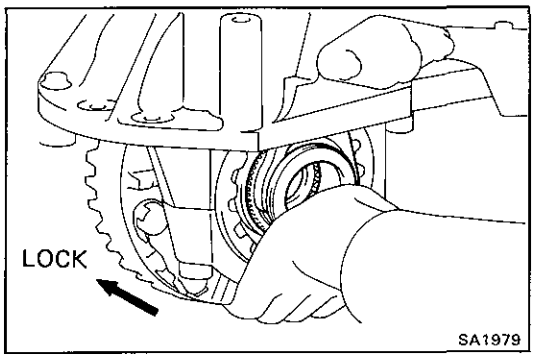

(i) Shift the shift fork deeply and keep the differential lock condition.

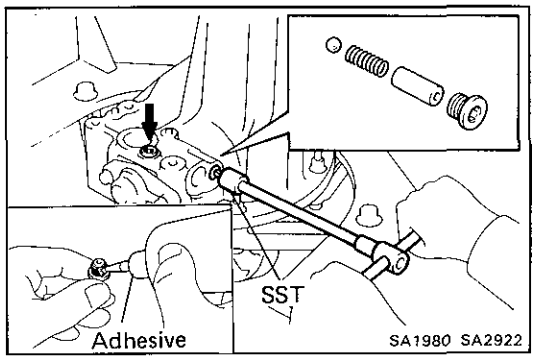

(j) Clean the threads of the plugs and plug holes with toluene or trichoroethylene.

(k) Install the ball, compression spring and spring seat.

(l) Apply adhesive to the plug threads.

Adhesive: Part No. 08833-00080, THREE BOND 1344, LOCTITE 242 or equivalent

(m) Using SST, install and tighten the screw plugs.

SST 09313-30021

Torque: 22 N·m (220 kgf·cm, 16 ft·lbf)

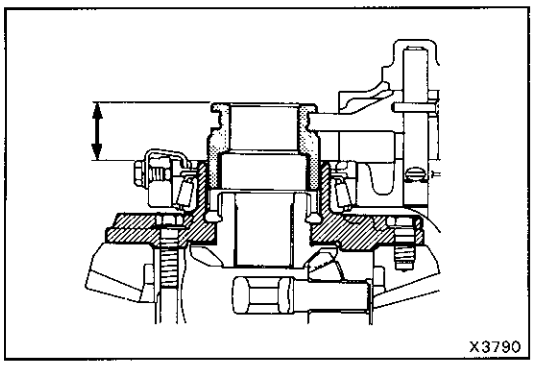
X3790

22. **(w/ DIFFERENTIAL LOCK)**
MEASURE DISTANCE BETWEEN SLEEVE AND DIFFERENTIAL CASE END SIDE

Measure the distance between the sleeve and the tip of the differential case when differential is free and locked.

Standard distance:

LOCK	**32.40 — 33.90 mm (1.2756 — 1.3346 in.)**
FREE	**17.44 — 18.86 mm (0.6866 — 0.7425 in.)**

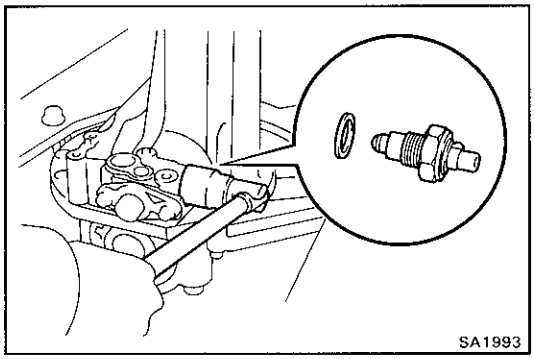
SA1993

23. **(w/ DIFFERENTIAL LOCK)**
INSTALL INDICATOR SWITCH

Install the indicator switch with a new gasket.

Torque: 40 N·m (410 kgf·cm, 30 ft·lbf)

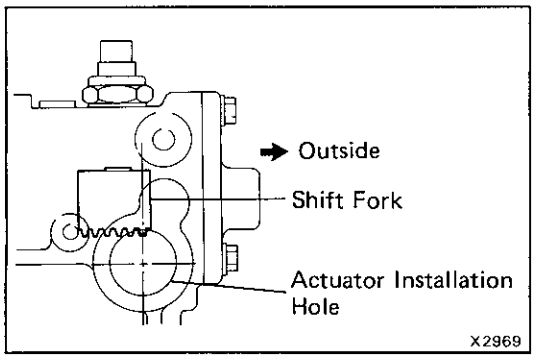

X2969

24. **(w/ DIFFERENTIAL LOCK)**
INSTALL ACTUATOR

(a) Check that the outermost rack tooth of the shift fork is virtually above the center line of the actuator installation hole.

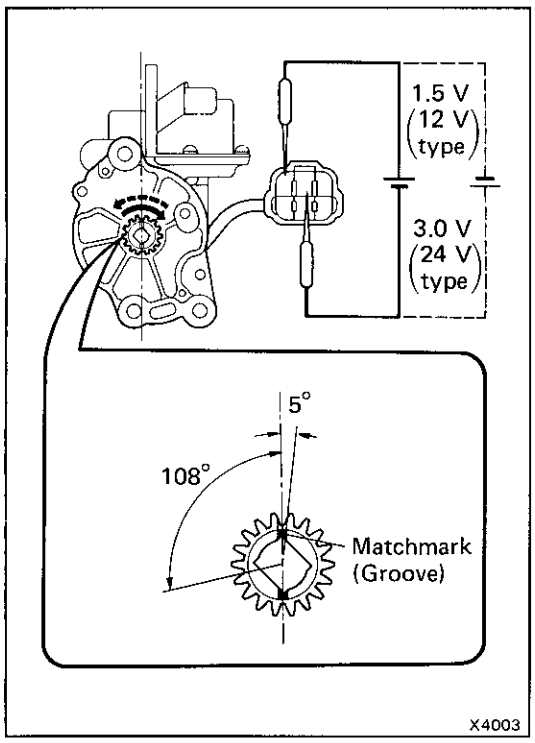

X4003

(b) Make sure that the matchmark of the pinion on the actuator is in between 0° to 5° degrees clockwise from the center line of the actuator.

HINT:

- Using a dry cell battery (12 V type is 1.5 V, 24 V type is 3.0 V), fit the matchmark on the actuator pinion to the center line of the actuator.
- Do not add battery voltage directly between terminals.
- When the matchmark comes to the end of rotation, do not electrify any longer.

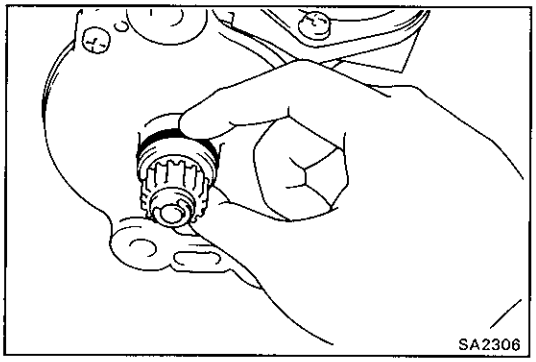

(c) Install a new O-ring to the actuator.

(d) Apply a light coat of gear oil on the O-ring.

(e) Apply MP grease to the gear part.

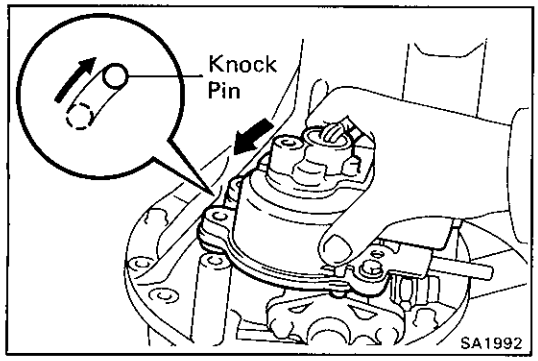

(f) Insert the actuator so that the long hole on the actuator side fits with the knock pin on the carrier side.

HINT: Do not damage the O-ring of the actuator.

(g) Align the actuator with the long hole and rotate the actuator counterclockwise when the knock pin reaches the right-hand side.

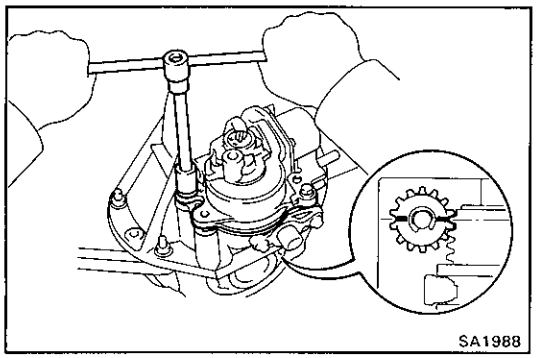

(h) Install the actuator to the differential carrier with bolt so that the outermost rack tooth of the shift fork shall fit the matchmark of the pinion of the actuator.

Torque: 26 N·m (270 kgf·cm, 20 ft·lbf)