REAR DIFFERENTIAL / 8 INCH TYPE

On-Vehicle Replacement of Front Oil Seal

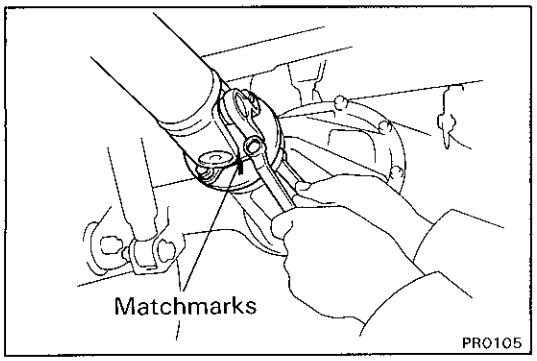

1. **DISCONNECT REAR PROPELLER SHAFT**
   (a) Place matchmarks on the flanges.
   (b) Remove the four bolts and nuts.

2. **REMOVE COMPANION FLANGE**
   (See Pub. No. RM183E, See page SA-52)

3. **REMOVE OIL SEAL AND OIL SLINGER**
   (See Pub. No. RM183E, See page SA-52)

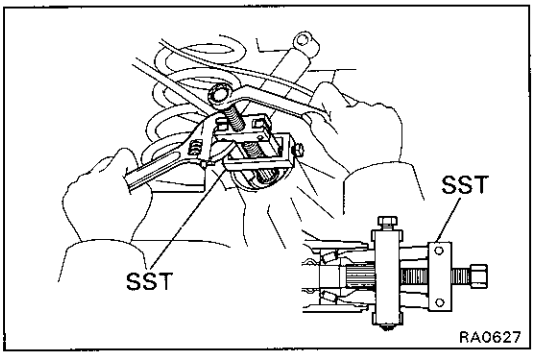

4. **REMOVE FRONT BEARING AND BEARING SPACER**
   (a) Using SST, remove the front bearing from the drive pinion.
   SST 09556-22010
   (b) Remove the bearing spacer.

5. **INSTALL NEW BEARING SPACER AND FRONT BEARING**

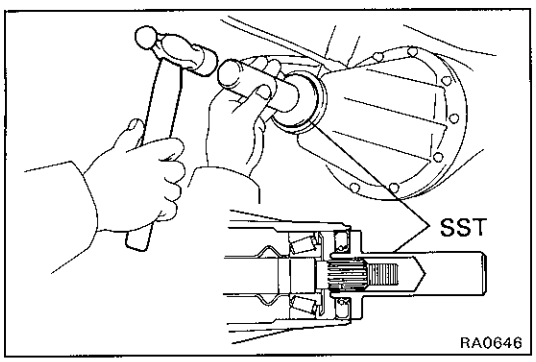

6. **INSTALL OIL SLINGER AND NEW OIL SEAL**
   (a) Install the oil slinger facing as shown.
   (b) Using SST, drive in a new oil seal as shown.
   SST 09554-30011 (w/o Differential Lock)
   09214-76011 (w/ Differential Lock)
   Oil seal drive in depth: 1.0 mm (0.039 in.)
   (c) Apply MP grease to the oil seal lip.

7. **INSTALL COMPANION FLANGE**
(See Pub. No. RM183E, See page SA-54)

8. **CHECK DRIVE PINION PRELOAD**
(See Pub. No. RM183E, See page SA-54)

9. **STAKE DRIVE PINION NUT**

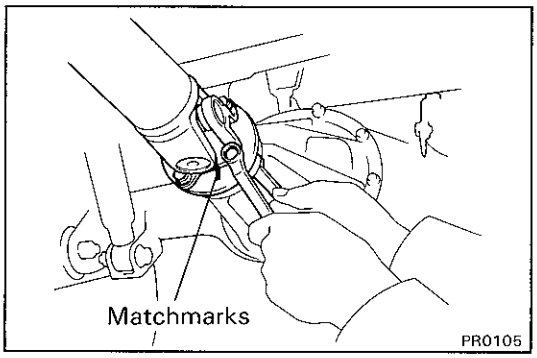

10. **CONNECT REAR PROPELLER SHAFT**
   (a) Align matchmarks on the flanges and connect the flanges with four bolts, spring washers and nuts.
   (b) Torque the bolts and nuts.

   Torque: 88 N·m (900 kgf·cm, 65 ft·lbf)

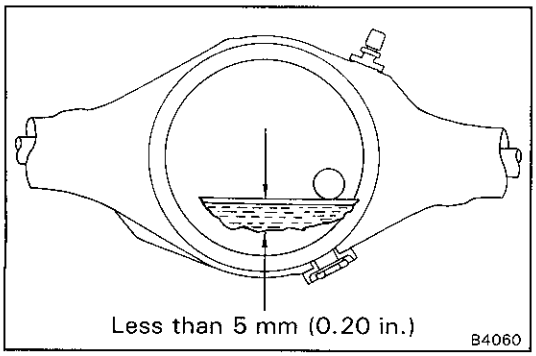

11. **CHECK DIFFERENTIAL OIL LEVEL**

   Fill with hypoid gear oil if necessary.

   Oil type:
   w/o LSD API GL-5
   w/ LSD API GL-5 for LSD

   Recommended oil viscosity:
   Above — 18°C (0°F) SAE 90
   Below — 18°C (0°F) SAE 80W or 80W-90

   Capacity: 1.85 liters (2.0 US qts, 1.6 Imp. qts)