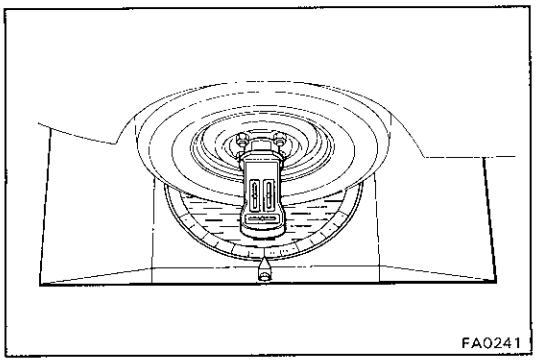
FA0241

Front Wheel Alignment

INSPECT AND ADJUSTMENT OF FRONT WHEEL ALIGNMENT

1. INSTALL WHEEL ALIGNMENT EQUIPMENT

Follow the specific instructions of the equipment manufacturer.

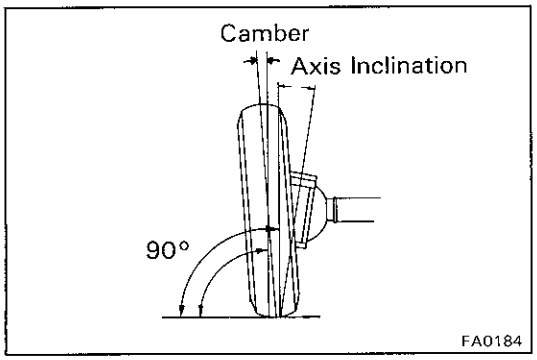

FA0184

2. INSPECT CAMBER AND STEERING AXIS INCLINATION

Camber:	**1°00′ ± 45′**
Cross camber:	**30′ or less**
Steering axis inclination:	**13°00′ ± 45′**

If the steering axis inclination is not as specified after camber have been correctly adjusted, recheck the steering knuckle and front wheel for bending or looseness.

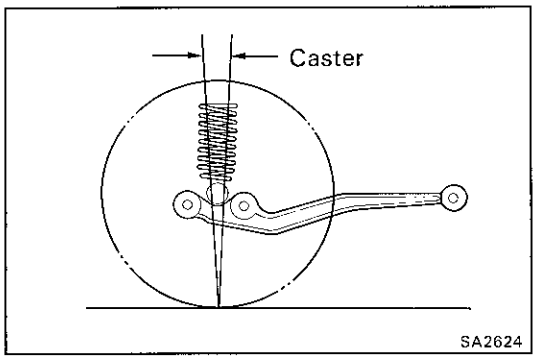

SA2624

3. INSPECT CASTER

Tire size	Caster
31 × 10.50R15LT-6 265/75R15	1°40′ ± 45′
Others	3°00′ ± 45′

If caster is not as specified, inspect and replace damaged or worn parts.

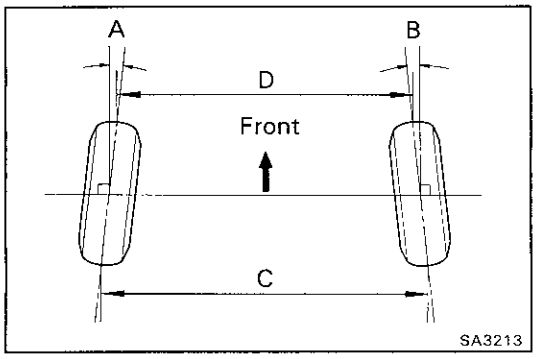

SA3213

4. INSPECT TOE-IN

Toe-in (total):

Tire type	A + B	C − D
Bias tire	0.4° ± 0.2°	4 ± 2 mm (0.16 ± 0.08 in.)
Radial tire	0.2° ± 0.2°	2 ± 2 mm (0.08 ± 0.08 in.)

If toe-in is not specification, adjust by left and right tie rods.

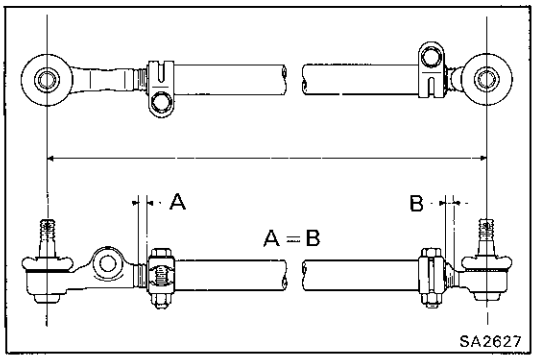

SA2627

5. ADJUST TOE-IN

(a) Loosen the clamp bolts and nuts.

(b) Adjust toe-in by turning the left and right tie rod tubes an equal amount.

(c) Insure that the lengths of the tie rod ends are the same.

(d) Torque the tie rod, clamp bolts.

Torque: 37 N·m (375 kgf·cm, 27 ft·lbf)

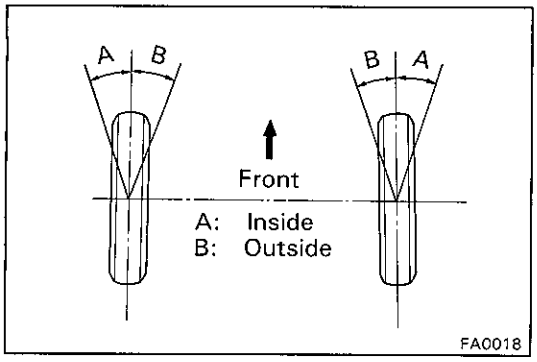

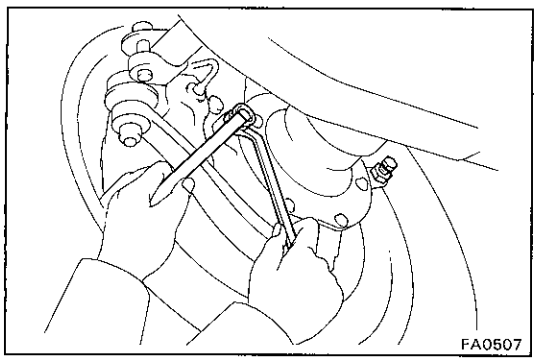

6. ADJUST WHEEL ANGLE

Remove the caps of the knuckle stopper bolts and check the steering angles.

Wheel Angle			
Steering Type		PS	MS
Max.	Inside Wheel	$35^\circ {}^{+0^\circ}_{-3^\circ}$	$32^\circ {}^{+0^\circ}_{-3^\circ}$
	Outside Wheel	31°	29°

HINT: When the steering wheel is fully turned, make sure that the wheel is not touching the body or brake flexible hose.

If maximum steering angles differ from standard value, adjust the wheel angle with the knuckle stopper bolts.

Torque: 44 N·m (480 kgf·cm, 33 ft·lbf)

If the wheel angle still cannot be adjusted within limits, inspect and replace damaged or worn steering parts.