REAR AXLE SHAFT AND AXLE HUB (Full-Floating Type)

COMPONENTS

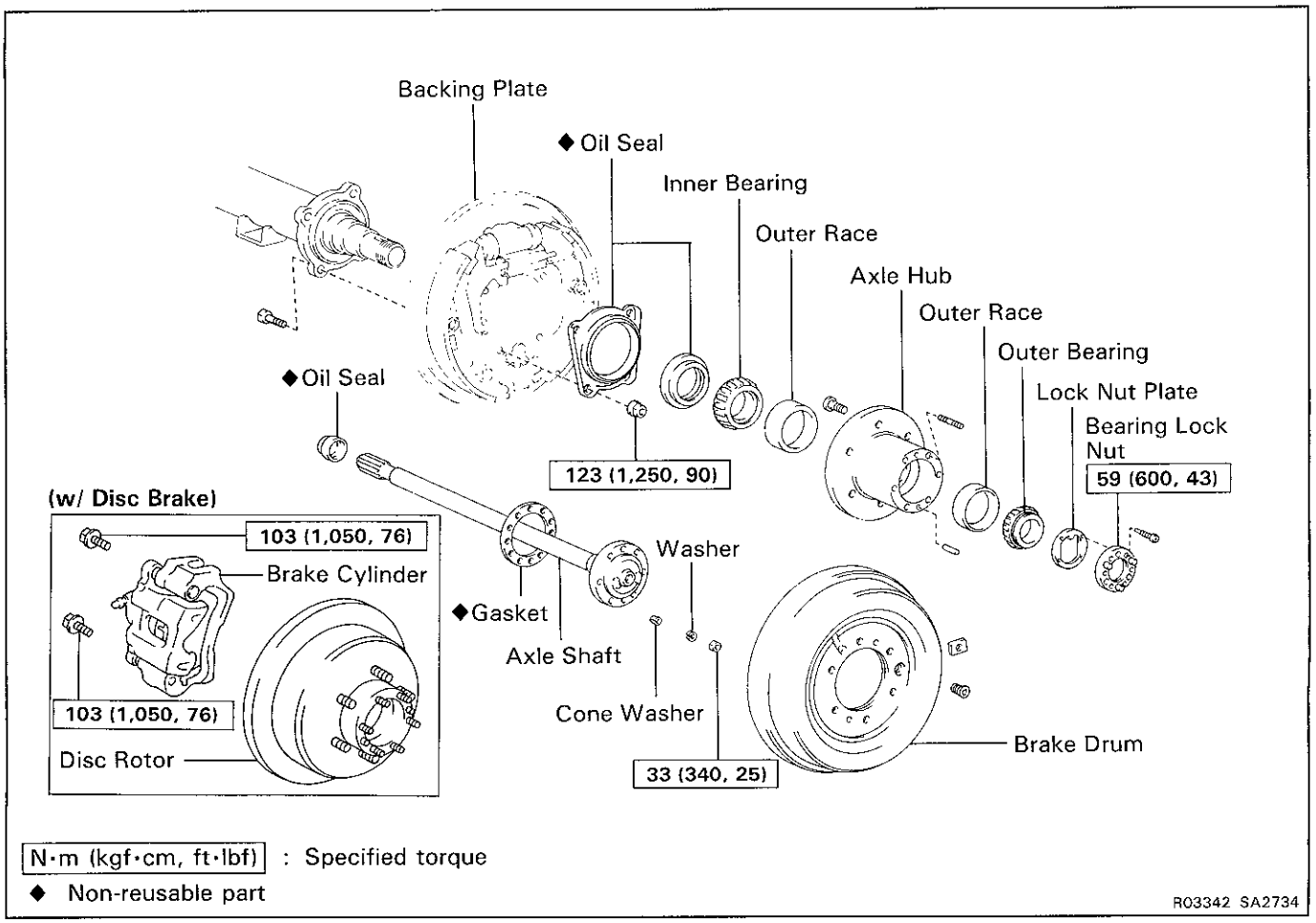

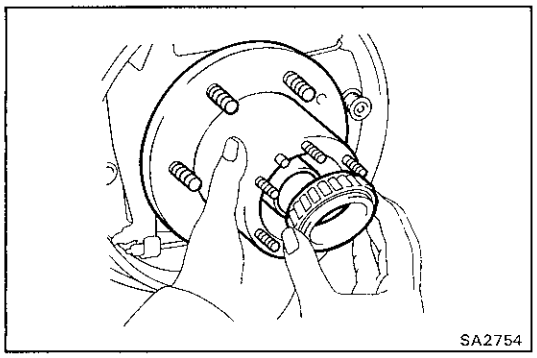

INSTALLATION OF REAR AXLE HUB

1. INSTALL AXLE HUB

(a) Install the backing plate and oil seal to the axle housing with the four bolts and nuts.

(b) Install the axle hub to the axle housing.

NOTICE: Be careful not to damage the oil seal.

(c) Install the outer bearing.

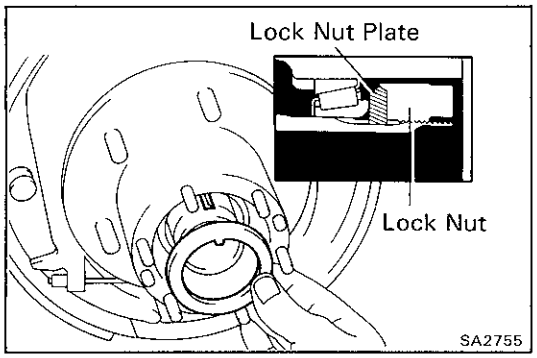

2. INSTALL LOCK NUT PLATE AND BEARING LOCK NUT

(a) After fully pushing in the outer bearing, position the protrusion of the lock nut plate into the axle housing groove.

(b) Temporarily install the bearing lock nut.

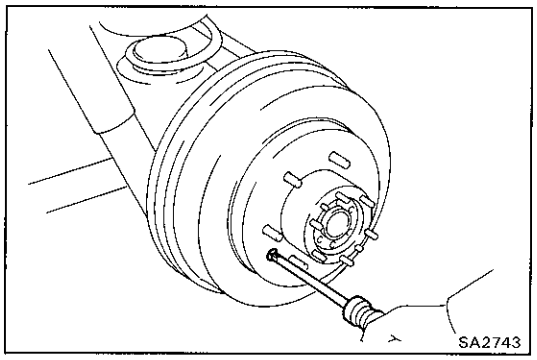

3. **(w/ DRUM BRAKE TYPE)**
INSTALL BRAKE DRUM

(a) Install the brake drum to the axle hub.

(b) Install the screw to the brake drum.

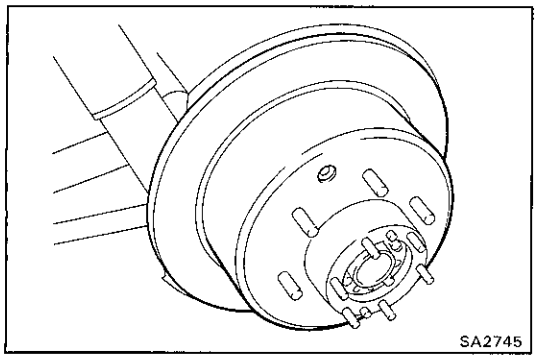

4. **(w/ DISC BRAKE TYPE)**
INSTALL ROTOR DISC

Install the rotor disc to the axle hub.

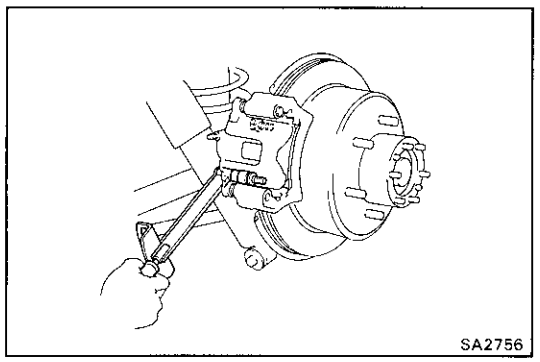

5. **(w/ DISC BRAKE TYPE)**
INSTALL DISC BRAKE ASSEMBLY

Install the brake cylinder with torque plate to the rear carrier with the two bolts.

Torque: 103 N·m (1,050 kgf·cm, 76 ft·lbf)

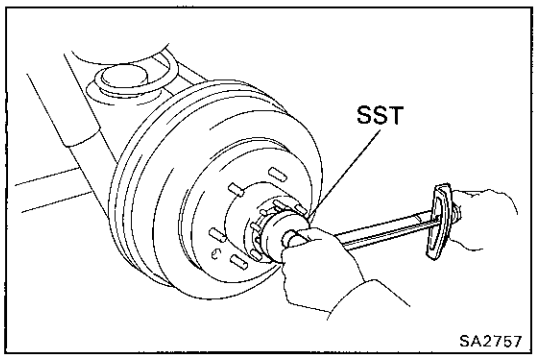

6. **ADJUST PRELOAD**

(a) Using SST, torque the bearing lock nut.

SST 09509-25011

Torque: 59 N·m (600 kgf·cm, 43 ft·lbf)

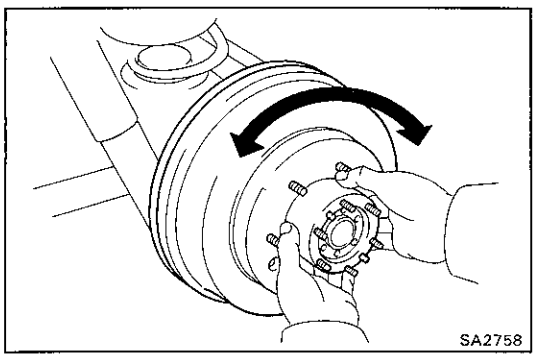

(b) Snug down the bearing by turning the hub several times.

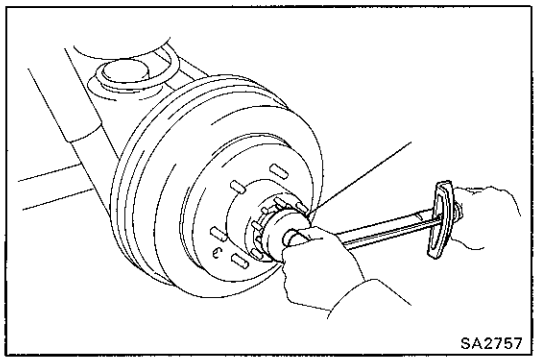

(c) Using SST, tighten the bearing lock nut.

SST 09509-25011

Torque: 59 N·m (600 kgf·cm, 43 ft·lbf)

(d) Using SST, loosen the bearing lock nut until you can rotate it by hand.

SST 09509-25011

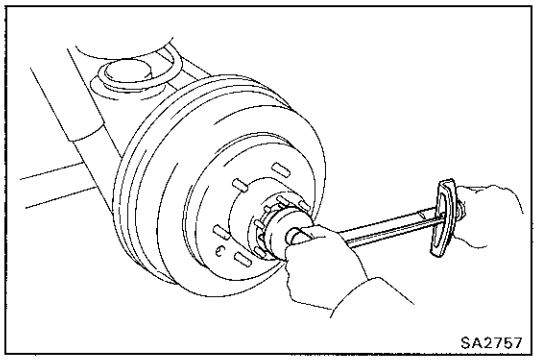

(e) Using SST, retighten the bearing lock nut.

SST 09509-25011

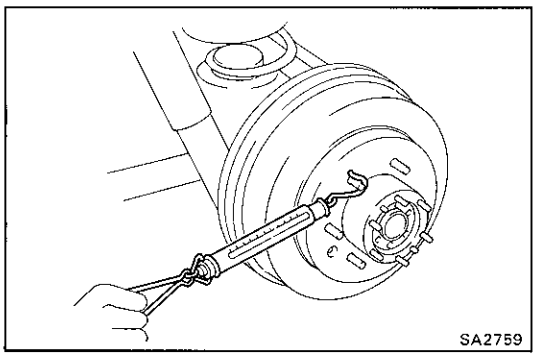

(f) Using a spring tension gauge, measure the preload at the hub bolt.

Rear wheel bearing preload (at starting):
25.4 — 55.9 N (2.6 — 5.7 kgf, 5.7 — 12.6 lbf)

If preload is not with in specification, the procedure above must be repeated.

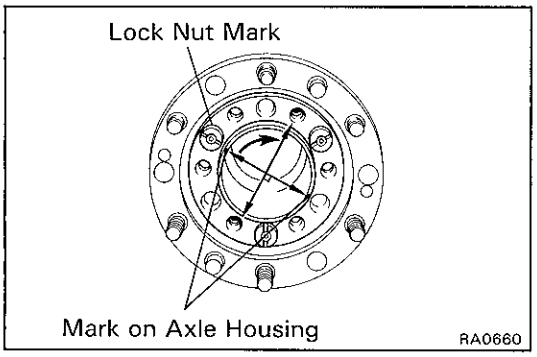

(g) Align the lock nut mark with one of the marks on the axle housing, and place lock screws in the holes at right angles to the lock nut.

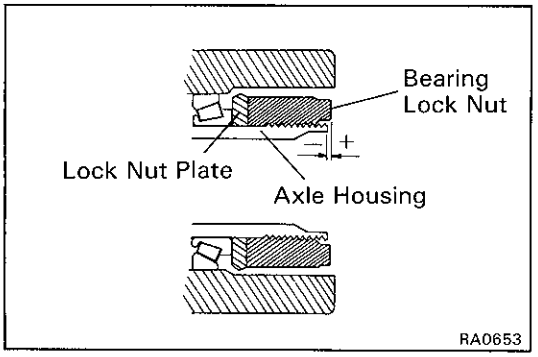

(h) Measure the distance between the top surface of axle housing and the lock nut.

Standard distance: —0.2 — 0.9 mm
(—0.008 — 0.035 in.)

If not within specification, reinstall the axle hub.

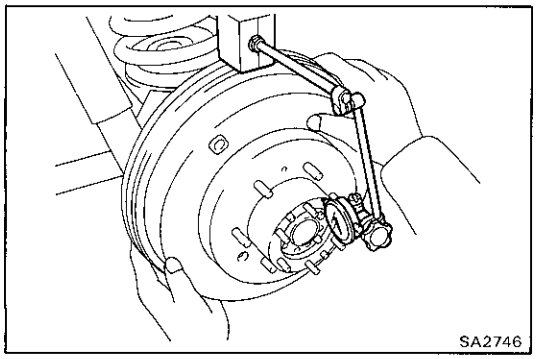

(i) Check the movement of the drum.

(j) Check the hub axial play.

Hub axial play: Less than 0.1 mm (0.004 in.)

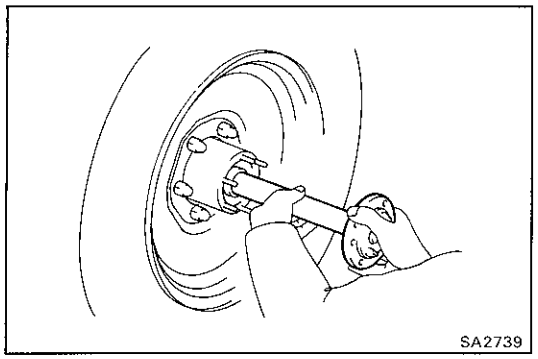

7. INSTALL REAR AXLE SHAFT
(See Pub. No. RM184E, see page SA-83)

8. INSTALL WHEEL AND LOWER VEHICLE