(Hardtop & Canvas Top)

DESCRIPTION

ELECTRICAL WIRING DIAGRAM

SINGLE A/C (Lever Type A/C Control Assembly)

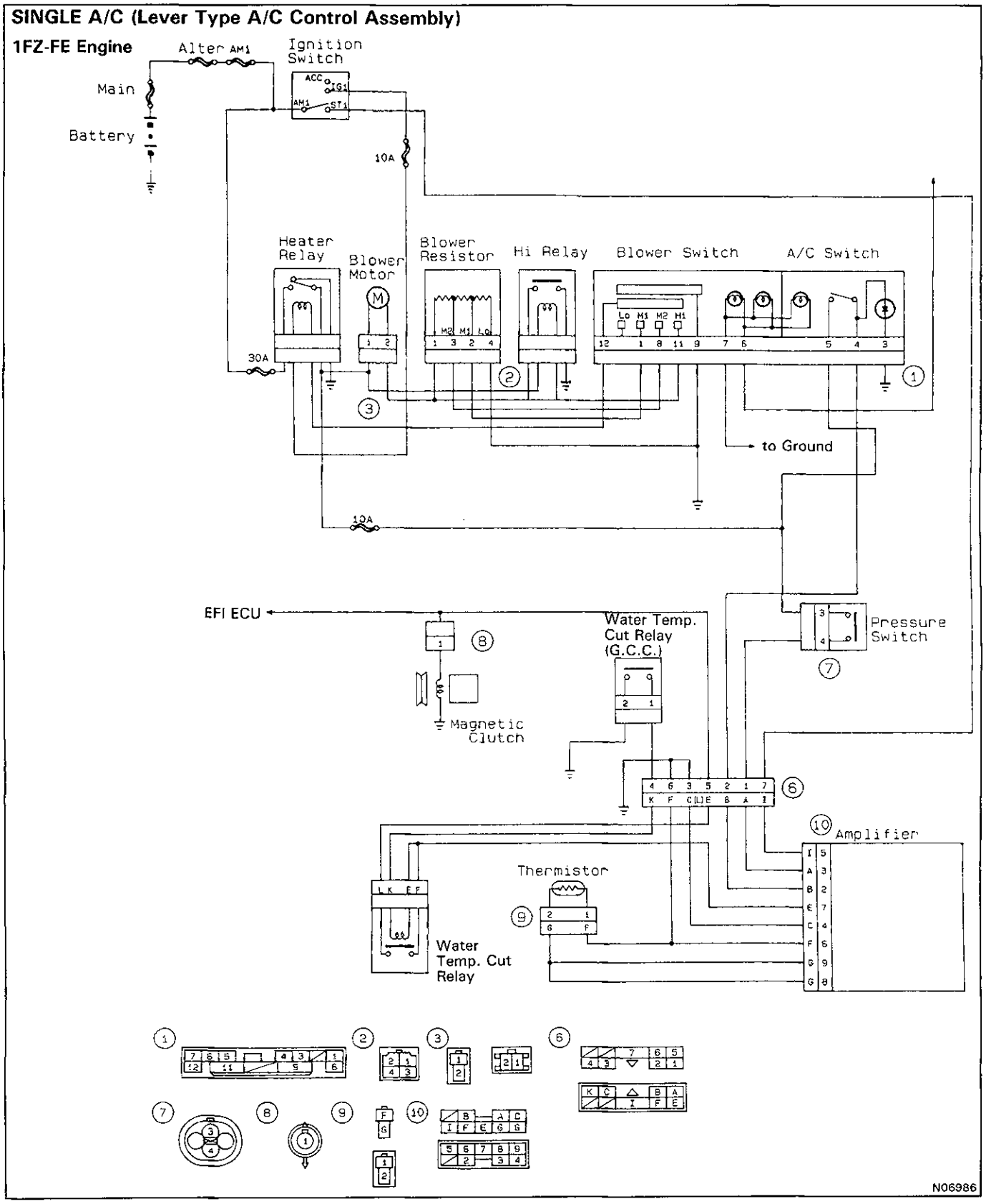

SINGLE A/C (Lever Type A/C Control Assembly)

1FZ Engine

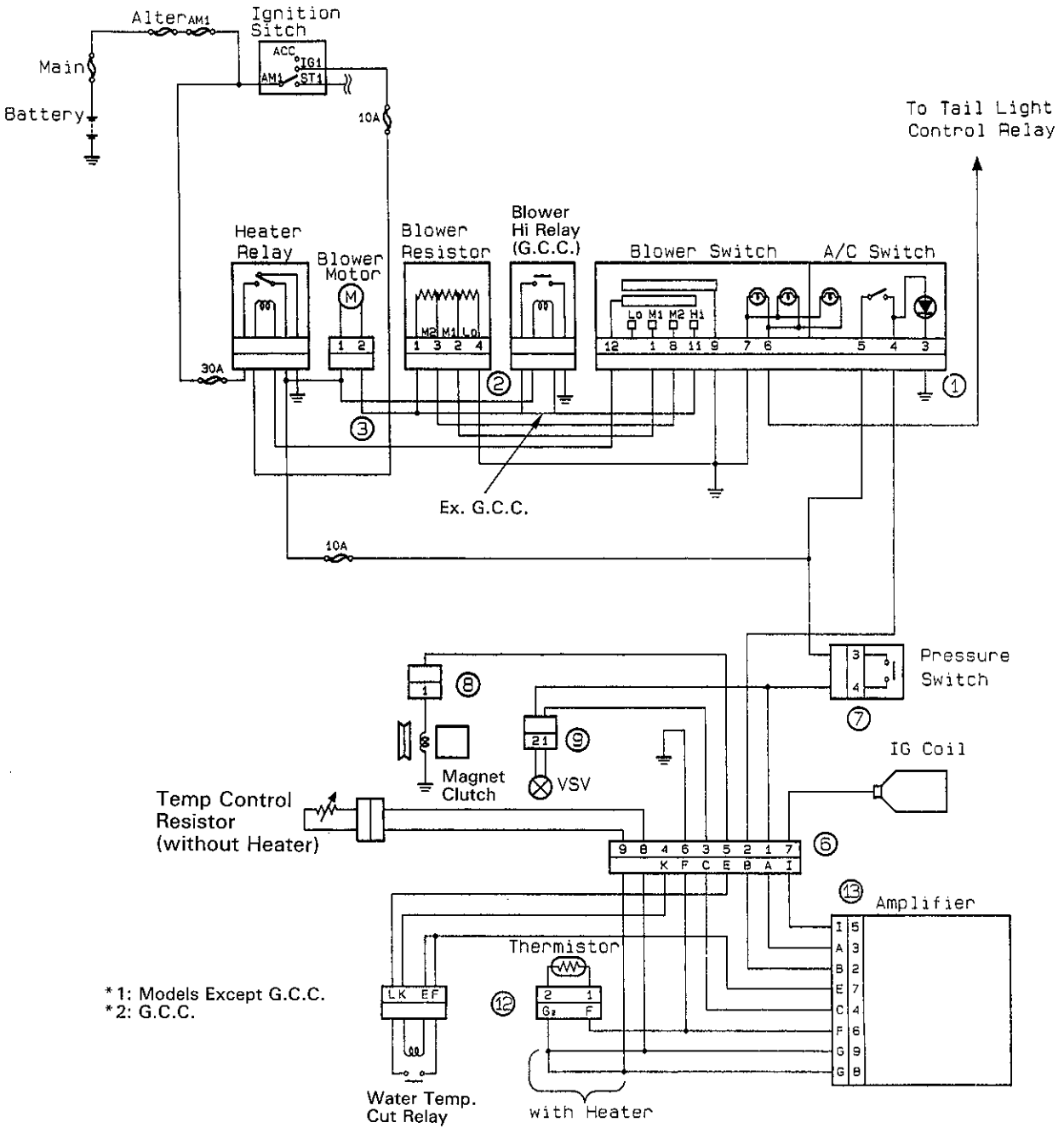

N06987

DUAL A/C (Lever Type A/C Control Assembly)

FZ Series Engine

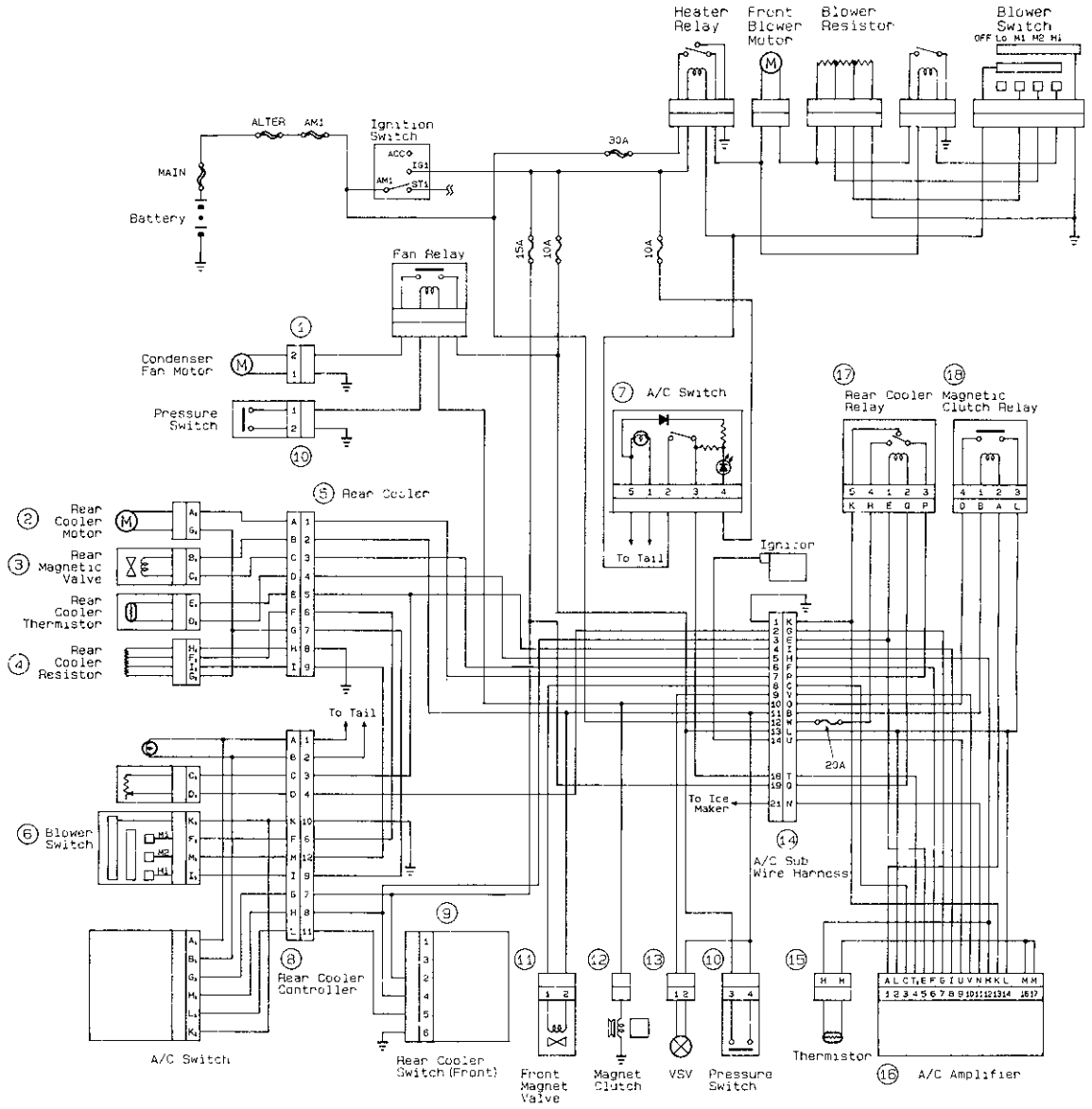

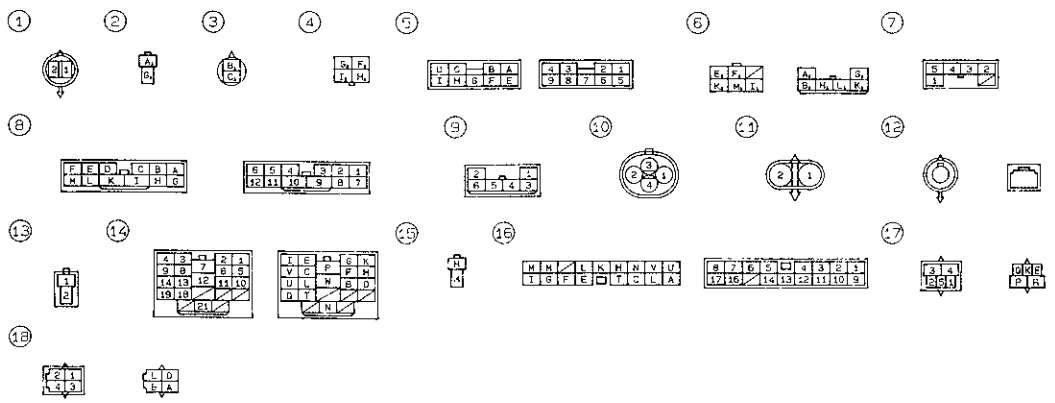

AC2714

— MEMO —

SINGLE A/C (Push Type A/C Control Assembly)

FZ Series Engine

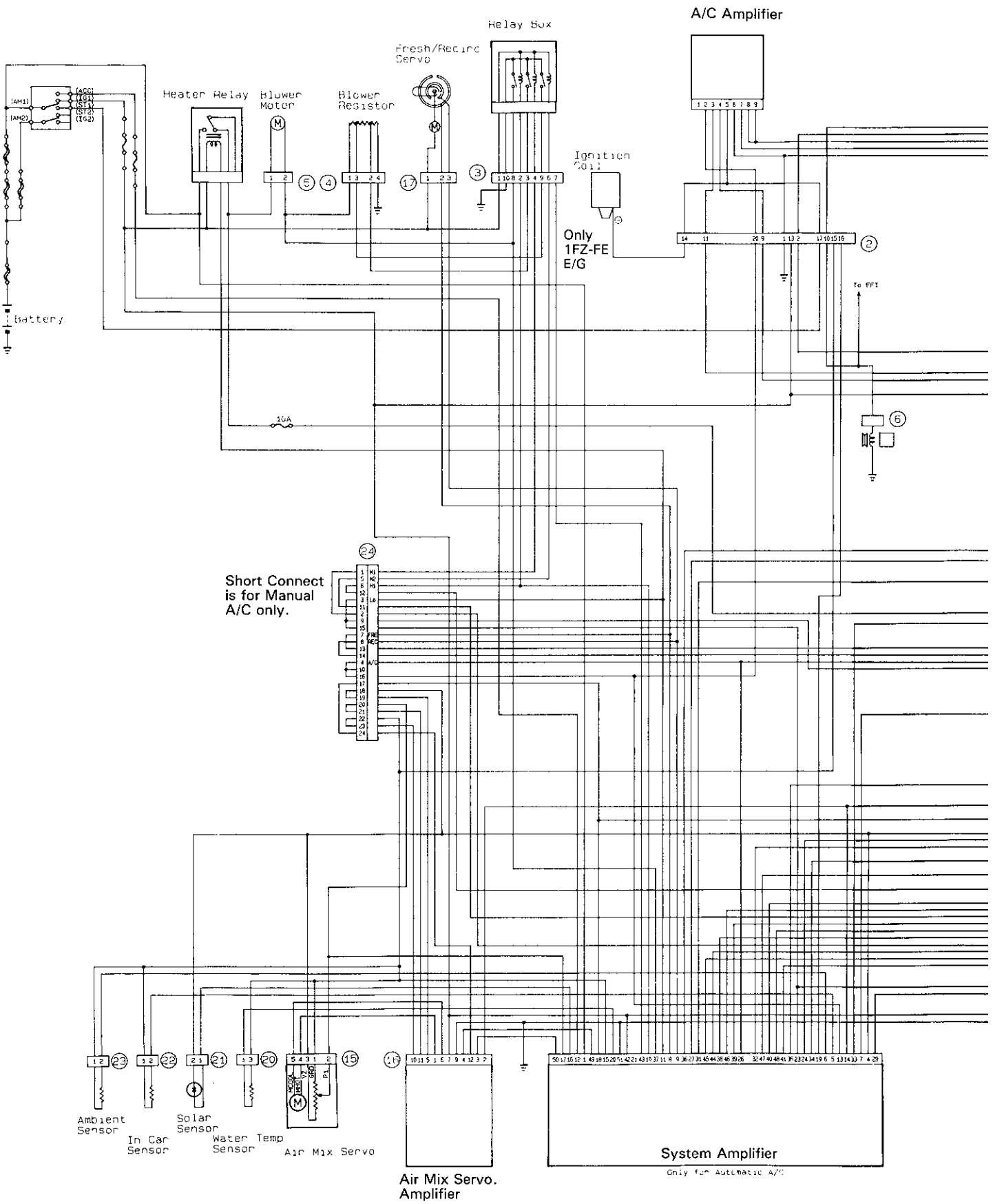

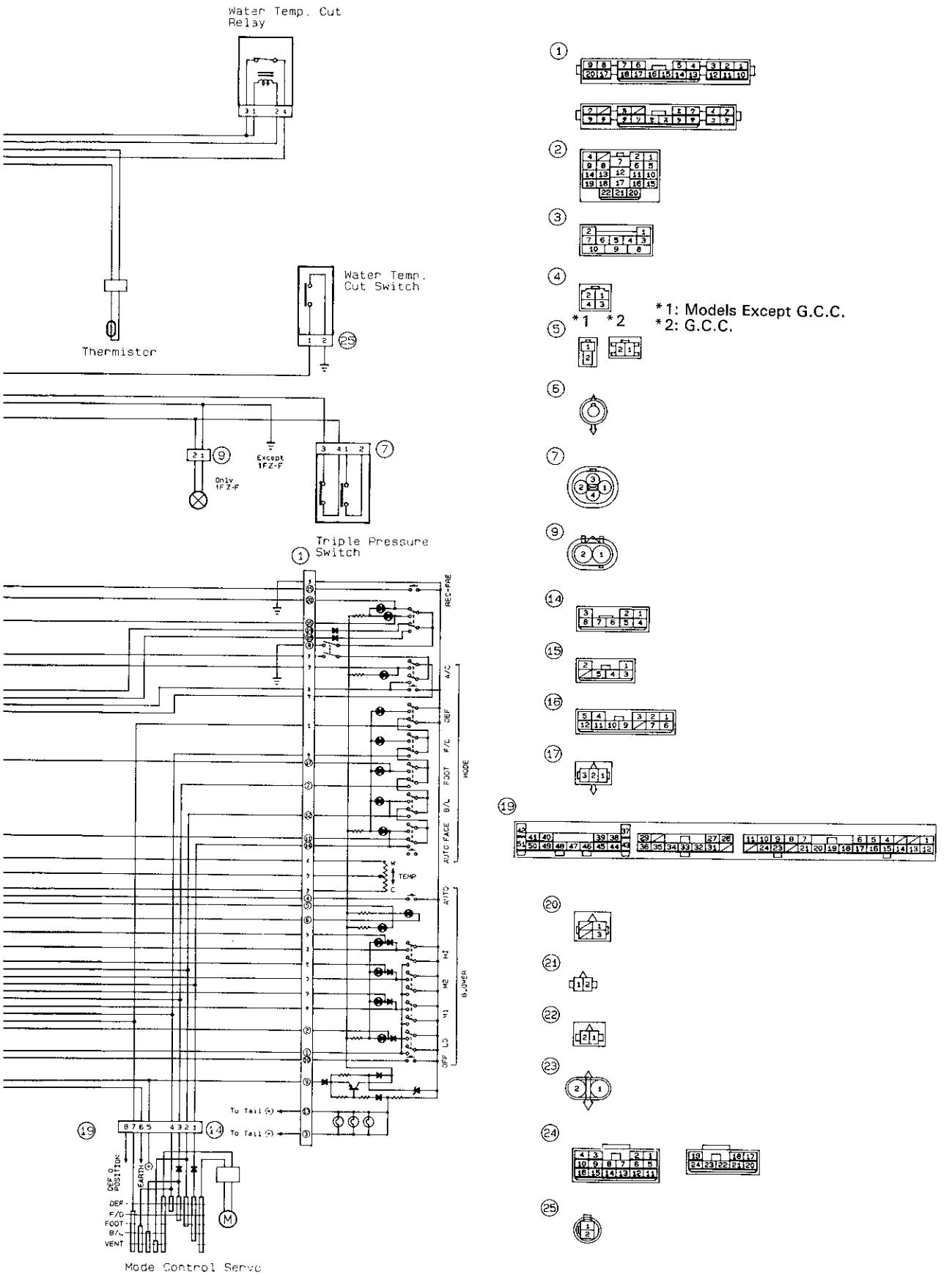
Water Temp. Cut Relay
Water Temp. Cut Switch
Thermistor
Except 1FZ-F
Only 1FZ-F
Triple Pressure Switch
REC-FRE
A/C
DEF
F/C
FOOT
B/L
FACE
MODE
AUTO
TEMP
HI
M2
M1
LO
OFF
BLOWER
To Tail
To Tail
OFF POSITION
EARTH
DEF
F/D
FOOT
B/L
VENT
Mode Control Servo
*1: Models Except G.C.C.
*2: G.C.C.

DUAL A/C (Push Type A/C Control Assembly)

FZ Series Engine

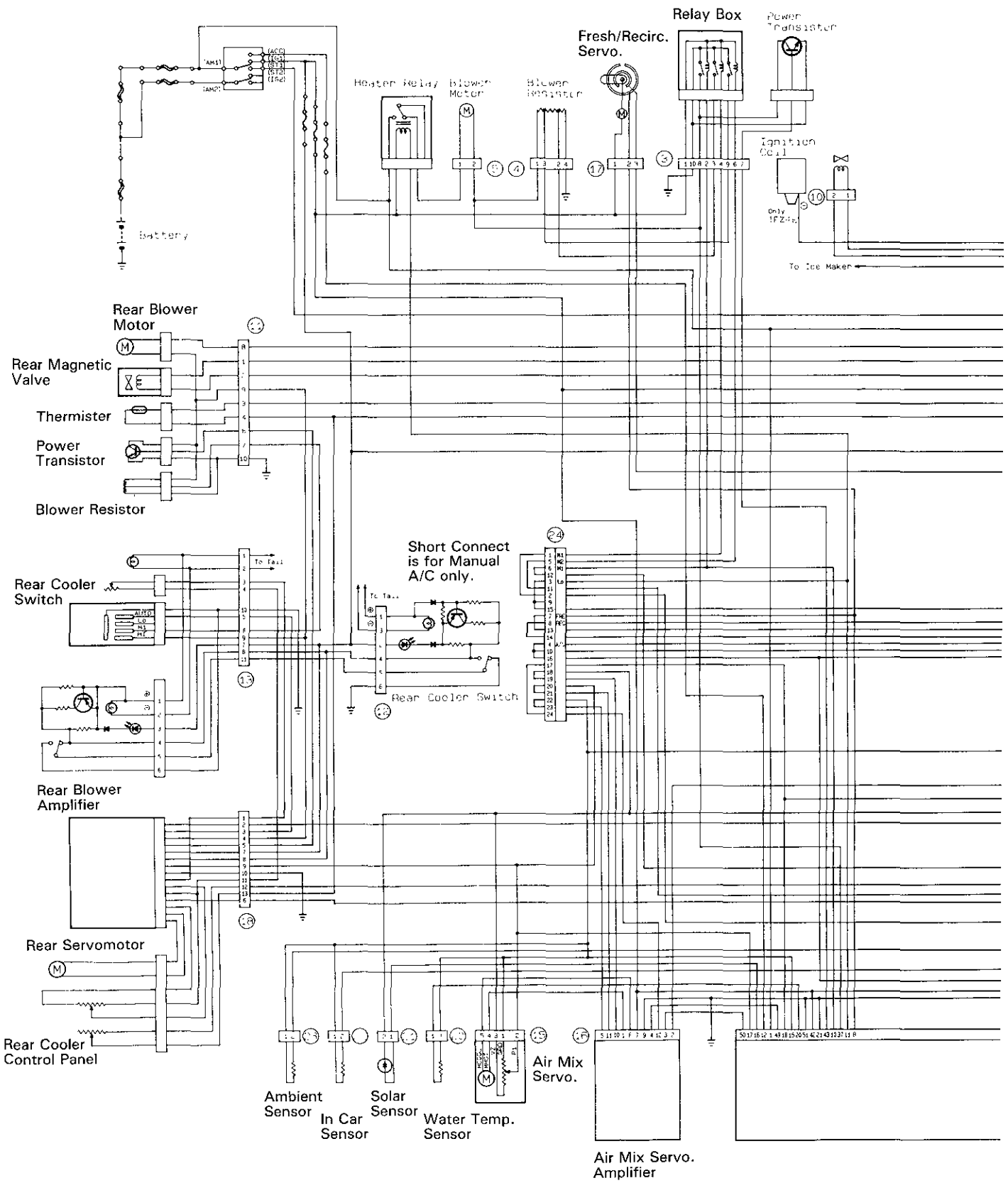

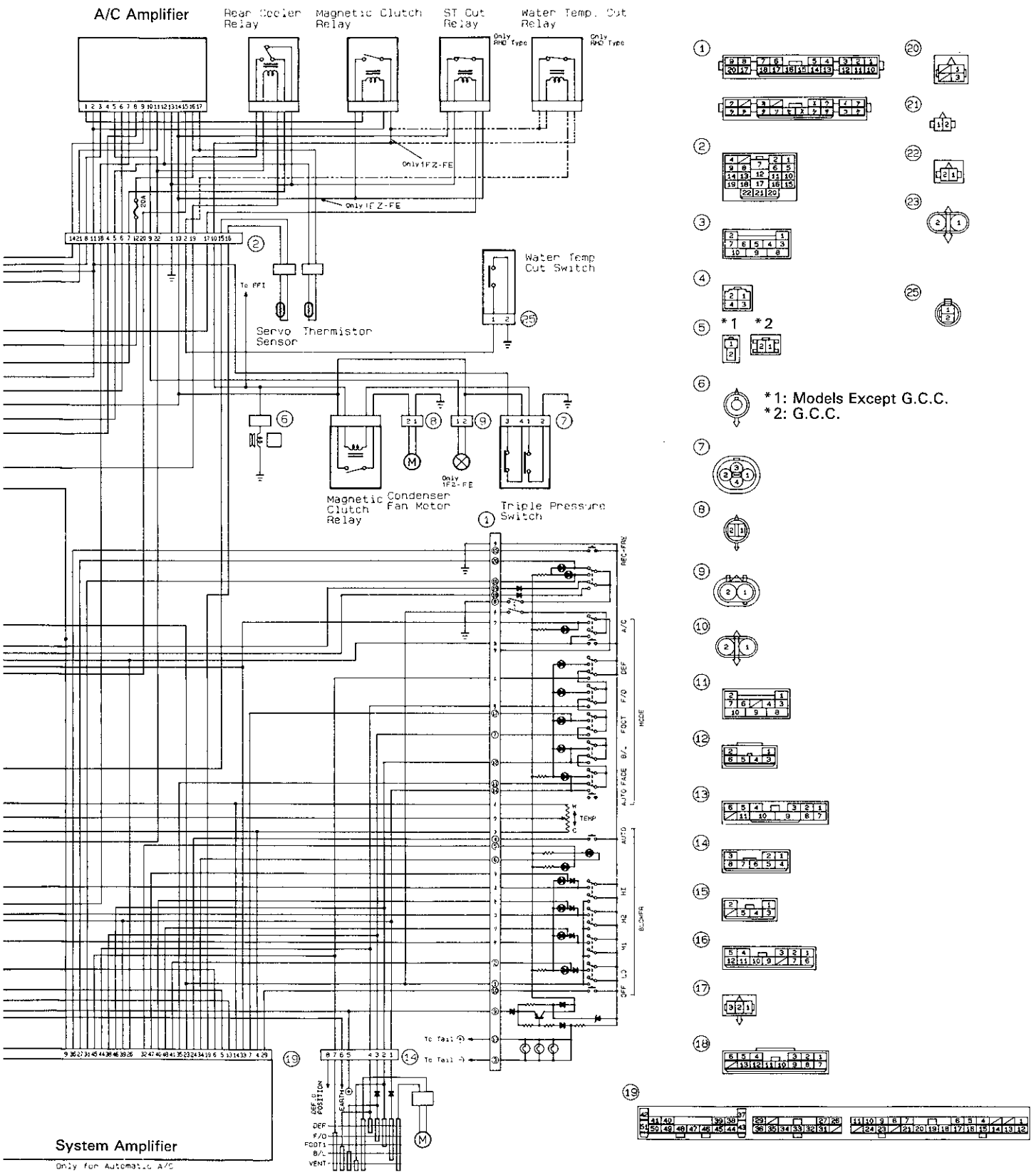

Mode Control Servo.

N06985