REFRIGERATION LINES

TIGHTENING

FZ Series Engine

SINGLE A/C

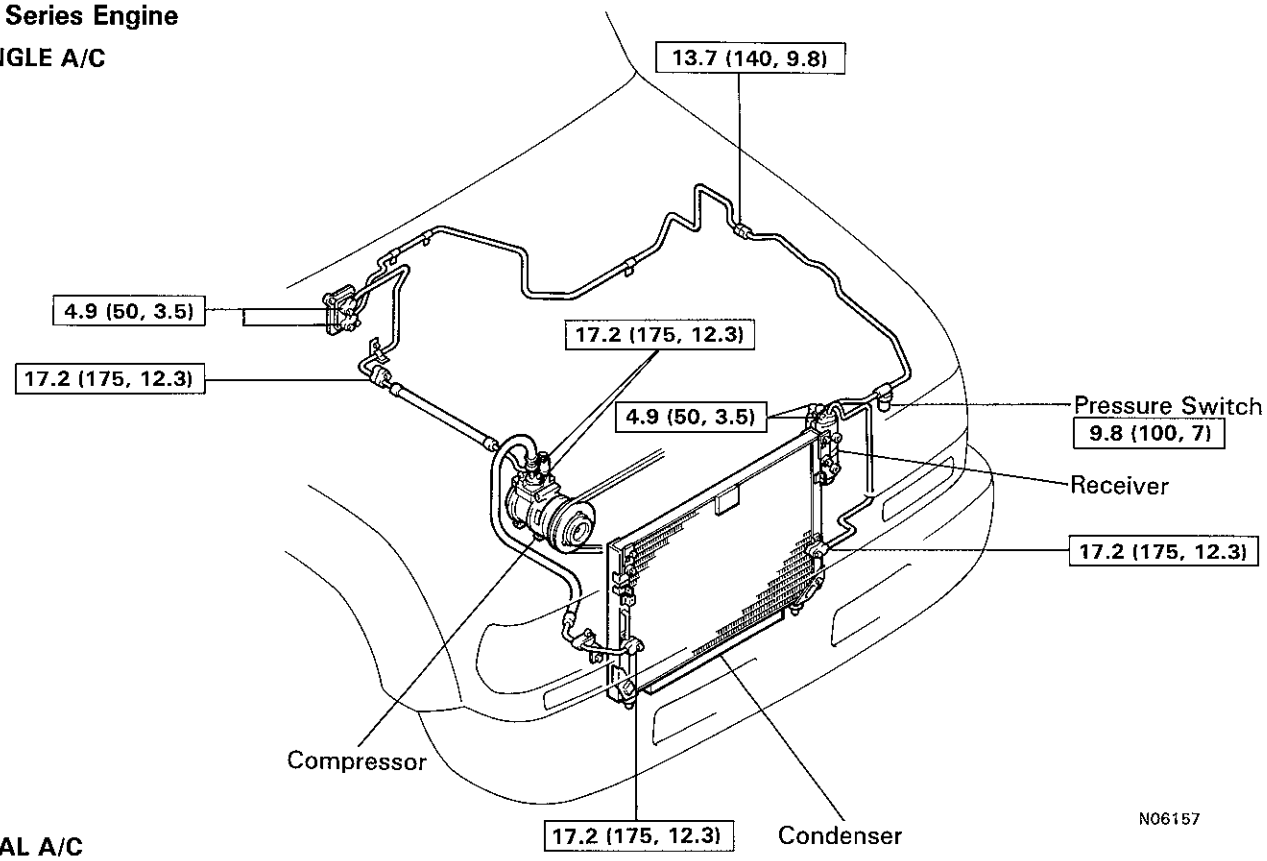

DUAL A/C

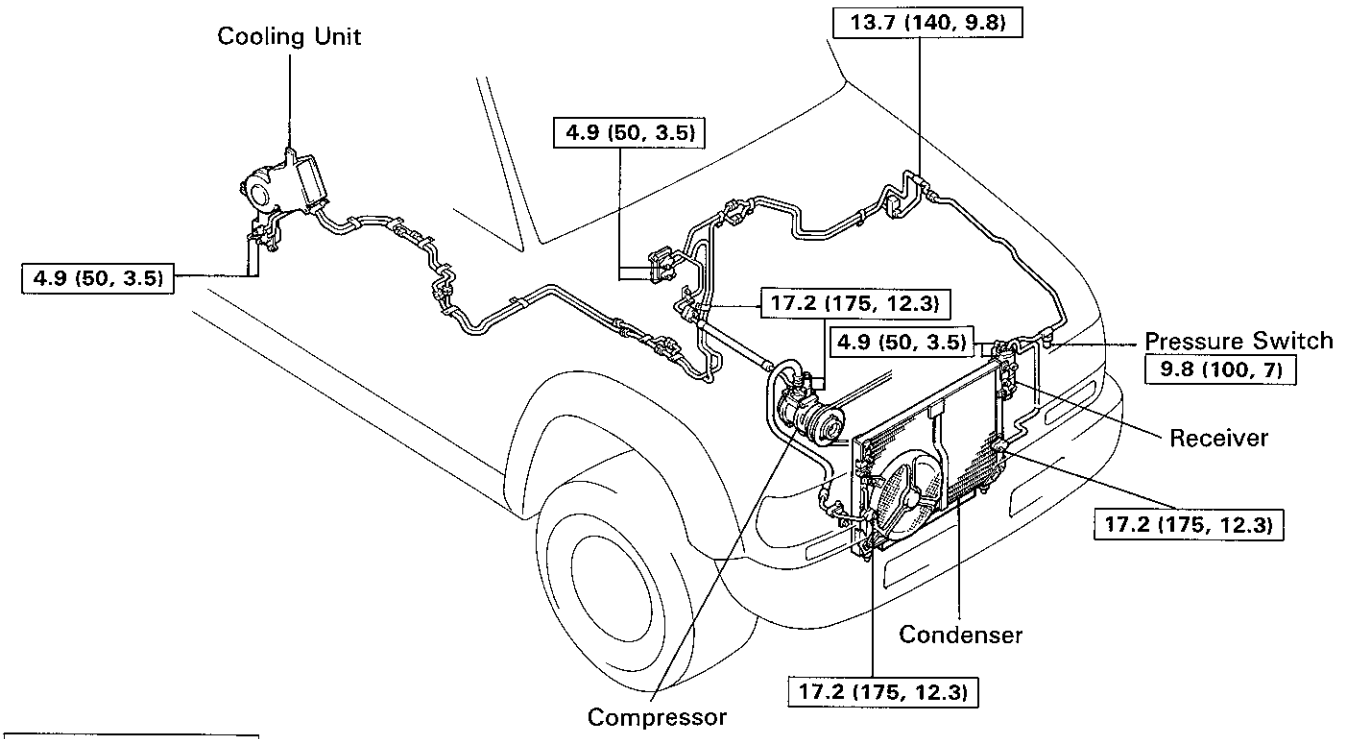

N·m (kgf·cm, ft·lbf) : Specified torque

N06981