COMPRESSOR

COMPRESSOR REMOVAL

FZ Series Engine

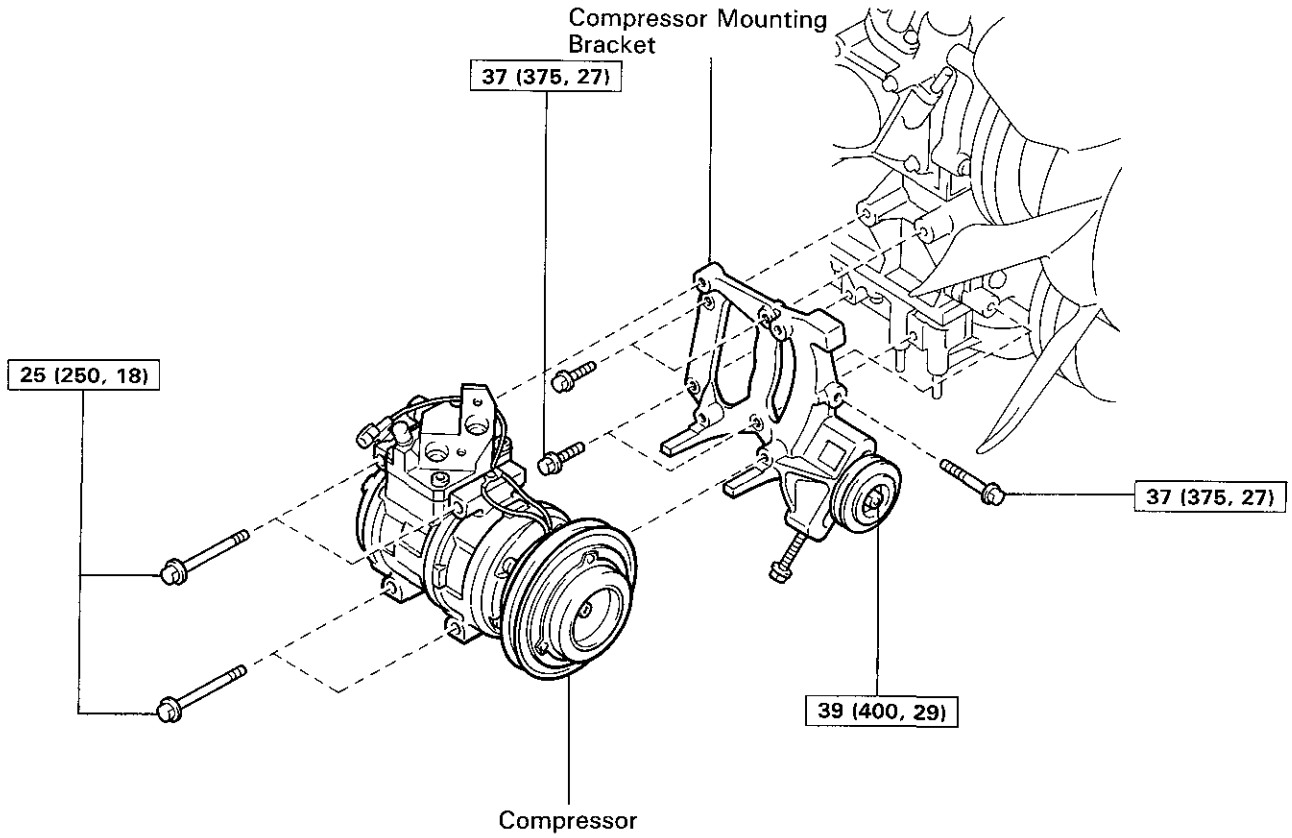

N·m (kgf·cm, ft·lbf) : Specified torque

N06159

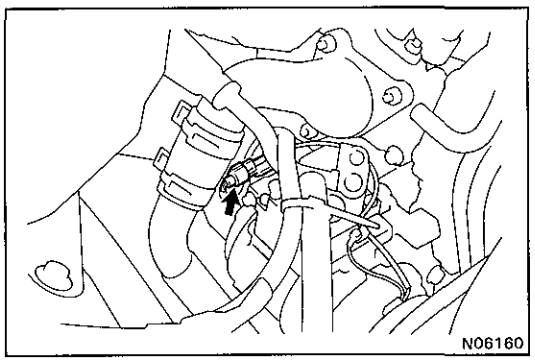

N06160

1. **RUN ENGINE AT IDLE SPEED WITH A/C ON FOR TEN MINUTES**
2. **STOP ENGINE**
3. **DISCONNECT NEGATIVE CABLE FROM BATTERY**
4. **DISCONNECT CONNECTOR FROM MAGNET CLUTCH**
5. **RECOVER REFRIGERANT FROM REFRIGERATION SYSTEM**

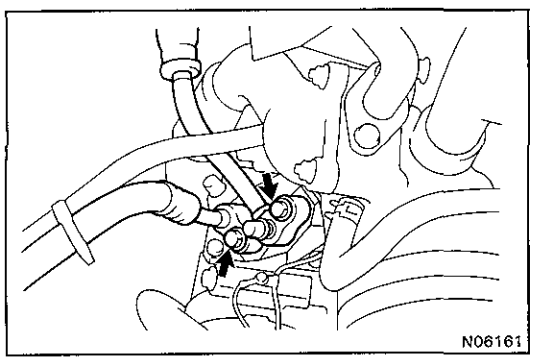

N06161

6. **DISCONNECT TWO HOSES FROM COMPRESSOR SERVICE VALVES**

   Cap the open fittings immediately to keep the moisture and dust out of the system.
7. **REMOVE ENGINE UNDER COVER**

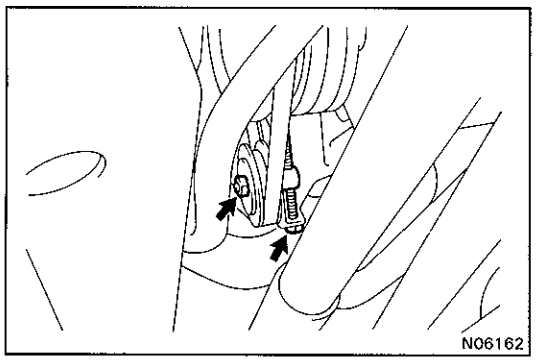

8. LOOSEN IDLE PULLEY LOCK NUT AND COMPRESSOR DRIVE BELT

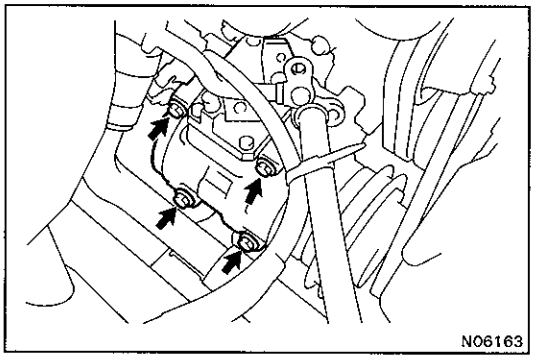

9. REMOVE COMPRESSOR

Remove the four bolts and pull the compressor upward.

MAGNET CLUTCH DISASSEMBLY

FZ Series Engine

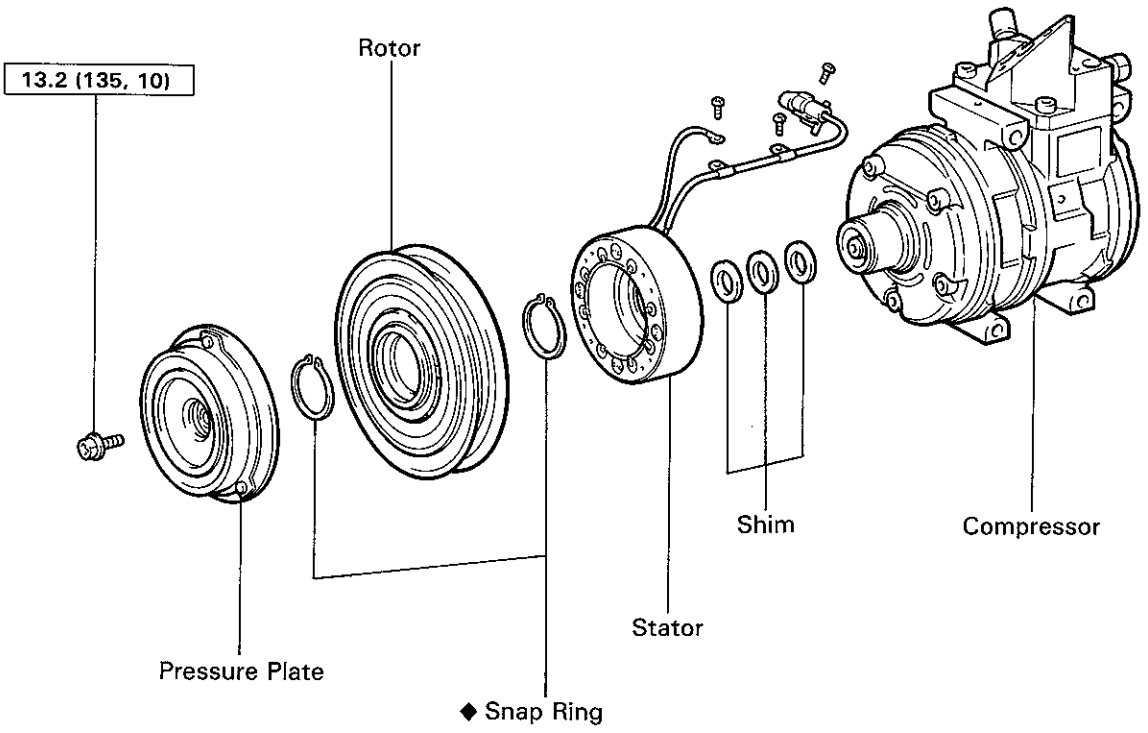

N·m (kgf·cm, ft·lbf) : Specified torque

◆ Non-reusable part

N06164