(Station Wagon)

DESCRIPTION

ELECTRICAL WIRING DIAGRAM

FZ Series Engine

Dual A/C

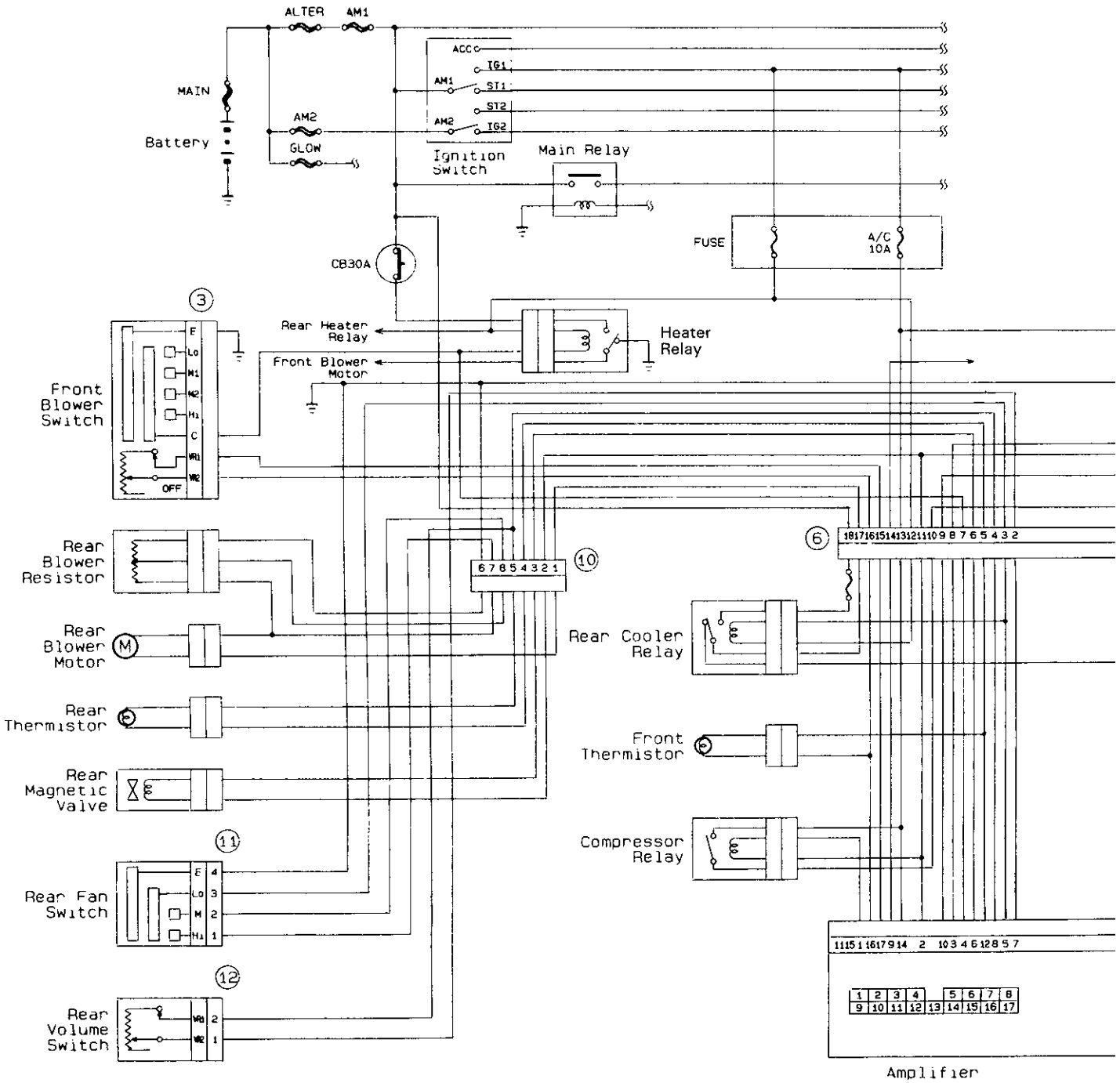

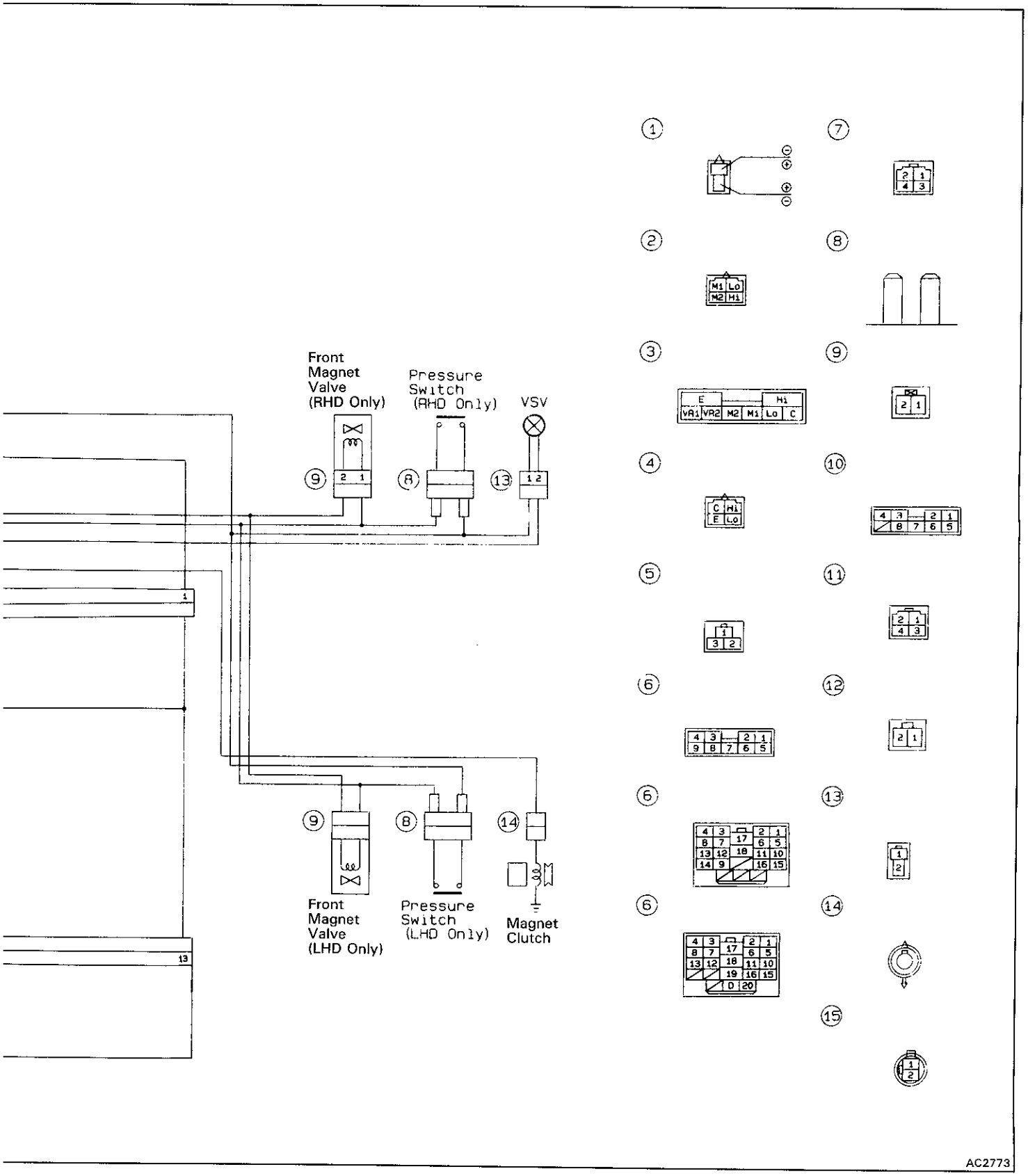
Front
Magnet
Valve
(RHD Only)
Pressure
Switch
(RHD Only)
VSV
Front
Magnet
Valve
(LHD Only)
Pressure
Switch
(LHD Only)
Magnet
Clutch
AC2773

FZ Series Engine
Single A/C

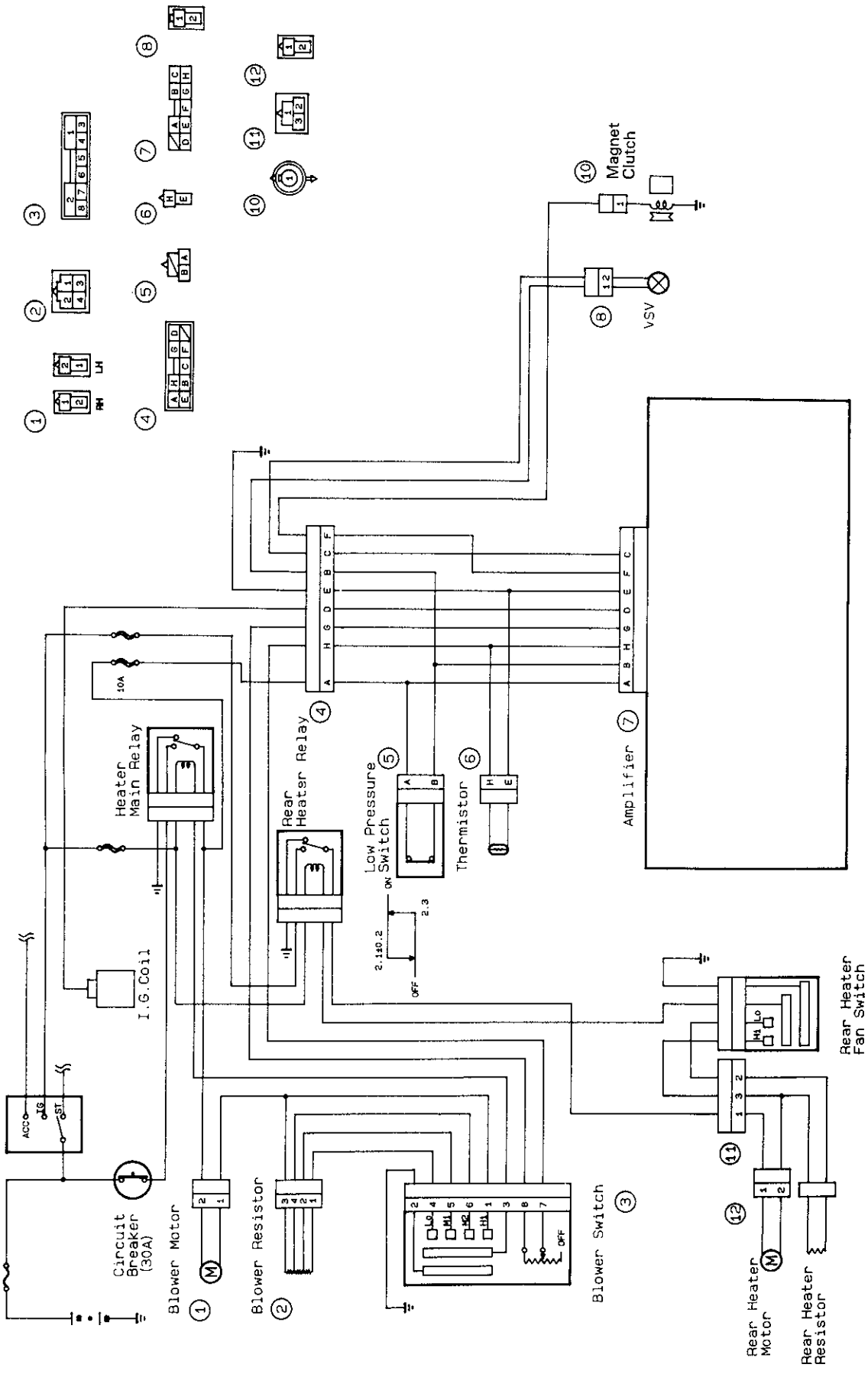

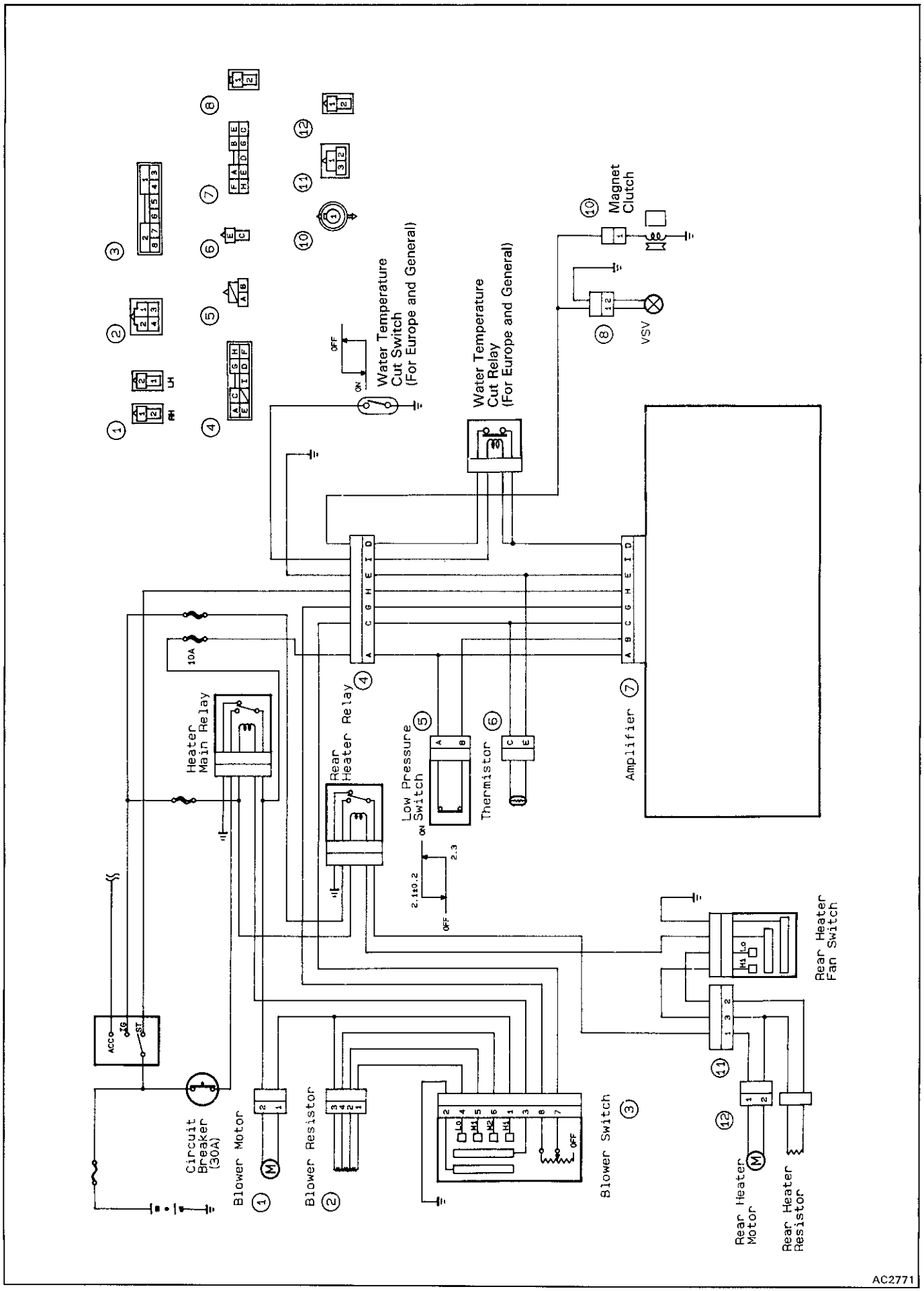
Water Temperature Cut Switch (For Europe and General)
Water Temperature Cut Relay (For Europe and General)
Magnet Clutch
VSV
Heater Main Relay
Rear Heater Relay
Low Pressure Switch
Thermistor
Amplifier
Circuit Breaker (30A)
Blower Motor
Blower Resistor
Blower Switch
Rear Heater Fan Switch
Rear Heater Motor
Rear Heater Resistor
10A
ACC
IG
ST
OFF
ON
AC2771