TROUBLESHOOTING

Trouble occurring in the ECT can stem from one of three sources: the engine, the ECT electronic control unit or the transmission itself. Before troubleshooting, determine in which these three sources the problem lies, and begin troubleshooting with the simplest operation, gradually working up in order or difficulty.

BASIC TROUBLESHOOTING

Before troubleshooting an ECT, first determine whether the problem is electrical or mechanical. To do this, just refer to the basic troubleshooting flow-chart provided below.

If the cause is already known, using the basic troubleshooting chart below a long with the general troubleshooting chart on the following pages should speed the procedure.

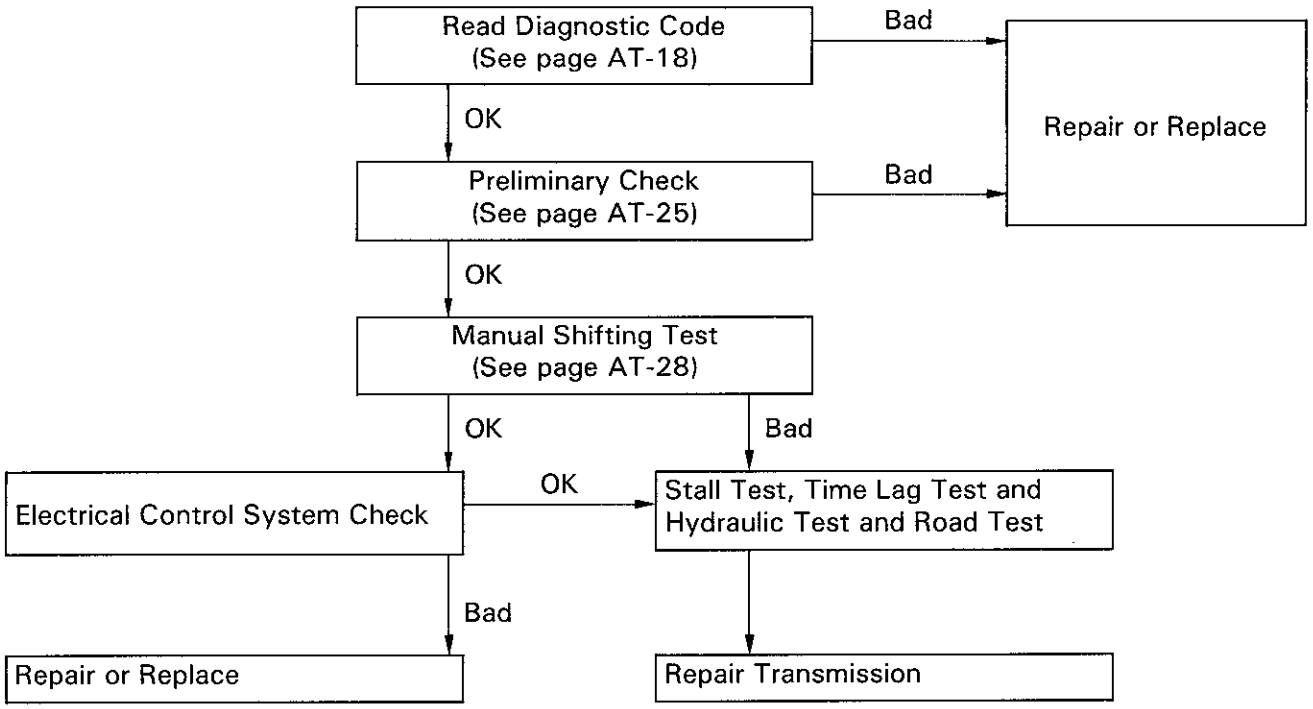

NOTICE: Refer to A442F Automatic Transmission Repair Manual (Pub. No. RM314E) when ★ mark appears in the column for page numbers.

Problem	Possible cause	Remedy	Page
Fluid discolored or smells burnt	Fluid contaminated	Replace fluid	AT-25
	Torque converter faulty	Replace torque converter	AT-76
	Transmission faulty	Disassemble and inspect transmission	★
Vehicle does not move in any forward range or reverse	Manual linkage out of adjustment	Adjust linkage	AT-26
	Valve body or primary regulator faulty	Inspect valve body	★
	Parking lock pawl faulty	Inspect parking lock pawl	★
	Torque converter faulty	Replace torque converter	AT-76
	Converter drive plate broken	Replace drive plate	AT-76
	Oil pump intake screen blocked	Clean screen	★
	Transmission faulty	Disassemble and inspect transmssion	★
Shift lever position incorrect	Manual linkage out of adjustment	Adjust linkage	AT-26
	Manual valve and lever faulty	Inspect valve body	★
	Transmission faulty	Disassemble and inspect transmission	★
Harsh engagement into any drive position	Throttle cable out of adjustment	Adjust throttle cable	AT-26
	Valve body or primary regulator faulty	Inspect valve body	★
	Accumulator pistons faulty	Inspect accumulator pistons	★
	Transmission faulty	Disassemble and inspect transmission	★
Delayed 1 — 2, 2 — 3 or 3 — O/D up-shift, or down-shift from O/D — 3 or 3 — 2 and shifts back to O/D or 3	Electronic control faulty	Inspect electronic control	AT-29
	Valve body faulty	Inspect valve body	★
	Solenoid valve faulty	Inspect solenoid valve	AT-40
Slips on 1 — 2, 2 — 3 or 3 — O/D up-shift, or shps or shudders on acceleration	Manual linkage out of adjustment	Adjust linkage	AT-26
	Throttle cable out of adjustment	Adjust throttle cable	AT-26
	Valve body faulty	Inspect valve body	★
	Solenoid valve faulty	Inspect solenoid valve	AT-40
	Transmission faulty	Disassemble and inspect transmission	★
Drag, binding or tie-up on 1 — 2, 2 — 3 or 3 — O/D up-shift	Manual linkage out of adjustment	Adjust linkage	AT-26
	Valve body faulty	Inspect valve body	★
	Transmission faulty	Disassemble and inspect transmission	★

NOTICE: Refer to A442F Automatic Transmission Repair Manual (Pub. No. RM314E) when ★ mark appears in the column for page numbers.

Problem	Possible cause	Remedy	Page
No lock-up in 3rd or O/D	Electronic control faulty	Inspect electronic control	AT-29
	Valve body faulty	Inspect valve body	★
	Solenoid valve faulty	Inspect solenoid valve	AT-40
	Transmission faulty	Disassemble and inspect transmission	★
Harsh down-shift	Throttle cable out of adjustment	Adjust throttle cable	AT-26
	Throttle cable and cam faulty	Inspect throttle cable and cam	AT-26
	Accumulator pistons faulty	Inspect accumulator pistons	★
	Valve body faulty	Inspect valve body	★
	Transmission faulty	Disassemble and inspect transmission	★
No down-shift when coasting	Valve body faulty	Inspect valve body	★
	Solenoid valve faulty	Inspect solenoid valve	AT-40
	Electronic control faulty	Inspect electronic control	AT-29
Down-shift occurs too quickly or too late while coasting	Throttle cable faulty	Inspect throttle cable	AT-26
	Valve body faulty	Inspect valve body	★
	Transmission faulty	Disassemble and inspect transmission	★
	Solenoid valve faulty	Inspect solenoid valve	AT-40
	Electronic control faulty	Inspect electronic control	AT-29
No O/D — 3, 3 — 2 or 2 — 1 kick-down	Solenoid valve faulty	Inspect solenoid valve	AT-40
	Electronic control faulty	Inspect eletronic control	AT-29
	Valve body faulty	Inspect valve body	★
No engine braking 2 or L range	Solenoid valve faulty	Inspect solenoid valve	AT-40
	Electronic control faulty	Inspect electronic control	AT-29
	Valve body faulty	Inspect valve body	★
	Transmission faulty	Disassemble and inspect transmission	★
Vehicle does not hold in P	Manual linkage out of adjustment	Adjust linkage	AT-26
	Parking lock pawl cam and spring faulty	Inspect cam and spring	AT-26

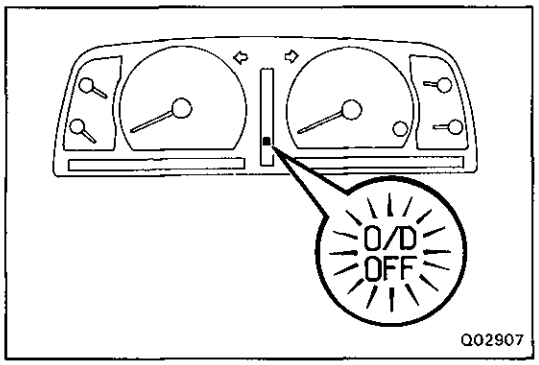

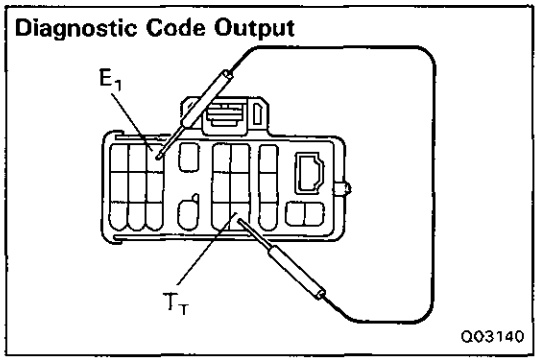

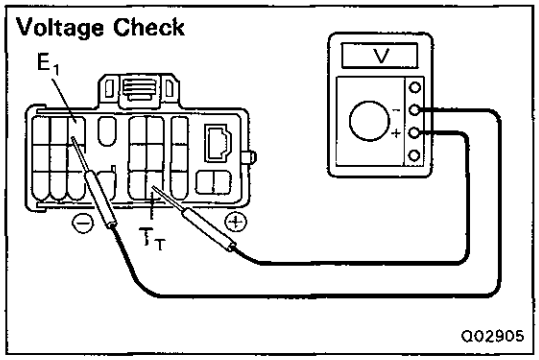

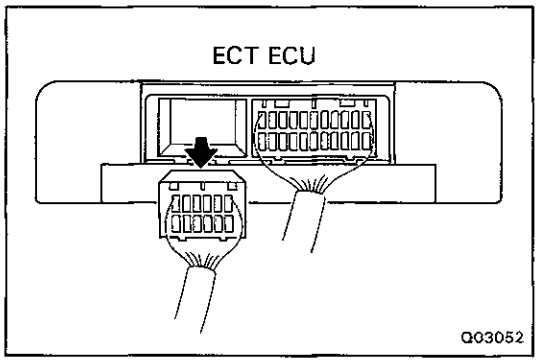

DIAGNOSIS SYSTEM

DESCRIPTION

1. A self-diagnosis function is built into the electrical control system. Warning is indicated by the overdrive OFF indicator light.

   HINT: Warning and diagnostic codes can be read only when the overdrive switch is ON. If OFF, the overdrive OFF light is lit continuously and will not blink.

(a) If a malfunction occurs within the speed sensors (No.1 or 2), throttle sensor or engine speed signal, the overdrive OFF indicator light will blink to warn the driver.

However, there will be no warning of a malfunction with lock-up solenoid.

(b) The diagnostic code can be read by the number of blinks of the overdrive OFF indicator light when terminals T_T and E_1 are connected. (See page AT-20)

(c) The throttle position sensor or brake signal are not indicated, but inspection can be made by checking the voltage at terminal T_T of the check connector.

(d) The signals to each gear can be checked by measuring the voltage at terminal T_T of the check connector while driving.

2. The diagnostic code is retained in memory by the ECT ECU and due to back-up voltage, is not canceled out when the engine is turned off. Consequently, after repair, it is necessary to turn the ignition switch off and remove the DOME fuse (10 A) or disconnect the ECT ECU connector to cancel out the diagnostic code. (See page AT-20)

   HINT:
   - Low battery voltage will cause faulty operation of the diagnosis system. Therefore, always check the battery first.
   - Use a voltmeter and ohmmeter that have an impedance of at least 10 kΩ/V.

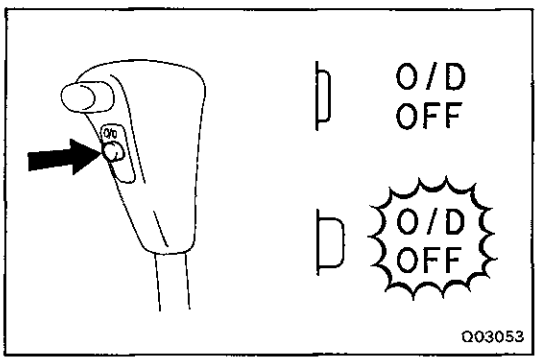

CHECK "O/D OFF" INDICATOR LIGHT

1. Turn the ignition switch ON.
2. The "O/D OFF" light will come on when the O/D switch is placed at OFF.
3. When the O/D switch is set to ON, the "O/D OFF" light should go out.

   If the "O/D OFF" light flashes when the O/D switch is set to ON, the electronic control system is faulty.

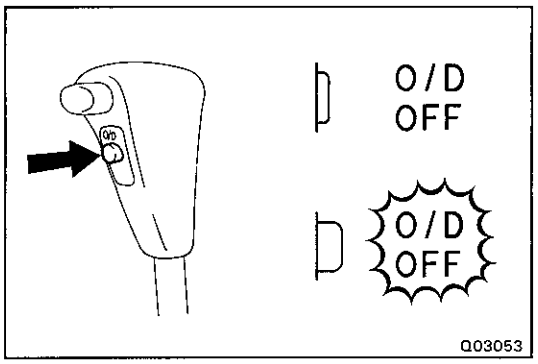

READ DIAGNOSTIC CODE

1. TURN IGNITION SWITCH AND O/D SWITCH TO ON

Do not start the engine.

HINT: Warning and diagnostic codes can be read only when the overdrive switch is ON. If OFF, the overdrive OFF light willl light continuously and will not blink.

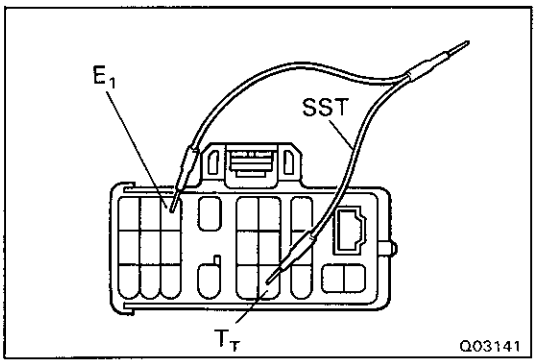

2. CONNECT T_T AND E_1 TERMINALS OF CHECK CONNECTOR

Using SST, connect terminals T_T and E_1 of the check connector.

SST 09843-18020

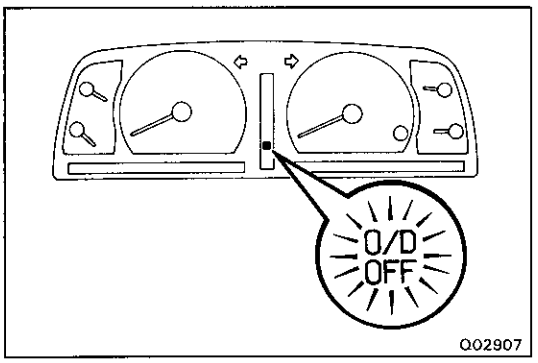

3. READ DIAGNOSTIC CODE

Read the diagnostic code as indicated by the number of times the O/D OFF light flashes.

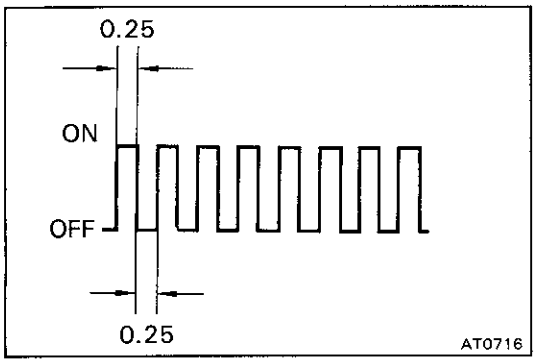

(Diagnostic Code Indication)

- If the system is operating normally, the light will flash 2 times par second.
- In the event of a malfunction, the light will flash 1 time par second. The number of blinks will equal the first number and, after 1.5 seconds pause, the second number of the two digit diagnostic code. If there are two or more codes, there will be a 2.5 seconds pause between each.

HINT: In the event of several trouble codes occurring simultaneously, indication will began from the smaller value and continue to the larger.

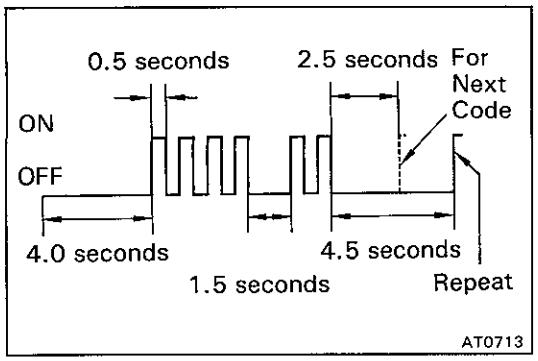

4. REMOVE SST

DIAGNOSTIC CODES

Code No.	Light Pattern	Diagnosis System
—		Normal
41		Severed throttle position sensor or short circuit— severed wire harness or short circuit
42		Defective No. 1 speed sensor (in combination meter)— severed wire harness or short circuit
61		Defective No. 2 speed sensor (in ATM)— severed wire harness or short circuit
62	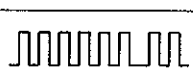	Severed No. 1 solenoid or short circuit— severed wire harness or short circuit
63		Severed No. 2 solenoid or short circuit— severed wire harness or short circuit
64	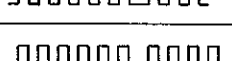	Severed lock-up solenoid or short circuit— severed wire harness or short circuit
65	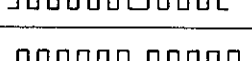	Severed timing solenoid or short circuit— severed wire harness or short circuit
86	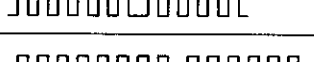	Severed engine speed sensor or short circuit— severed wire harness or short circuit
*88		Severed engine ECU and ECT ECU or short circuit— severed wire harness or short circuit

*: 1FZ-FE engine only

Q03076

HINT: If codes 62, 63, 64, or 65 appear, there is an electrical malfunction in the solenoid. Causes due to mechanical failure, such as a stuck valve, will not appear.

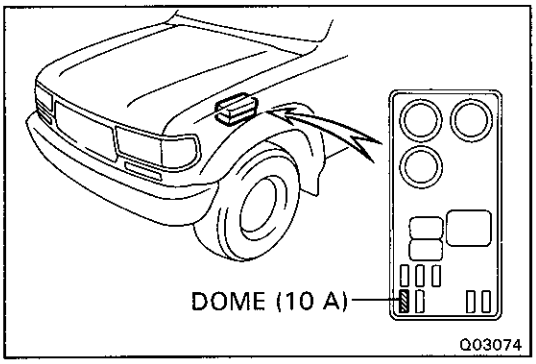

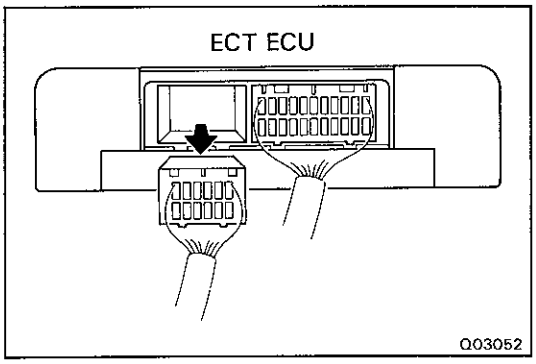

CANCEL OUT DIAGNOSTIC CODE

1. After repair of the trouble area, the diagnostic code retained in memory by the ECT ECU must be canceled by removing the DOME fuse (10 A) for 10 seconds or more, depending on ambient temperature (the lower the temperature, the longer the fuse must be left out) with the ignition switch OFF.

   HINT:
   - Cancellation can be also done by removing the battery negative (−) terminal, but in this case other memory systems will be also canceled out.
   - The diagnostic code can be also canceled out by disconnecting the ECT ECU connector.
   - If the diagnostic trouble is not canceled out, it will be retained by the ECT ECU and appear along with a new code in event of future trouble.

2. After cancellation, perform a road test to confirm that a "normal code" is now read on the O/D OFF light.

TROUBLESHOOTING FLOW-CHART

HINT:

- If diagnostic code Nos.41, 42, 61, 62, 63, 64, 65, 86, 88 (1FZ-FE engine only) and are output, the overdrive OFF indicator light will begin to blink immediately to warn the driver. However, an impact or shock may cause the blinking to stop; but the code will still be retained in the ECT ECU memory until canceled out.
- There is no warning for diagnostic code No.64 and 65.
- In the event of a simultaneous malfunction of both No.1 and No.2 speed sensors, no diagnostic code will appear and the fail-safe system will not function. However, when driving in the D range, the transmission will not up-shift from first gear, regardless of the vehicle speed.

Diagnostic Code 41 (Throttle position sensor circuitry) (1FZ-FE engine)

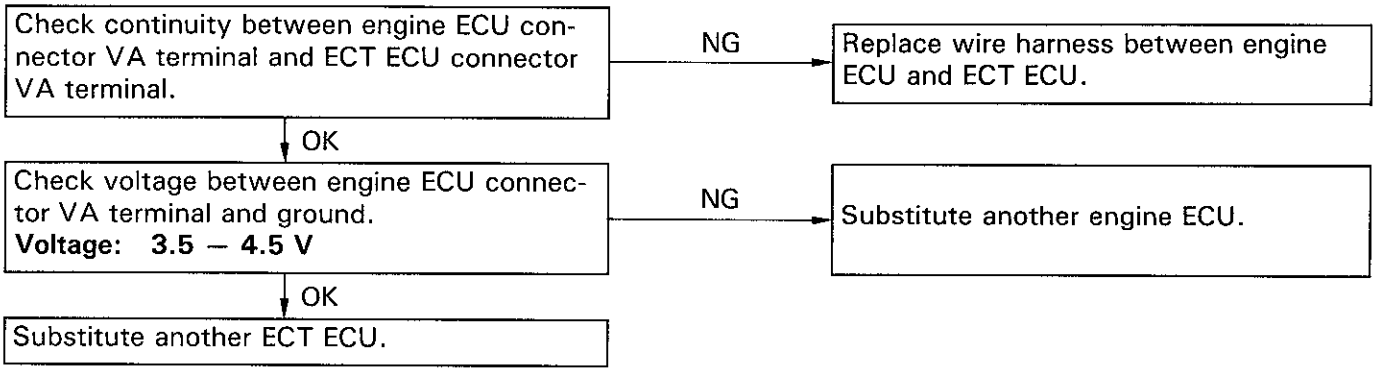

Diagnostic trouble Code 41 (Throttle position sensor circuitry) (1HD-T engine)

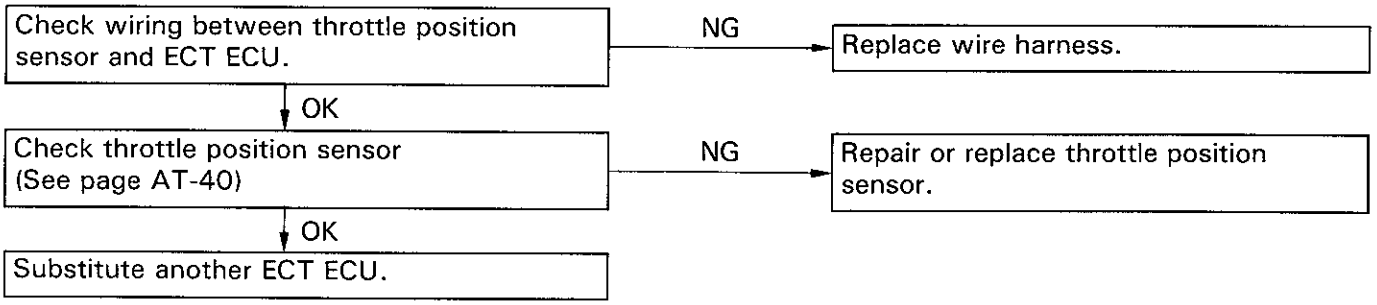

Diagnostic Code 42 (No. 1 speed sensor circuitry)

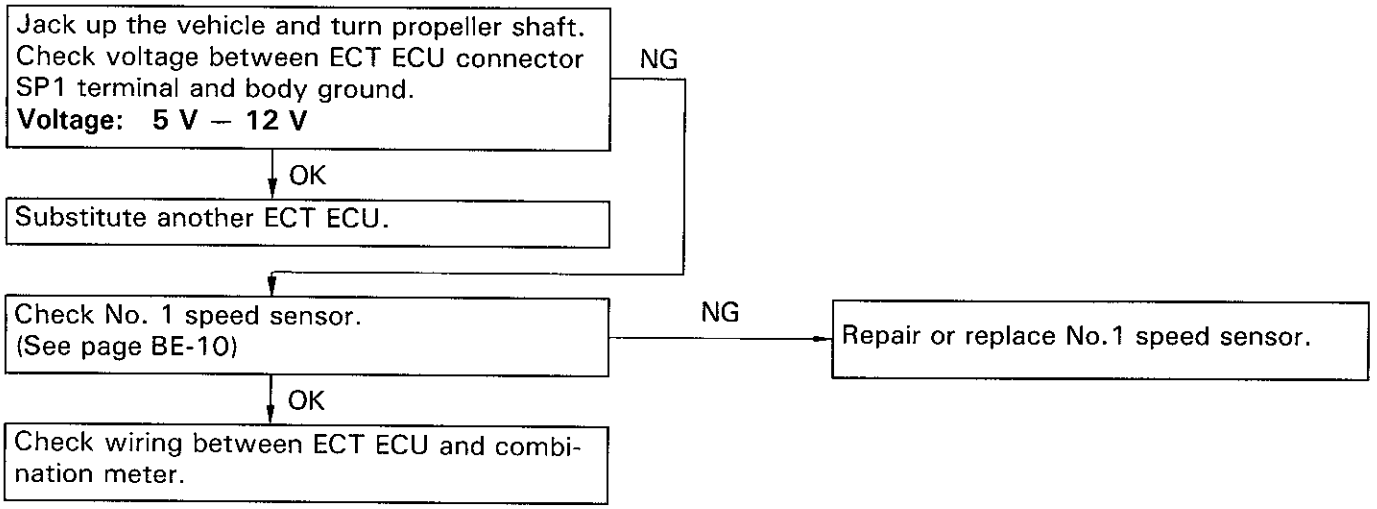

Diagnostic Code 61 (No.2 speed sensor circuitry)

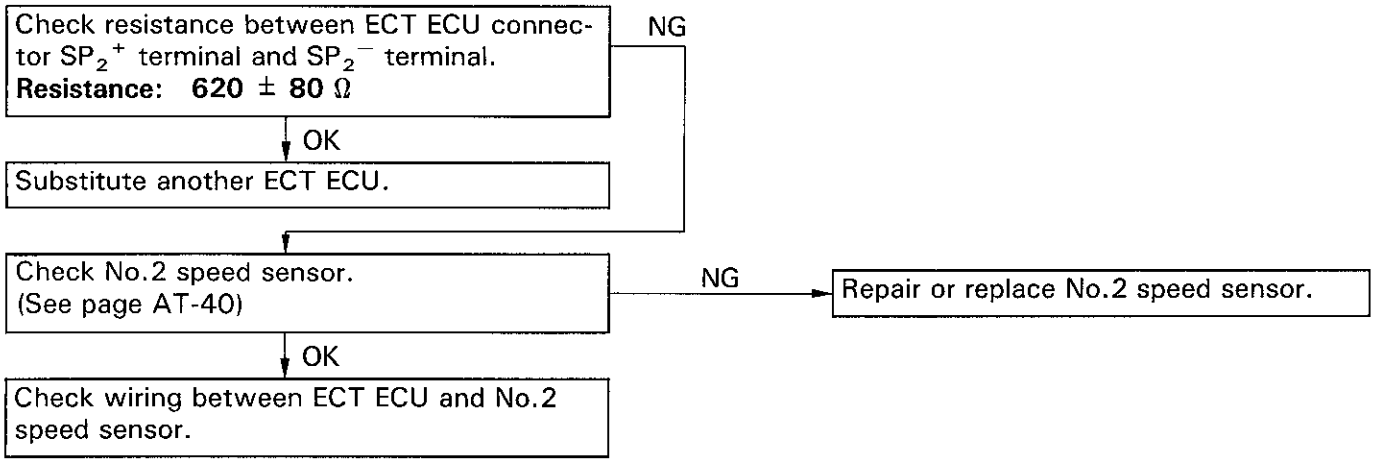

Diagnostic Code 62 (No.1 solenoid valve circuitry)

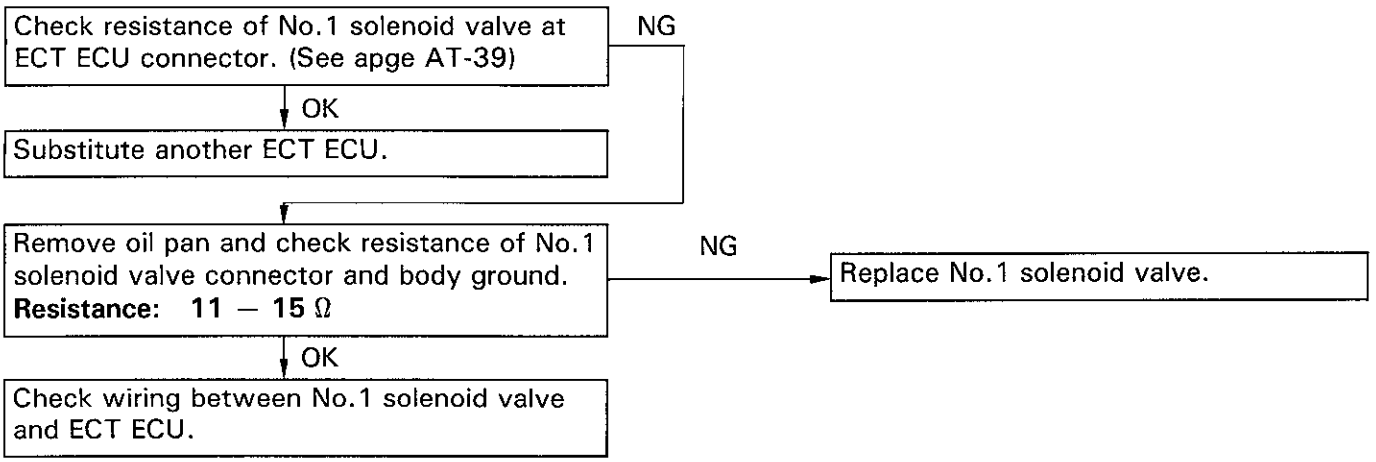

Diagnostic Code 63 (No. 2 solenoid valve circuitry)

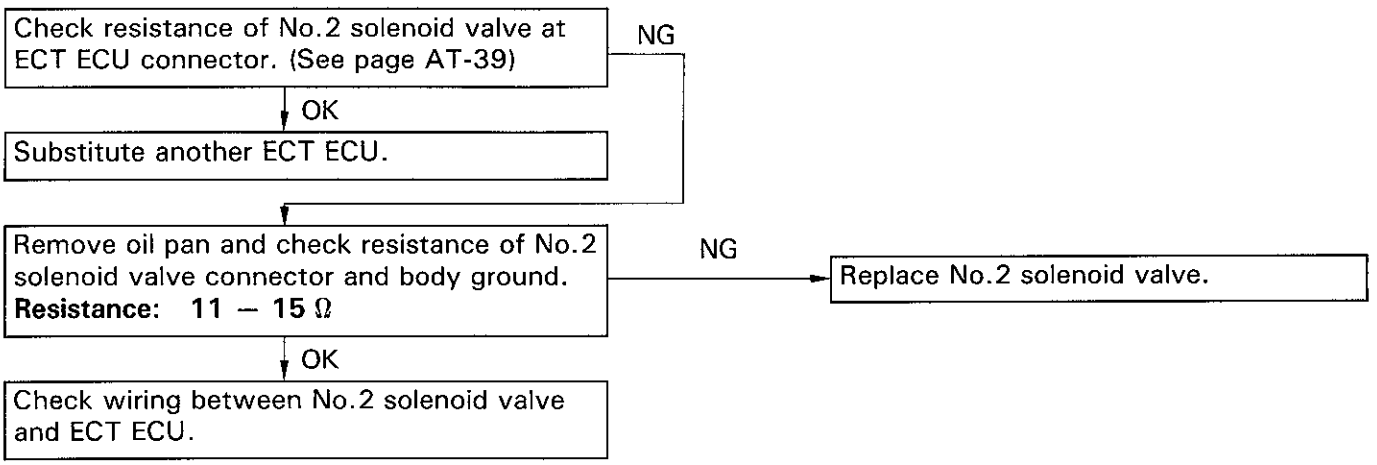

Diagnostic Code 64 (Lock-up solenoid valve circuitry)

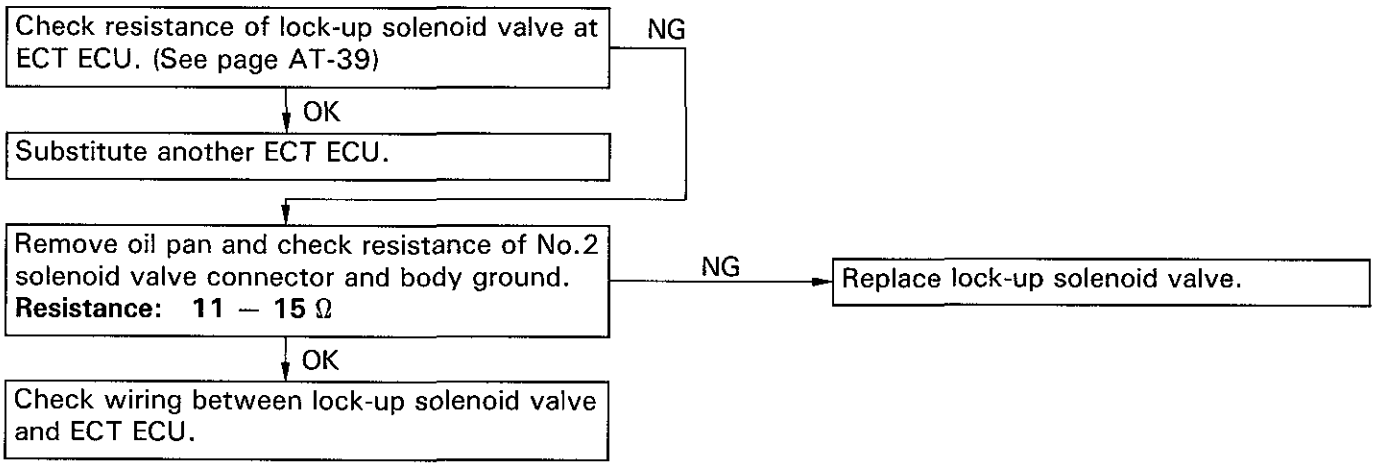

Diagnostic Code 65 (Timing solenoid valve circuitry)

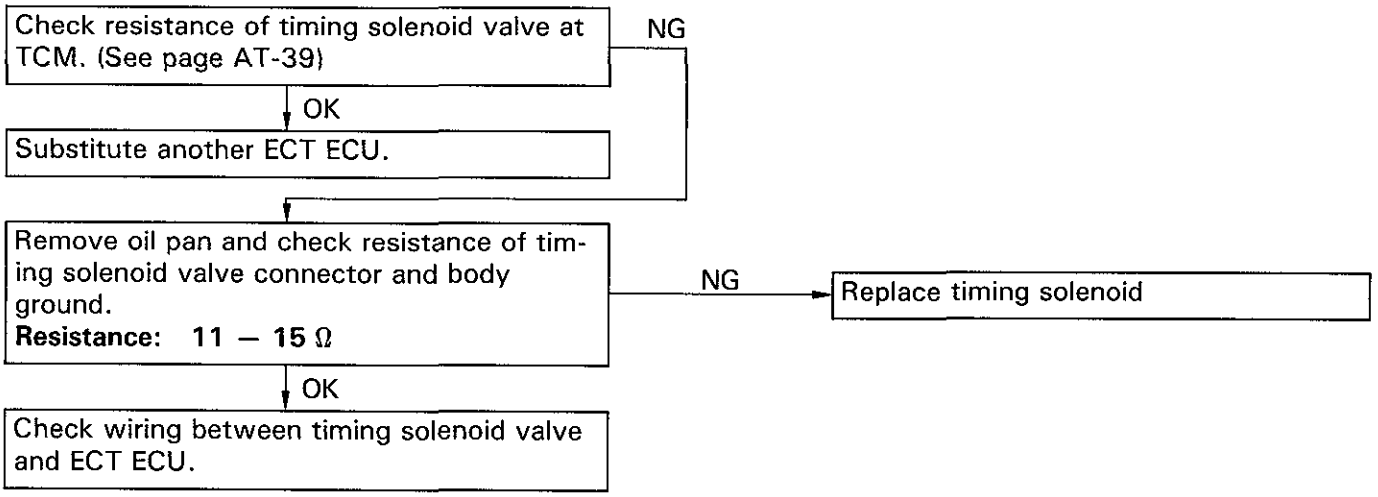

Diagnostic Code 86 (Engine speed sensor circuitry) (1FZ-FE engine)

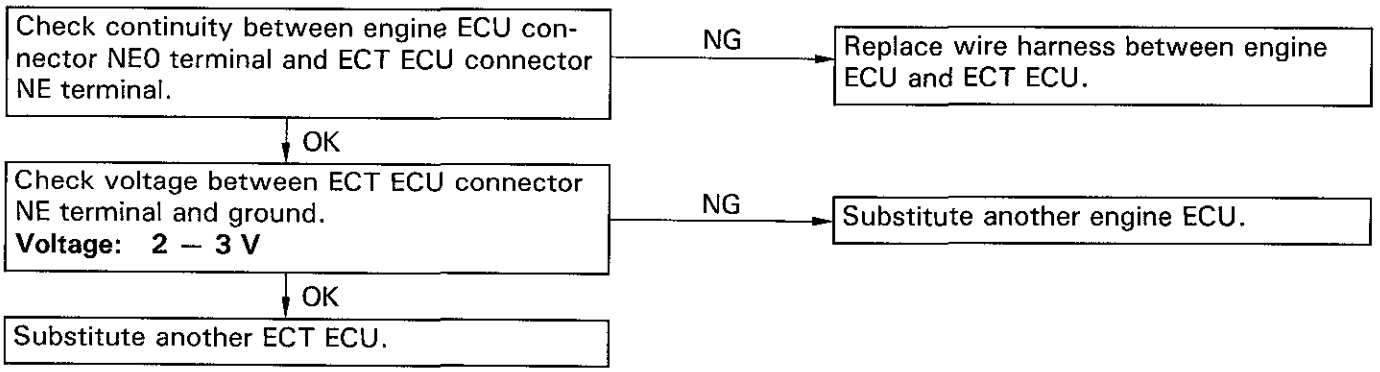

Diagnostic Code 86 (Engine speed sensor circuitry) (1HD-T engine)

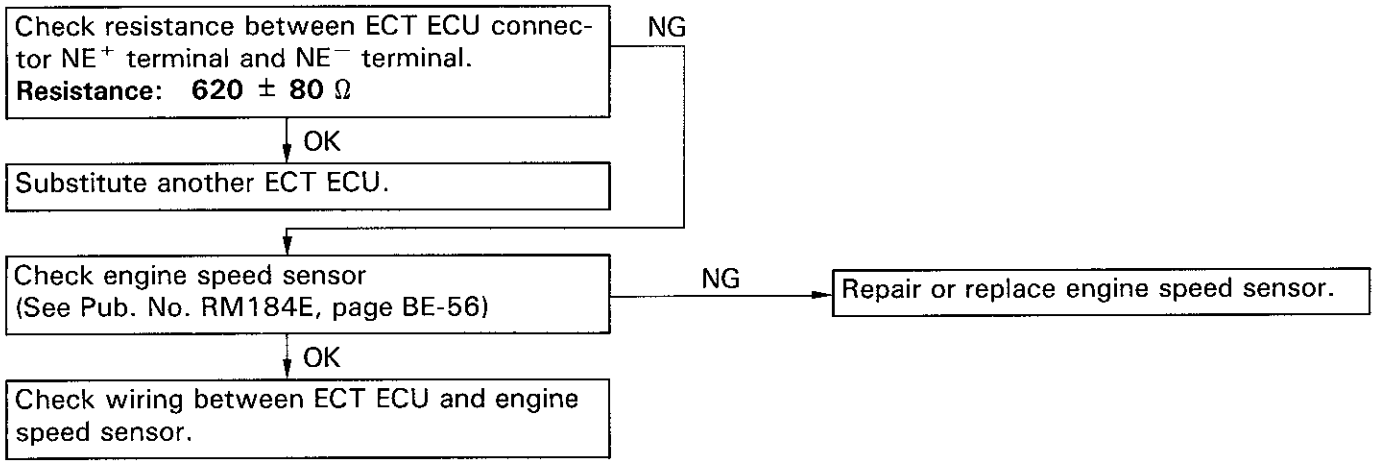

(1FZ-FE engine only)
Diagnostic Code 88 (Timing retard demand signal and fail safe signal circuitry)

(Timing retard demand signal)

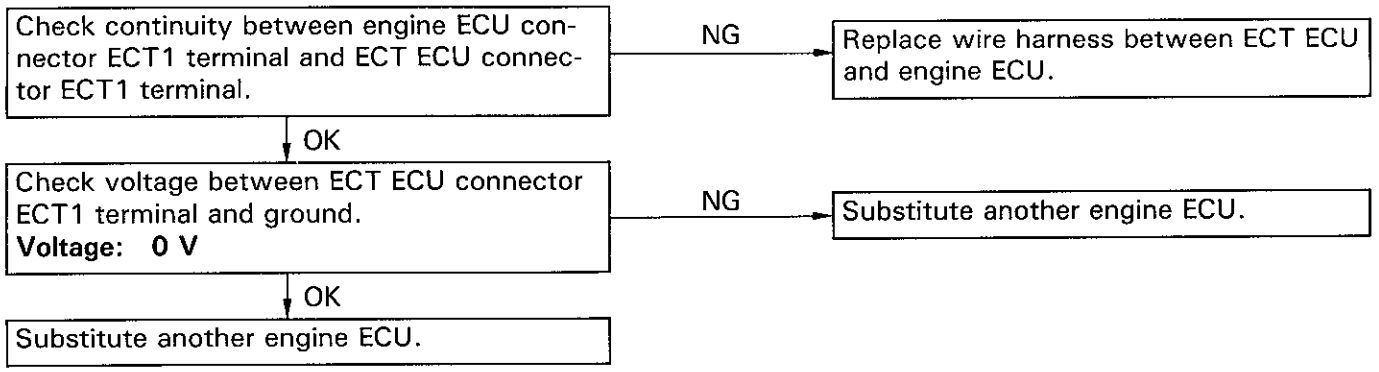

(Fail safe singal)

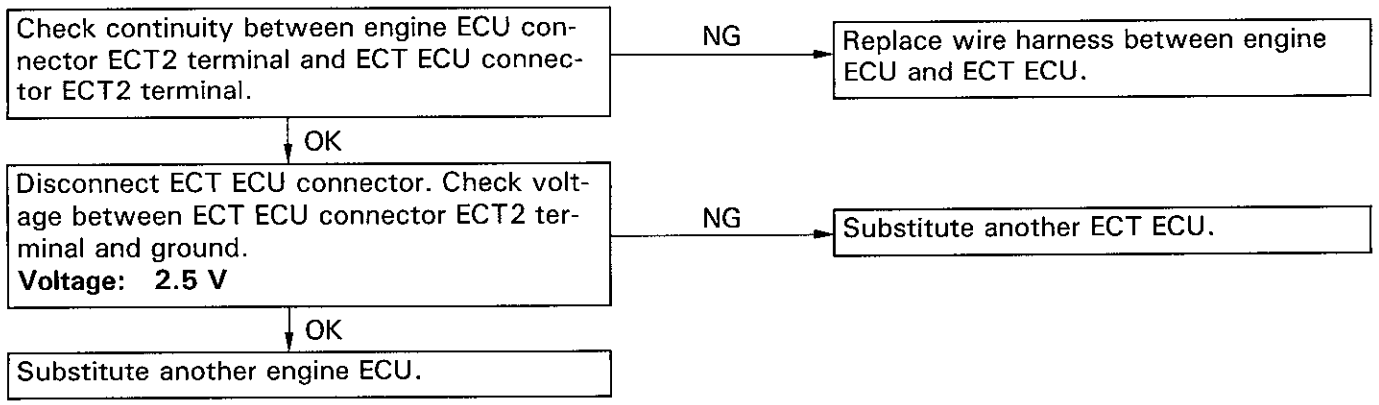

PRELIMINARY CHECK

1. CHECK FLUID LEVEL

HINT:

- The vehicle must have driven so that the engine and transmission are at normal operating temperature.

(Fluid temperature: 70 — 80°C or 158 — 176°F)

- Only use the COOL range on the dipstick as a rough reference when the fluid is replaced or the engine does not run.

(a) Park the vehicle on a level surface, set the parking brake.

(b) With the engine idling, shift the shift lever into all positions from P to L range and return to P range.

(c) Pull out the transmission dipstick and wipe it clean.

(d) Push it back fully into the tube.

(e) Pull it out and check that the fluid level is on the HOT range.

If the level is at the low side, add fluid.

Fluid type:

ATF DEXRON® II

NOTICE: Do not overfill.

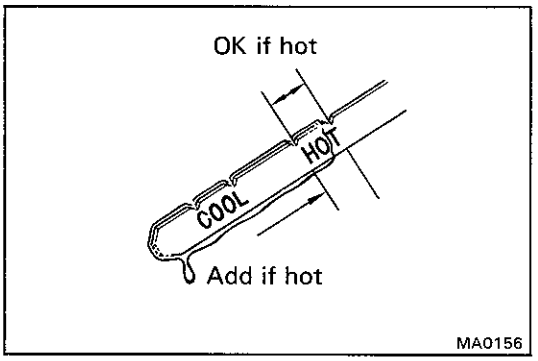

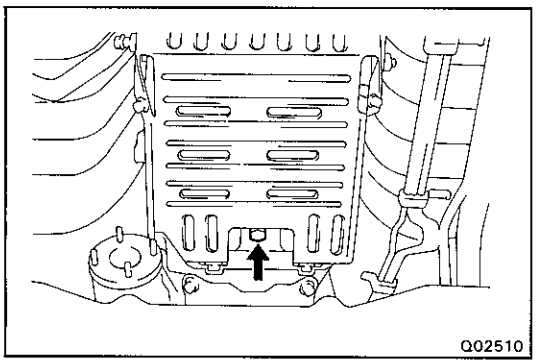

2. CHECK FLUID CONDITION

If the fluid smells burnt or is black, replace it in the following procedure.

(a) Remove the drain plug and drain the fluid.

(b) Reinstall the drain plug securely.

Torque: 27 N·m (280 kgf·cm, 20 ft·lbf)

(c) With the engine OFF, add new fluid through the oil filler tube.

Fluid type:

ATF DEXRON® II

Capacity:

Total

(w/o Oil cooler)
15.4 litters (16.3 US qts, 13.6 Imp.qts)
(w/o Oil cooler)
15.0 liters (15.9 US qts, 13.2 Imp.qts)

Drain and refill

6.0 litters (6.3 US qts, 5.3 Imp.qts)

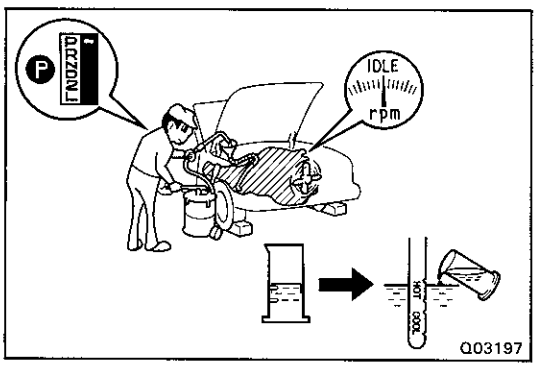

(d) Start the engine and shift the shift lever into all positions from P to L range and then shift into P range.

(e) With the engine idling, check the fluid level. Add fluid up to the COOL level on the dipstick.

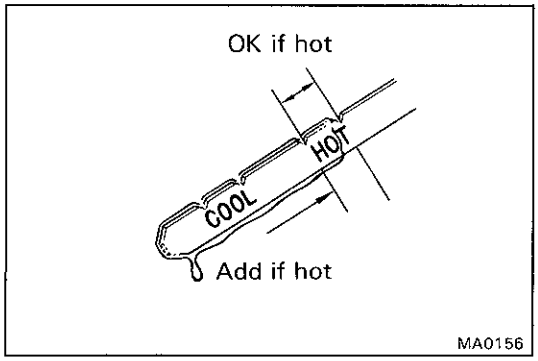

(f) Check the fluid level with the normal operating temperature (70 — 80°C or 158 — 176°F) and add as necessary.

NOTICE: Do not overfill.

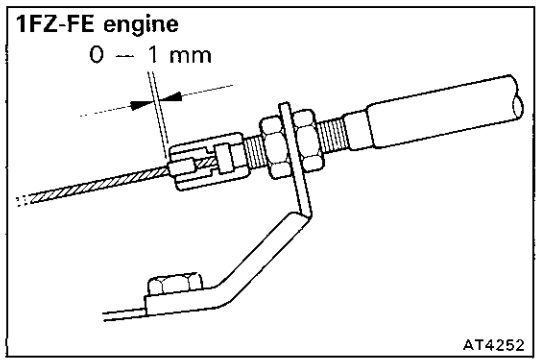

3. INSPECT THROTTLE CABLE

(a) Check that the throttle cable is installed correctly and not bent.

(b) With the throttle valve fully closed, measure the distance between the end of the boot and stopper on the cable.

Standard distance:

(1FZ-FE engine) 0 — 1 mm (0 — 0.04 in.)
(1HD-T engine) 0.5 — 1.5 mm (0.020 — 0.059 in.)

If the distance is not standard, adjust the cable by the adjusting nuts.

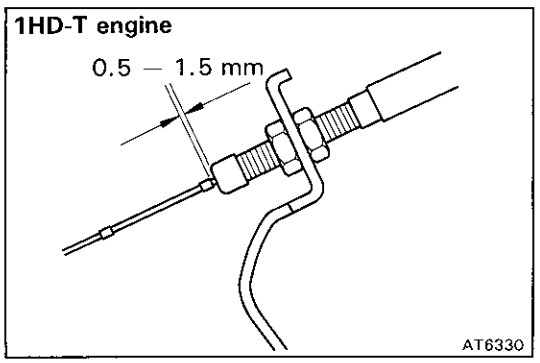

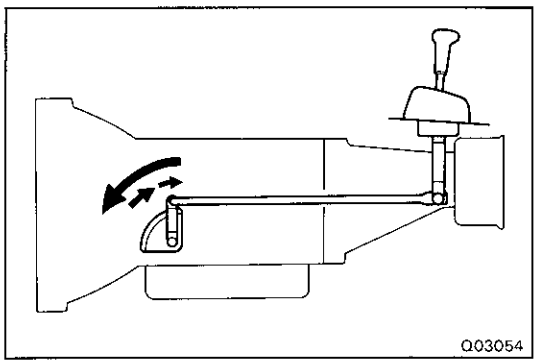

4. INSPECT TRANSMISSION SHIFT LEVER RANGE

When shifting the shift lever from the N range to other ranges, check that the lever can be shifted smoothly and accurately to each range and that the position indicator correctly indicates the position.

If the indicator is not aligned with the correct position, carry out the following adjustment procedures.

(a) Loosen the nut on the control rod.

(b) Push the control shaft lever fully toward the rear of the vehicle.

(c) Return the control shaft lever two notches to N range.

(d) Set the shift lever to N range.

(e) While holding the shift lever lightly toward the R range side, tighten the control rod nut.

(f) Start the engine and make sure that the vehicle moves forward when shifting the lever from the N to D range and reverse when shifting it to the R range.

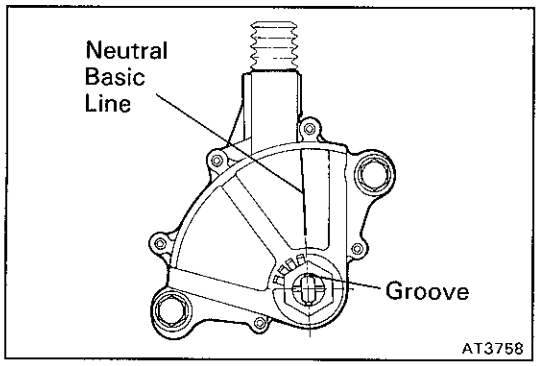

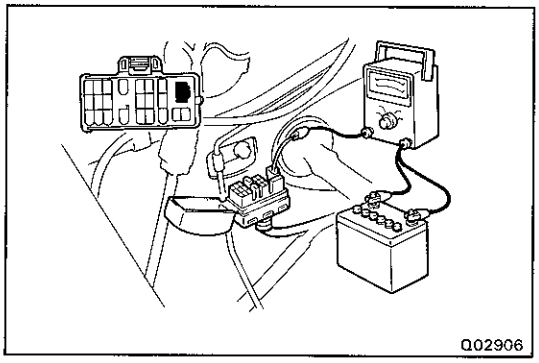

5. INSPECT NEUTRAL START SWTICH

Check that the engine can be started with the shift lever only in the N or P range, but not in other ranges.

If not as started above, carry out the following adjustment procedures.

(a) Loosen the neutral start switch bolts and set the shift lever to the N range.

(b) Align the groove and neutral basic line.

(c) Hold in position and tighten the bolts.

Torque: 13 N·m (130 kgf·cm, 9 ft·lbf)

6. INSPECT IDLE SPEED (N RANGE)

Connect tachometer test probe to the check connector terminal IG ⊖, inspect the idle speed.

Idle speed:

650 rpm

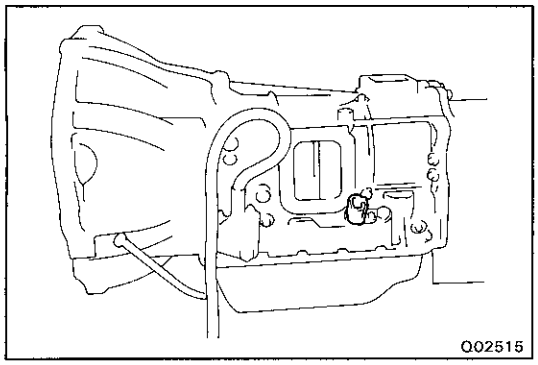

MANUAL SHIFTING TEST

HINT: With this test, it can be determine whether the trouble lies within the electrical circuit or is a mechanical problem in the transmission.

1. **DISCONNECT SOLENOID WIRE**

2. **INSPECT MANUAL DRIVING OPERATION**

   Check that the shift and gear position correspond with the table below.

   HINT: If the L, 2 and D range gear position are difficult to distinguish, perform the following road test.

   - While driving, shift through the L, 2 and D ranges. Check that the gear change corresponds to the shift position.
   - If any abnormality is found in the above test, the problem lies in transmission ifself.

3. **CONNECT SOLENOID WIRE**

4. **CANCEL OUT DIAGNOSTIC CODE**
   (See page AT-20)

REFERANCE: Possible gear position in accordance with solenoid operating conditions.

Range	NORMAL			NO.1 SOLENOID MALFUNCTIONING			NO.2 SOLENOID MALFUNCTIONING			BOTH SOLENOIDS MALFUNCTIONING		
	Solenoid Valve		Gear Position	Solenoid Valve		Gear Position	Solenoid Valve		Gear Position	Solenoid Valve		Gear Position
	No.1	No.2		No.1	No.2		No.1	No.2		No.1	No.2	
D range	ON	OFF	1st	x	ON (OFF)	3rd (O/D)	ON	x	1st	x	x	O/D
	ON	ON	2nd	x	ON	3rd	OFF (ON)	x	O/D (1st)	x	x	O/D
	OFF	ON	3rd	x	ON	3rd	OFF	x	O/D	x	x	O/D
	OFF	OFF	O/D	x	OFF	O/D	OFF	x	O/D	x	x	O/D
2 range	ON	OFF	1st	x	ON (OFF)	3rd (O/D)	ON	x	1st	x	x	3rd
	ON	ON	2nd	x	ON	3rd	OFF (ON)	x	3rd (1st)	x	x	3rd
	OFF	ON	3rd	x	ON	3rd	OFF	x	3rd	x	x	3rd
L range	ON	OFF	1st	x	OFF	1st	ON	x	1st	x	x	1st
	ON	ON	2nd	x	ON	2nd	ON	x	1st	x	x	1st

( ): No fail-safe function x: Malfunctions

ELECTRONIC CONTROL SYSTEM

PRECAUTION

Do not open the cover or the case of the TCM and various computer unless absolutely necessary. (If the IC terminals are touched, the IC may be destroyed by static electricity.)

ELECTRONIC CONTROL CIRCUIT

1FZ-FE engine

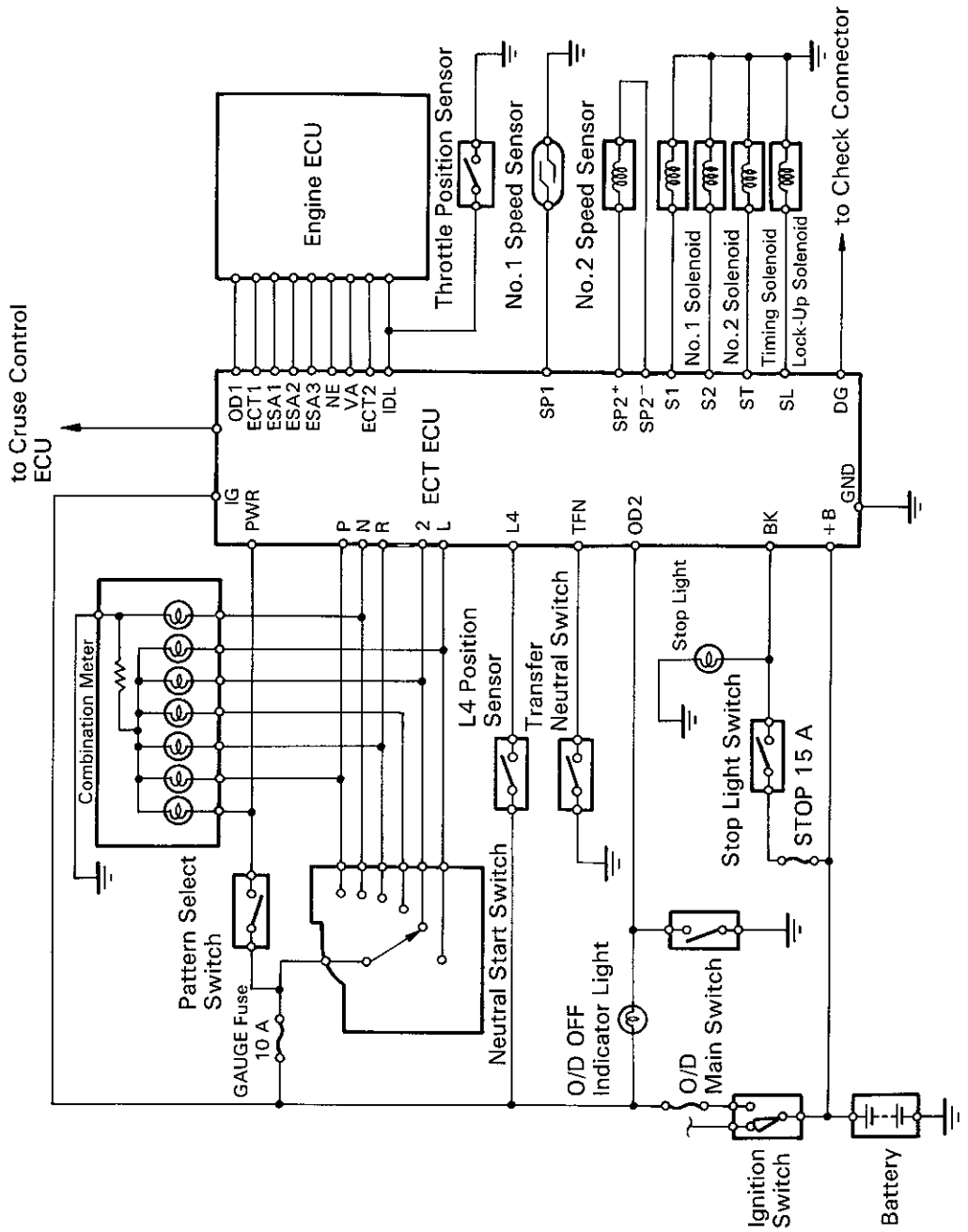

Q03072

1HD-T engine

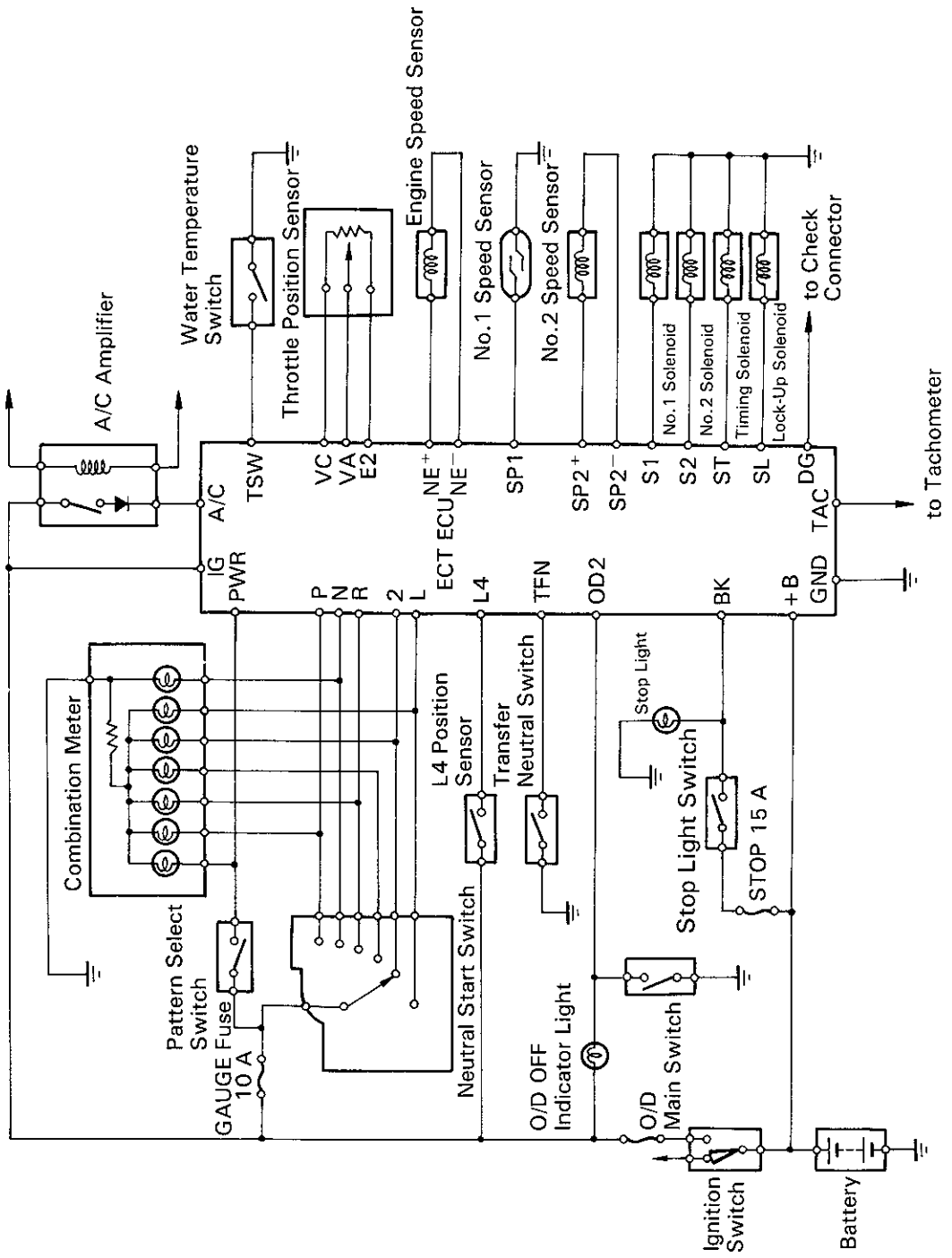

Q03193

ELECTRONIC CONTROL COMPONENTS

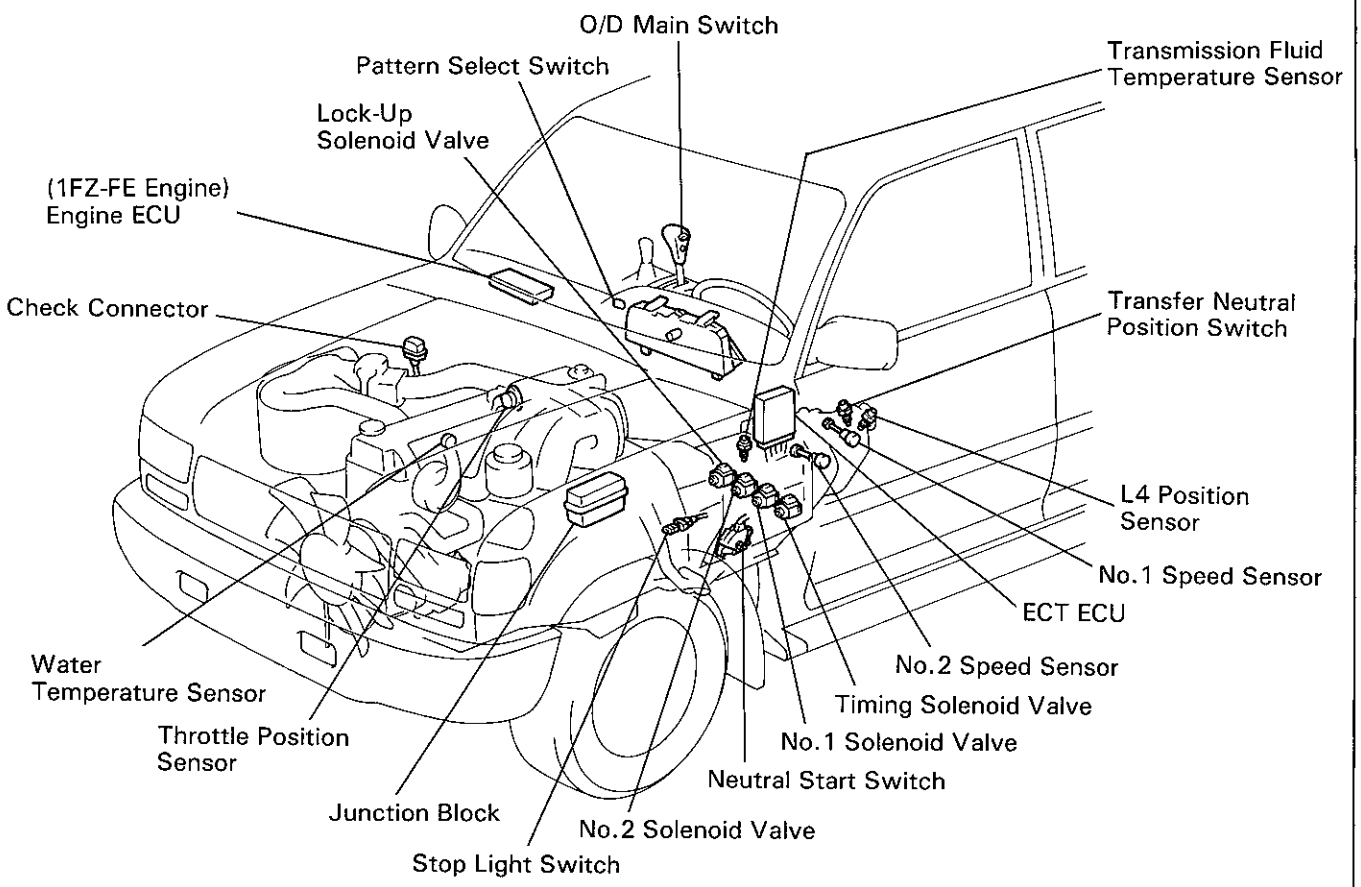

Q03073

TROUBLESHOOTING FLOW — CHART

Trouble No.1 No Shifting

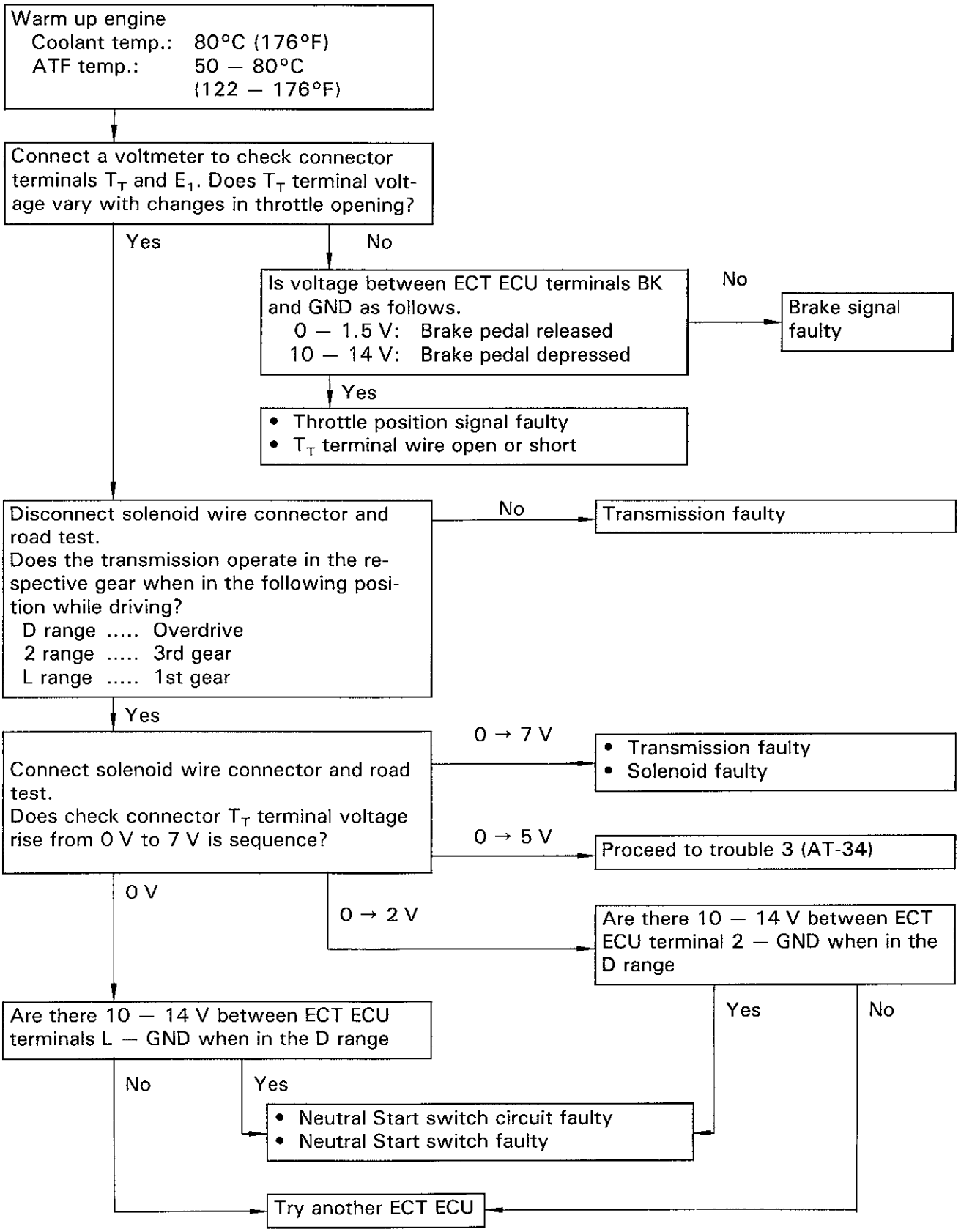

Trouble No.2 Shift point too high or too low

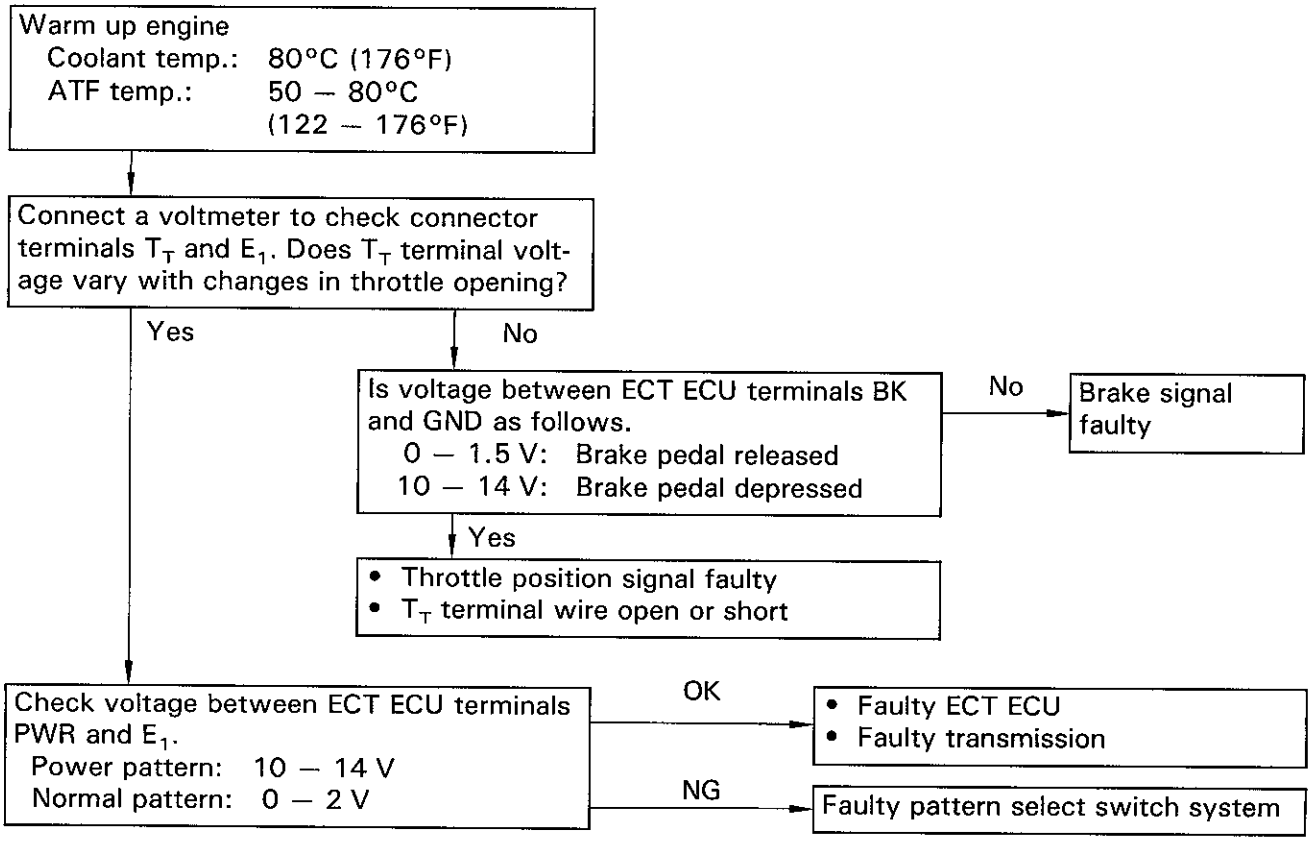

Trouble No.3 No up-shift to overdrive (After warm-up)

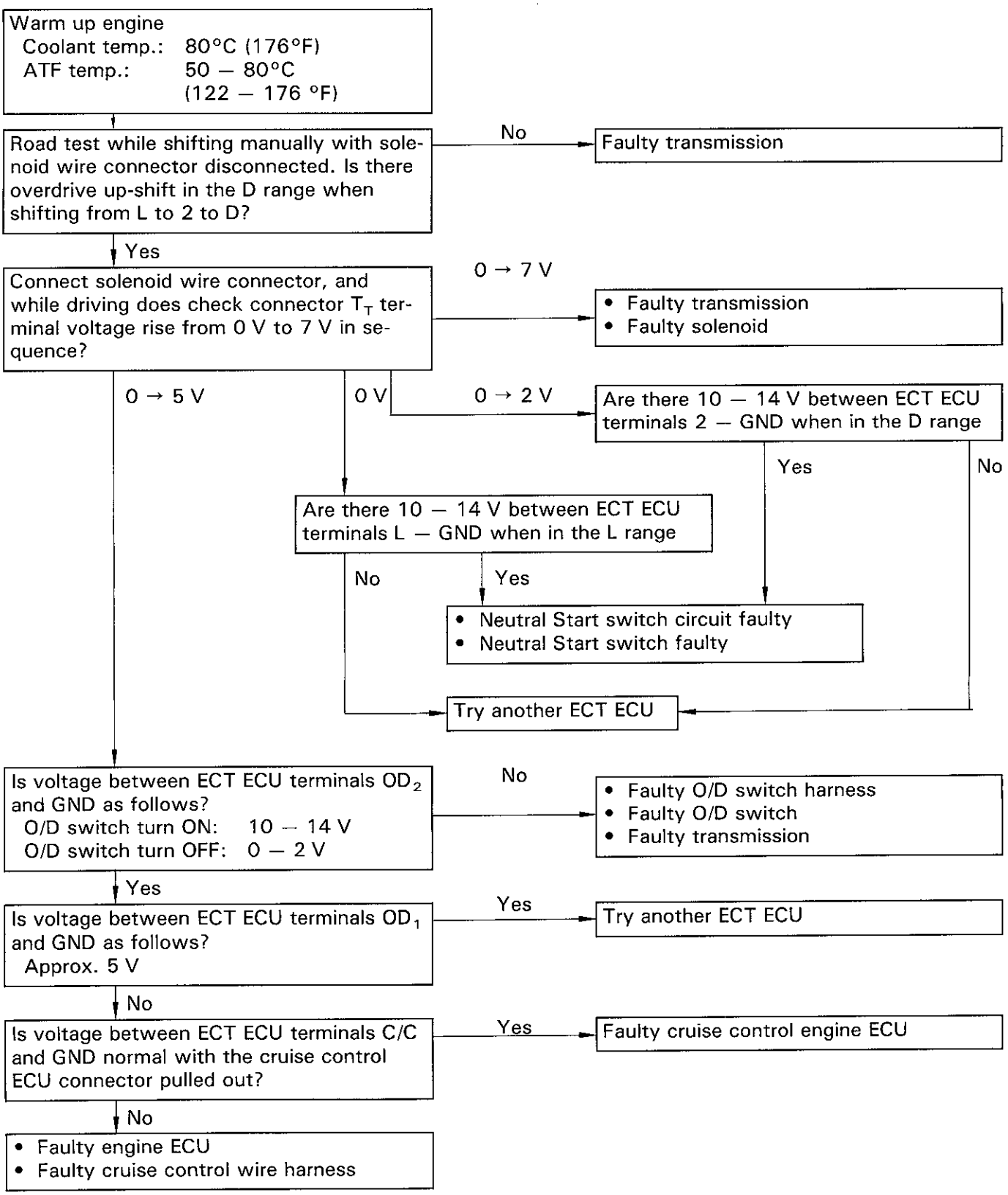

Trouble No.4 No lock-up (After warm-up)

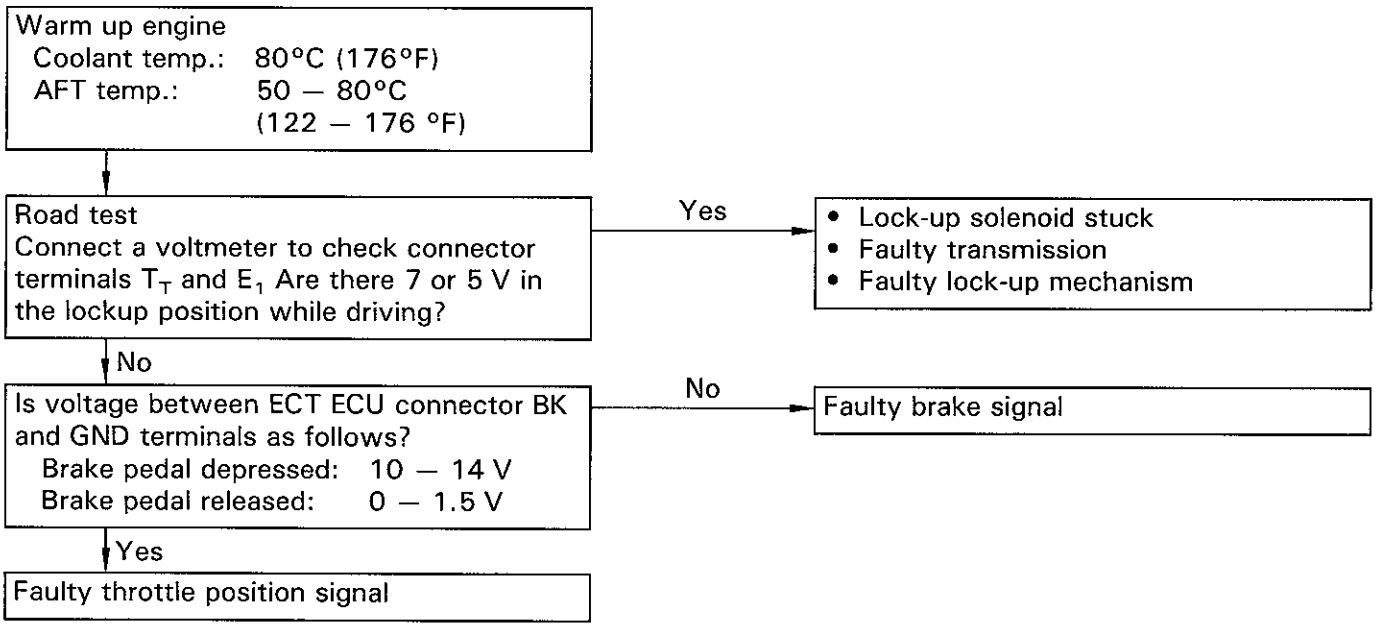

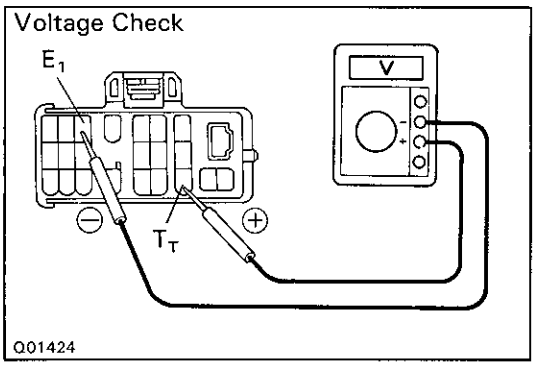

T_T TERMINAL VOLTAGE INSPECTION

1. INSPECT THROTTLE POSITION SENSOR SIGNAL

(a) Turn the ignition switch to ON. Do not start the engine.

(b) Connect a voltmeter to check connector terminals T_T and E_1.

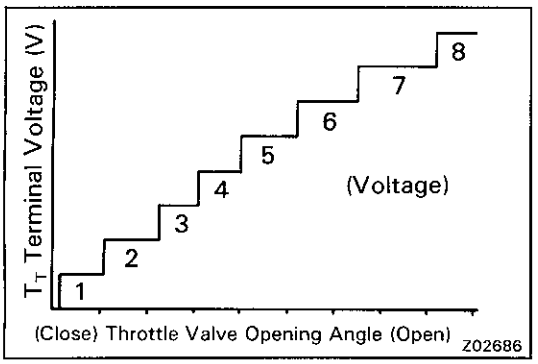

(c) While slowly depressing the accelerator pedal, check that T_T terminal voltage rises in sequence.

If the voltage does not change in proportion to the throttle opening angle, there is a malfunction in the throttle position sensor or circuit.

2. INSPECT BRAKE SIGNAL

(a) Depress the accelerator pedal until the T_T terminal indicates 8 V.

(b) Depress the brake pedal and check the voltage reading from the T_T terminal.

Brake pedal depressed ..... 0 V

Brake pedal released ..... 8 V

If not as indicated, there is a malfunction in either the stop light switch or circuit.

3. INSPECT EACH UP-SHIFT POSITION

(a) Warm up the engine.

Coolant temperature:
80°C (176 °F)

(b) Turn the O/D switch to "ON".

(c) Place the pattern select switch in "Normal" and the shift lever into the D range.

(d) During a road test (about 10 km/h or 6 mph) check that voltage at the T_T terminal is as indicated below for each up—shift position.

If the voltage rises from 0 V to 7 V in the sequence shown, the control system is okay.

The chart on the left shows the voltmeter reading and corresponding gears.

HINT: Determine the gear position by a light shock or change in engine rpm when shifting. The lock-up clutch will turn ON only infrequently during normal 2nd and 3rd gear operation. To trigger this action, press the accelerator pedal to 50% or more of its stroke. At more than 50%, the voltage may change in the sequence 2 V — 4 V — 6 V — 7 V.

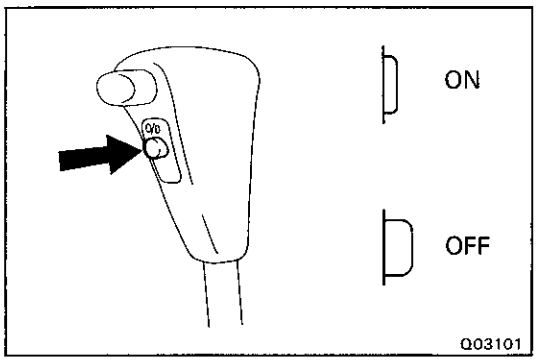

T_T Terminal (V)	Gear Position
0	1st
2	2nd
4	3rd
5	3rd Lock-up
6	O/D
7	O/D Lock-up

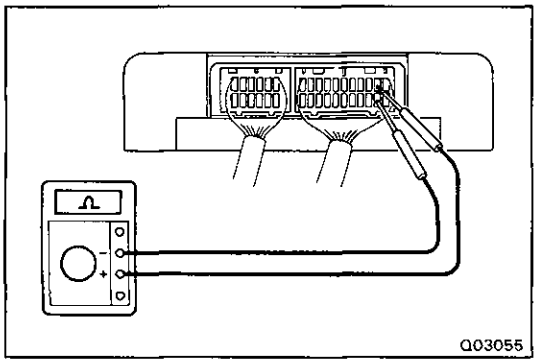

ELECTRONIC CONTROL COMPONENETS INSPECTION

1. INSPECT VOLTAGE OF ECT ECU

(a) Turn on the ignition switch.

(b) Measure the voltage at each terminal.

(1FZ-FE Engine)

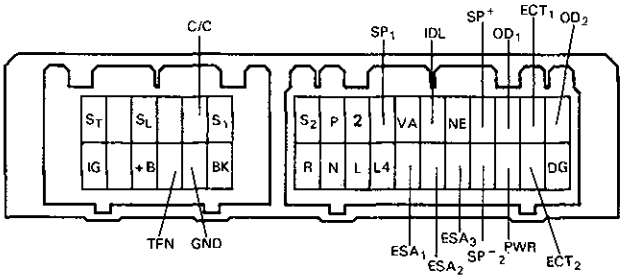

Q03115

Terminal	Measuring condition		Voltage (V)
S1 – GND	Stop Vehicle	N range	9 – 14
		D range	9 – 14
S2 – GND	Stop vehicle		0 – 1.5
SL – GND	Stop vehicle		0 – 1.5
ST – GND	Stop vehicle		0 – 1.5
BK – GND	Brake pedal is depressed		7.5 – 14
	Brake pedal is released		0 – 1.5
TFN – GND	Transfer position is N range		0 – 3
	Transfer position is except N range		9 – 14
+B – GND	Stop engine and ignition switch ON		9 – 14
IG – GND	Stop engine and ignition switch ON		9 – 14
OD_2 – GND	O/D main switch turned ON		9 – 14
	O/D main switch turned OFF		0 – 3
C/C – GND	Stop engine and ignition switch ON		9 – 14
ECT1 – GND	Stop engine and ignition switch ON		9 – 14
OD1 – GND	Water termperature 55°C (131°F) more than		9 – 14
	Water termperature 55°C (131°F) or less		0 – 3
$SP2^+$ – $SP2^-$	Vehicle moving		Pulse generation
SP1 – GND	Vehicle moving		Pulse generation
NE – GND	Engine idling speed		Pulse generation
IDL – GND	Throttle valve fully closed		0 – 3
	Throttle valve fully open		9 – 14
VA – GND	Throttle valve fully closed		3.5 – 4.5
	Throttle valve fully open		2.5 – 3.5

Terminal	Measuring condition	Voltage (V)
2 — GND	2 range	7.5 — 14
	Except 2 range	0 — 1.5
P — GND	P range	7.5 — 14
	Except P range	0 — 1.5
L — GND	L range	7.5 — 14
	Except L range	0 — 1.5
N — GND	N range	7.5 — 14
	Except N range	0 — 1.5
R — GND	R range	7.5 — 14
	Except R range	0 — 1.5
DG — GND	Engine stop and place ignition key at ON position	0 — 1.5
ECT2 — GND	Engine coolant temperature 80°C (176°F) more than	2 — 3
PWR — GND	PWR pattern	7.5 — 14
	NORM pattern	0 — 1.5
ESA1 — GND	Engine idling speed (Engine start after 10 second)	4.5 — 5.5
ESA2 — GND	Engine idling speed (Engine start after 10 second)	4.5 — 5.5
ESA3 — GND	Engine idling speed (Engine start after 10 second)	4.5 — 5.5
L4 — GND	Transfer position is L4 position	7.5 — 14
	Transfer position is except L4 position	0 — 15

(1HD-T Engine)

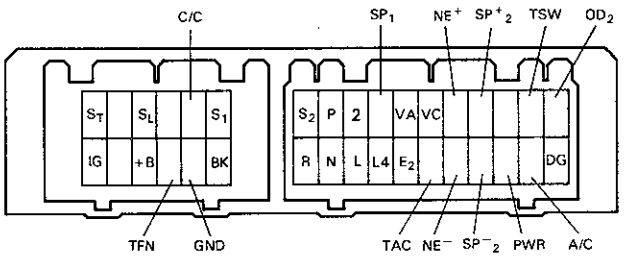

Q03115

Terminal	Measuring condition		Voltage (V)
S1 — GND	Stop Vehicle	N range	9 — 14
		D range	9 — 14
S2 — GND	Stop vehicle		0 — 1.5
SL — GND	Stop vehicle		0 — 1.5
ST — GND	Stop vehicle		0 — 1.5
BK — GND	Brake pedal is depressed		7.5 — 14
	Brake pedal is released		0 — 1.5
TFN — GND	Transfer position is N range		0 — 3
	Transfer position is except N range		9 — 14
+B — GND	Stop engine and ignition switch ON		9 — 14
IG — GND	Stop engine and ignition switch ON		9 — 14
OD_2 — GND	O/D main switch turned ON		9 — 14
	O/D main switch turned OFF		0 — 3

Terminal	Measuring condition	Voltage (V)
2 — GND	2 range	7.5 — 14
	Except 2 range	0 — 1.5
P — GND	P range	7.5 — 14
	Except P range	0 — 1.5
L — GND	L range	7.5 — 14
	Except L range	0 — 1.5
N — GND	N range	7.5 — 14
	Except N range	0 — 1.5
R — GND	R range	7.5 — 14
	Except R range	0 — 1.5
DG — GND	Engine stop and place ignition key at ON position	0 — 1.5
VC — GND	Ignition switch ON	4.5 — 5.5
TAC — GND	Engine idling speed	Pulse generation
TSW — GND	Water temperature 55°C (131°F) more than	9 — 14
	Water temperature 43°C (109°F) or less	0 — 3
$SP2^+$ — $SP2^-$	Vehicle moving	Pulse generation
SP1 — GND	Vehicle moving	Pulse generation
NE^+ — NE^-	Enigne idling speed	Pulse generation
A/C — GND	A/C control switch ON (Engine idling speed)	7.5 — 14
	A/C control switch OFF	0 — 1.5
VA — GND	Throttle valve fully closed (Warm up engine and A/C control switch OFF)	2.8 — 33
	Throttle valve fully open (Warm up engine and A/C control switch OFF)	0.3 — 0.8
PWR — GND	PWR pattern	7.5 — 14
	NORM pattern	0 — 1.5
L4 — GND	Transfer position is L4 range	7.5 — 14
	Transfer position is except L4 range	0 — 15

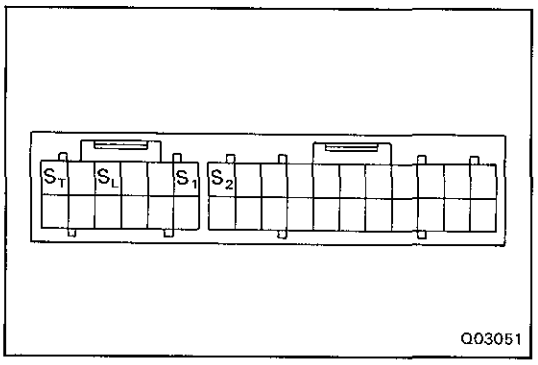

2. INSPECT SOLENOID

(a) Disconnect the connector from ECT ECU.

(b) Measure the resistance between S_1, S_2, S_L, S_T and ground.

Resistance:

11-15 Ω

(c) Apply battery voltage to each terminal. Check that an operation noise can be heard from the solenoid.

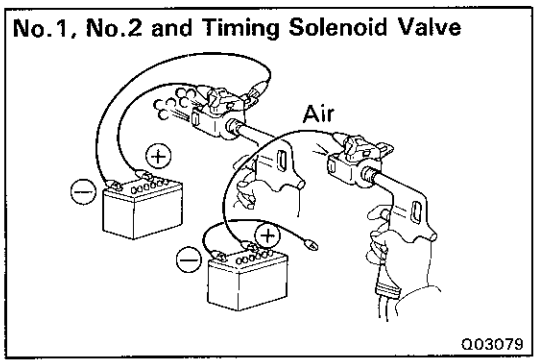

3. CHECK SOLENOID SEALS

If there is foreign material in the solenoid valve, there will be no fluid control even with sloenoid operation.

(a) Check No.1, No.2 and timing solenoid valves.

- Check that the solenoid valves do not leak when low-pressure compressed air is applied.
- When supply battery voltage to the solenoids, check that the solenoid valves open.

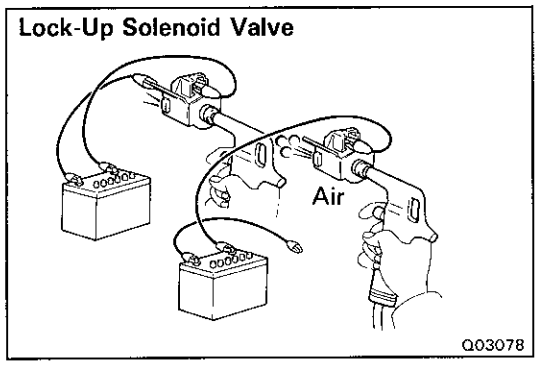

(b) Check the lock-up solenoid valve.

- Apply 490 kPa (5 kgf/cm^2, 71 psi) of compressed air, check that the solenoid valve opens.
- When supply battery voltage to the solenoid, check that the solenoid valve does not leak the air.

If malfunction is found during voltage inspection (step 1.), inspect the components listed below.

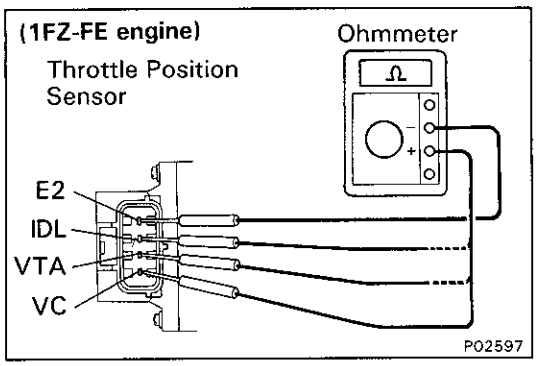

4. INSPECT THROTTLE POSITION SENSOR

(a) Using an ohmmeter, check the resistance between terminals.

(1FZ-FE)

Terminal	Throttle valve condition	Resistance (kΩ)
IDL — E_2	Fully closed	2.3 kΩ or less
	Open	Infinity
VC — E_2	—	2.5 — 5.9
VTA — E_2	Fully closed	0.2 — 5.7
	Fully open	2.0 — 10.2

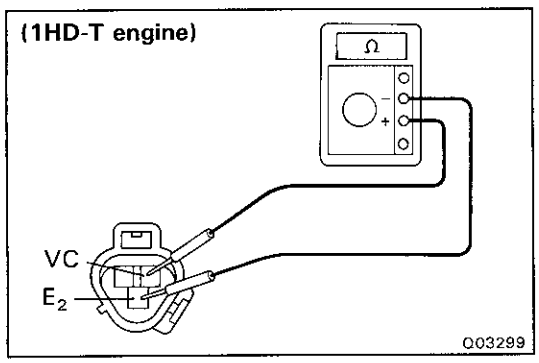

(1HD-T)

Terminal	Throttle valve condition	Resistance (kΩ)
VC — E_2	Fully open	1.84 — 3.42

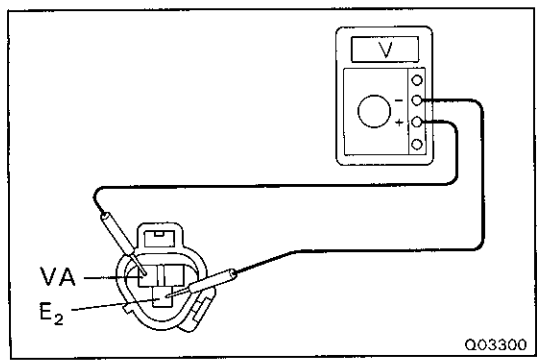

(b) (1HD-T engine)
When supply 5V to the between VC terminal and E_2 terminal, using a voltmeter, check the voltage between terminals.

Terminal	Throttle valve condition	Voltage (V)
VA — E_2	Fully open	0.96

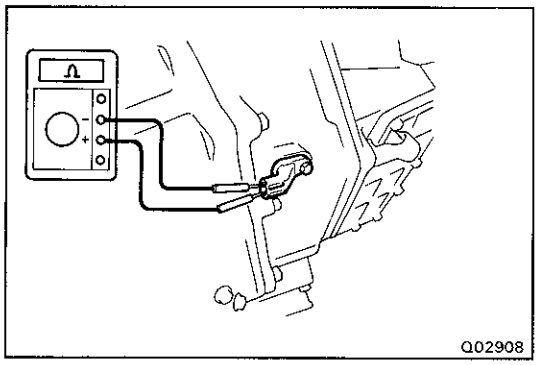

5. INSPECT NO.2 SPEED SENSOR

(a) Jack up the rear wheel on one side.

(b) Connect an ohmmeter between the terminals.

(c) Spin the wheel and check that the meter needle defects from 0 to ∞ Ω.

6. INSPECT NO.1 SPEED SENSOR

(See page BE-10)

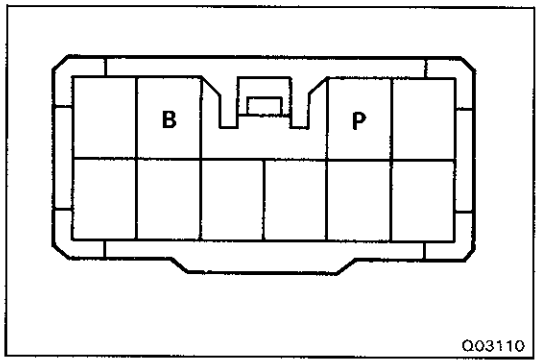

7. INSPECT PATTERN SELECT SWITCH

Using an ohmmeter, check the continuity of terminals for each switch position.

HINT: As there are diodes inside, be careful of the tester probe polarity.

Pattern \ Terminal	B	P
PWR	○——	——○
NORM		

V02104

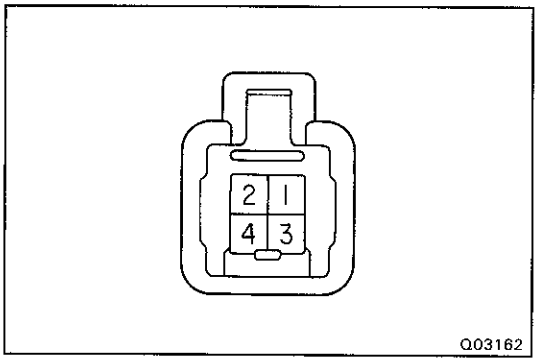

8. INSPECT O/D SWITCH

Using an ohmmeter, check the continuity of the terminals for each switch position.

SW position \ Terminal	2	4
ON		
OFF	○——	——○

V02105

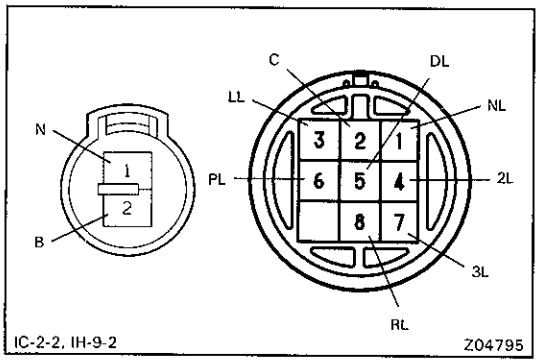

9. INSPECT NEUTRAL START SWITCH

Check that there is continuity between terminals.

○—○ : Continuity

Shift range \ Terminal	B	N	C	PL	RL	NL	DL	3I	2L
P	○—○		○—○						
R			○——	——○					
N	○—○		○——	——	——○				
D			○——	——	——	——	——○		
2			○——	——	——	——	——	——○	
L			○——	——	——	——	——	——	——○

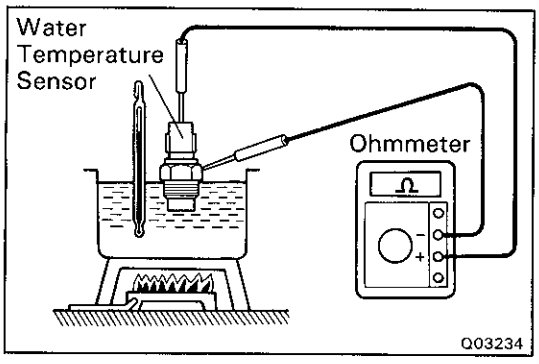

10. (1HD-T engine) INSPECT WATER TEMPERATURE SWITCH

Check that there is continuity at the temperature of 45°C — 55°C (113°F — 131°F).

If continuity is not as specified, replace the switch.

A/T FLUID TEMPERATURE WARNING SYSTEM CIRCUIT

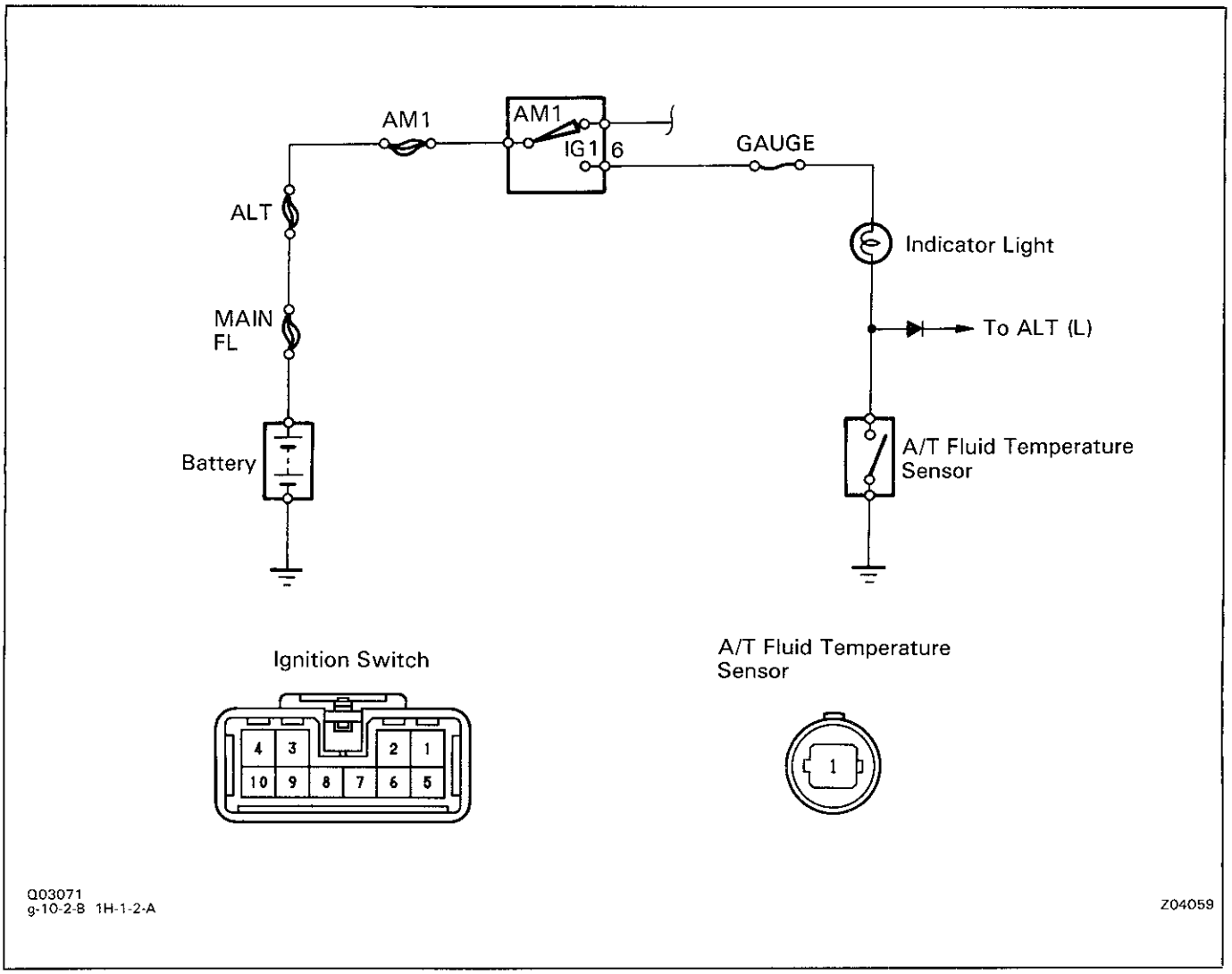

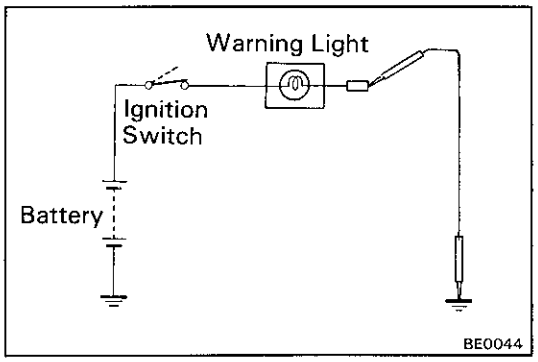

11. INSPECT A/T FLUID TEMPERATURE WARNING LIGHT

(a) Disconnect the connector from the temperature sensor. Connecct terminal of the wire harness side connector and body ground.

(b) Turn the ignition switch ON, check that the light go on.

If warning light does not light, test the bulb.

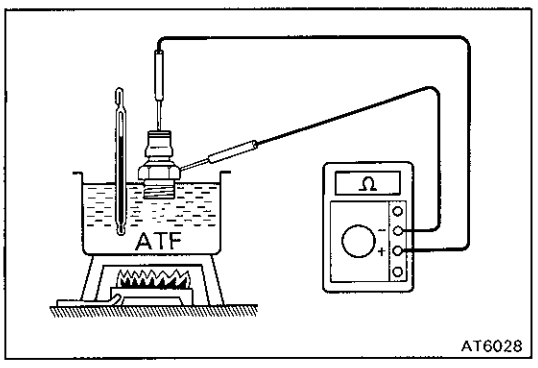

12. INSPECT A/T FLUID TEMPERATURE SENSOR

Check that there is continuity at the temperature of 145°C — 155°C (325°F — 343°F).

If continuity is not as specified, replace the sensor.

STALL TEST

The objective of this test is to check the overall performance of the transmission and engine by measuring the stall speeds in the D and R ranges.

NOTICE:

- **Perform the test at normal operating fluid temperature (50 — 80°C, or 122 — 176°F).**
- **Do not continuously run this test longer than 5 seconds.**
- **To ensure safety, conduct this test in a wide, clear, level area, which provides good traction.**
- **The stall test should always be carried out in pairs. One should observe the conditions of wheels or wheel stoppers outside the vehicle while the other is performing the test.**

MEASURE STALL SPEED

(a) Warm up the transmission fluid.

(b) Check the front and rear wheels.

(c) Connect a tachometer to the engine.

(d) Fully apply the parking brake.

(e) Keep your left foot pressed firmly on the brake pedal.

(f) Start the engine.

(g) Shift into the D range. Step all the way down on the accelerator pedal with your right foot. Quickly read the stall speed at this time.

NOTICE: Release the accelerator pedal and stop test if the rear wheels begin to rotate before the engine speed reaches specified stall speed.

Stall speed:

(1FZ-FE engine)	**2,150 ± 150 rpm**
(1HD-T engine)	**1,950 ± 150 rpm**

(h) Perform the same test in R range.

EVALUATION

(a) If the stall speed is the same for both positions but lower than specified value:

- Engine output may be insufficient
- Stator one-way clutch is not operating properly

HINT: If more than 600 rpm below the specified value, the torque converter clutch could be faulty.

(b) If the stall speed in D range is higher than specified:

- Line pressure too low
- Forward clutch slipping
- No.2 one-way clutch not operating properly
- O/D one-way clutch not operating properly

(c) If the stall speed in R range is higher than specified:

- Line pressure too low
- Direct clutch slipping
- First and reverse brake slipping
- O/D one-way clutch not operating properly

(d) If the stall speed in both R and D ranges are higher than specified:

- Line pressure too low
- Improper fluid level
- O/D one-way clutch not operating properly

STALL TEST

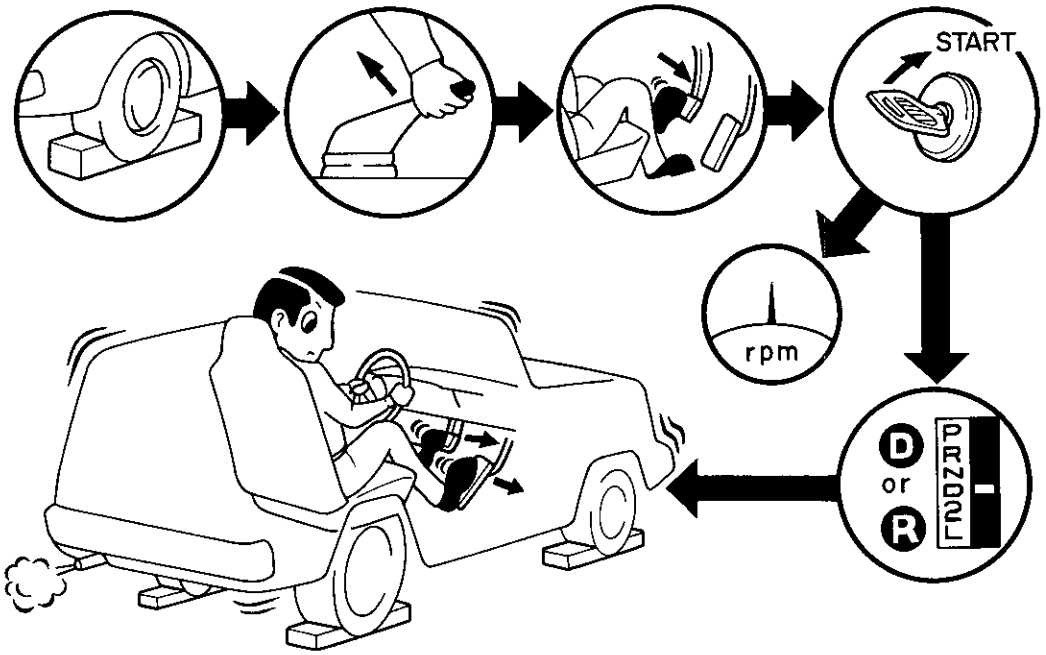

Q03057

TIME LAG TEST

When the shift lever is shifted while the engine is idling, there will be a certain time elapse or lag before the shock can be felt. This is used for checking the condition of the O/D direct clutch, forward clutch, direct clutch and first and reverse brake.

NOTICE:

- **Perform the test at normal operating fluid temperature (50 — 80°C or 122 — 176°F).**
- **Be sure to allow one minute interval between tests.**
- **Make three measurements and take the average value.**

MEASURE TIME LAG

(a) Fully apply the parking brake.

(b) Start the engine and check the idle speed.

Idle speed:
650 rpm (N range)

(c) Shift the shift lever from N to D range. Using a stop watch, measure the time it takes from shifting the lever until the shock is felt.

Time lag:
Less than 1.0 seconds

(d) In same manner, measure the time lag for N → R.

Time lag:
Less than 1.5 seconds

EVALUATION

(a) If N → D time lag is longer than specified:

- Line pressure too low
- Forward clutch worn
- O/D one-way clutch not operating properly

(b) If N → R time lag is longer than specified:

- Line pressure too low
- Direct clutch worn
- First and reverse brake worn
- O/D one-way clutch not operating properly

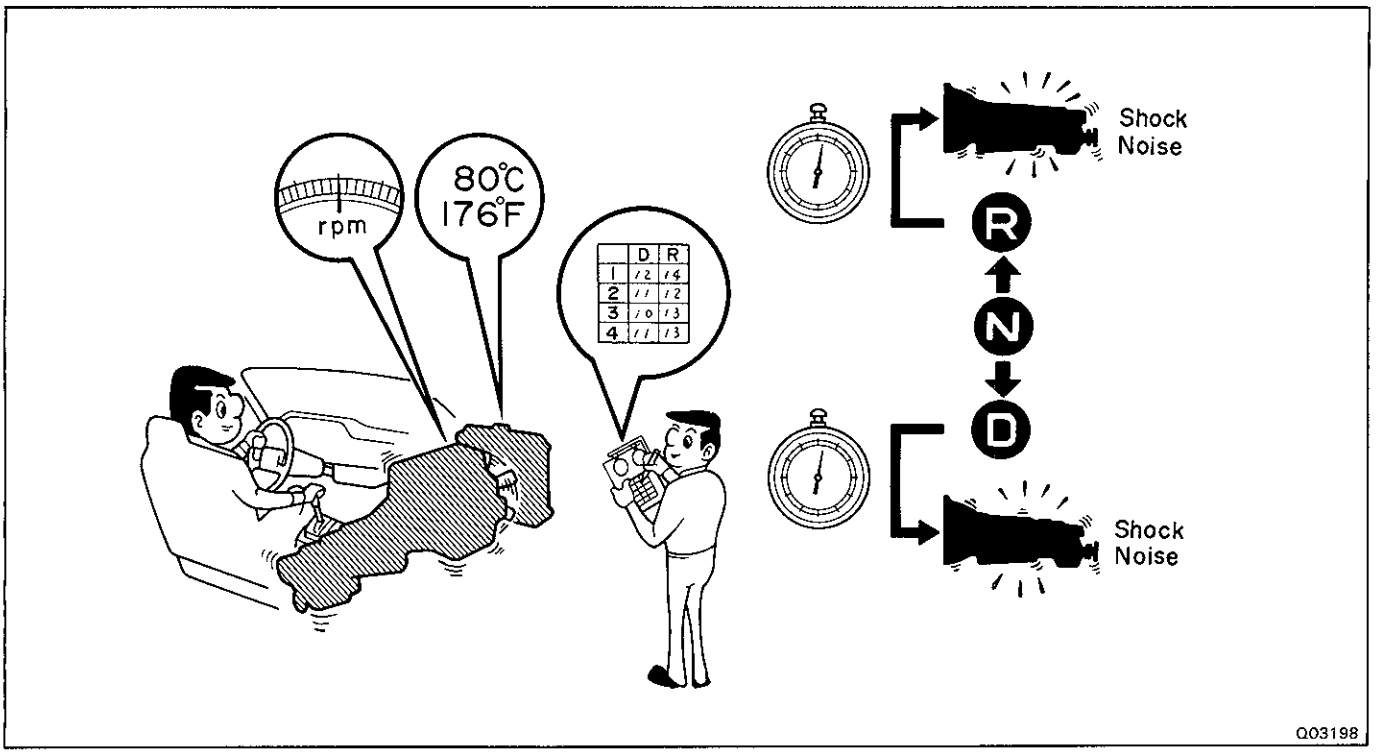
rpm
80°C
176°F
D R
1 12 14
2 11 12
3 10 13
4 11 13
Shock
Noise
R
N
D
Shock
Noise
Q03198

HYDRAULIC TEST

PREPARATION

(a) Warm up the transmission fluid.

(b) Remove the transmission case test plug and connect the hydraulic pressure gauge.

SST 09992-00094 (Oil pressure gauge)

NOTICE:

- **Perform the test at normal operating fluid temperature (50 — 80°C or 122 — 176°F).**
- **The line pressure test should always be carried out in pairs. One should observe the conditions of wheels or wheel stoppers outside the vehicle while the other is performing the test.**

MEASURE LINE PRESSURE

(a) Fully apply the parking brake and chock the four wheels.

(b) Start the engine and check idling rpm.

(c) Keep your left foot pressed firmly on the brake pedal and shift into D range.

(d) Measure the line pressure when the engine is idling.

(e) Press the accelerator pedal all the way down. Quickly read the highest line pressure when engine speed reaches stall speed.

NOTICE: Release the accelerator pedal and stop test if the rear wheels begin to rotate before the engine speed reaches specified stall speed.

(f) In the same manner, perform the test in R range.

(1FZ-FE engine)

kPa (kgf/cm^2, psi)

D range		R range	
Idling	Stall	Idling	Stall
461 — 520 (4.7 — 5.3, 68 — 77)	971 — 1,226 (9.9 — 12.5, 144 — 181)	657 — 843 (6.7 — 8.6, 97 — 125)	1,648 — 1,853 (16.8—18.9, 244—274)

(1HD-T engine)

D range		R range	
Idling	Stall	Idling	Stall
431 — 510 (4.4 — 5.2, 63 — 74)	971 — 1,226 (9.9 — 12.5, 141 — 178)	637 — 843 (6.5 — 8.6, 92 — 122)	1,608 — 1,853 (16.4—18.9, 233—269)

If the measured pressures are not up to specified values, recheck the throttle cable adjustment and perform a retest.

EVALUATION

(a) If the measured values at all positions are higher than specified:
- Throttle cable out of adjustment
- Throttle valve defective
- Regulator valve defective

(b) If the measured values at all positions are lower than specified:
- Throttle cable out of adjustment
- Throttle valve defective
- Regulator valve defetive
- Oil pump defective
- O/D direct clutch defective

(c) If pressure is low in the D range only:
- D range circuit fluid leakage
- Forward clutch defective

(d) If pressure is low in the R range only:
- R range circuit fluid leakage
- Direct clutch defective
- First and reverse brake defective

HYDRAULIC TEST

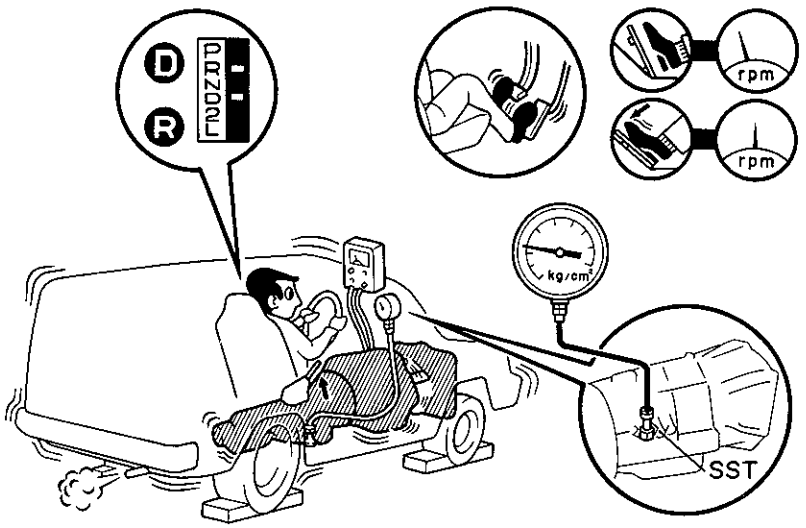

Q03199

ROAD TEST

NOTICE: Perform the test at normal operating fluid temperature (50 — 80°C or 122 — 176°F).

1. D RANGE TEST IN NORM AND PWR PATTERN RANGES

Shift into the D range and hold the accelerator pedal constant at the full throttle valve opening position.

Check the following:

(a) 1 — 2, 2 — 3 and 3 — O/D up-shifts should take place, and shift points should conform to those shown in the automatic shift schedule.

Conduct a test under both Normal and Power patterns.

HINT: There is no O/D up-shift or lock-up when the coolant temperature is below 55°C (131°F).

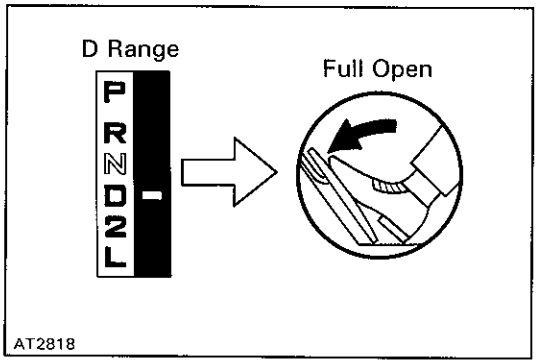

EVALUATION

(1) If there is no 1 → 2 up-shift:
- No.2 solenoid is stuck.
- 1 — 2 shift valve is stuck.

(2) If there is no 2 → 3 up-shift:
- No.1 solenoid is stuck.
- 2 — 3 shift valve is stuck.

(3) If there is no 3 → O/D up-shift:
- 3 — 4 shift valve is stuck.

(4) If the shift point is defective:
- Throttle valve, 1 — 2 shift valve, 2 — 3 shift valve, 3 — 4 shift valve etc., are defective.

(5) If the lock-up is defective:
- Lock-up solenoid is stuck.
- Lock-up relay valve is stuck.

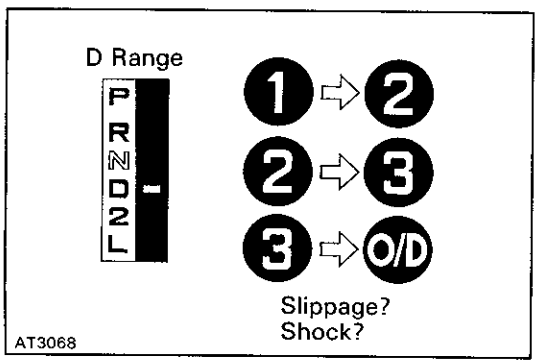

(b) In the same manner, check the shock and slip at the 1 → 2, 2 → 3, and 3 → O/D up-shifts.

EVALUATION

If the shock is excessive:
- Line pressure is too high.
- Accumulator is defective.
- Check ball is defective.

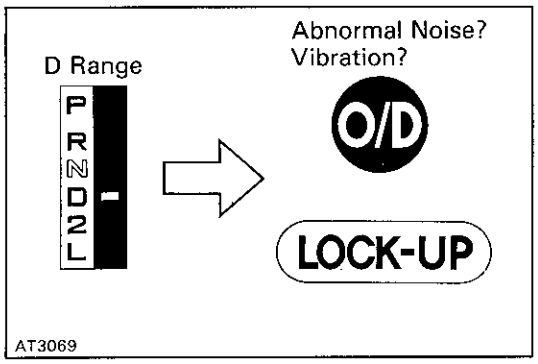

(c) Run at the D Range lock-up or O/D gear and check for abnormal noise and vibration.

HINT: The check for the cause of abnormal noise and vibration must be made with extreme care as it could also be due to loss of balance in the propeller shaft, differential, torque converter, etc.

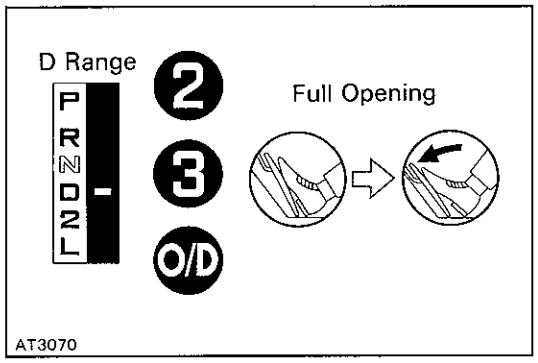

(d) While running in the D range, 2nd, 3rd and O/D gears, check to see that the possible kick-down vehicle speed limits for 2 → 1, 3 → 2 and O/D → 3 kick-downs conform to those indicated on the automatic shift schedule.

(e) Check for abnormal shock and slip at kick-down.

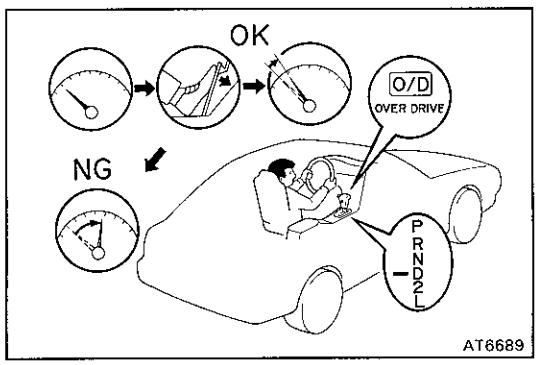

(f) Check for the lock-up mechanism.

(1) Drive in D position, O/D gear, at a steady speed (lock-up ON) of about 95 km/h (59 mph).

(2) Lightly depress the accelerator pedal and check that the engine rpm does not change abruptly.

If there is a big jump in engine rpm, there is no lock-up.

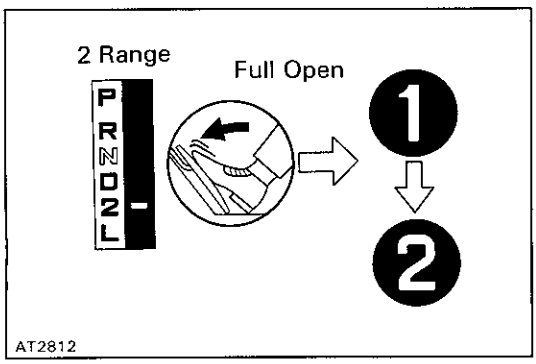

2. 2 RANGE TEST

Shift into the 2 range and, while driving with the accelerator pedal held constantly at the full throttle valve opening position, push in one of the pattern selectors and check on the following points.

(a) Check to see that the 1 → 2 up-shift takes place and that the shift point conforms to it shown on the automatic shift schedule.

HINT: There is no O/D up-shift and lock-up in the 2 position.

(b) While running in the 2 range and 2nd gear, release the acclerator pedal and check the engine braking effect.

EVALUATION

If there is no engine braking effect:

- Second coast brake is defective.

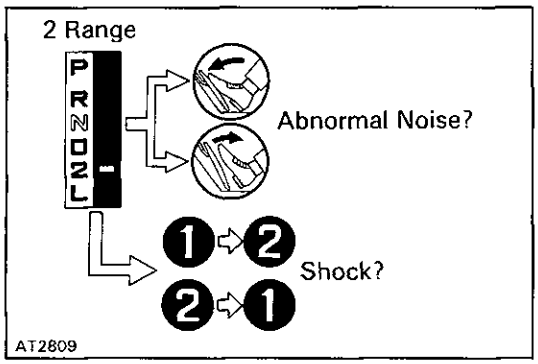

(c) Check for abnormal noise at acceleration and deceleration, and for shock at up-shift and down-shift.

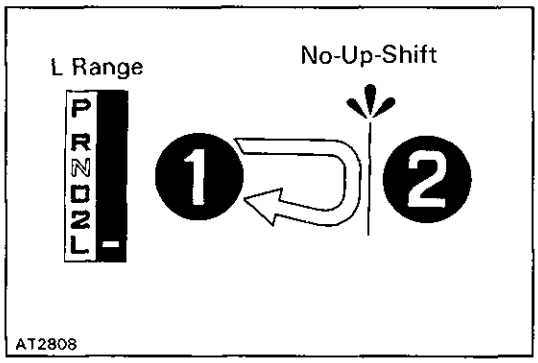

3. L RANGE TEST

(a) While running in the L range, check to see that there is no up-shift to 2nd gear.

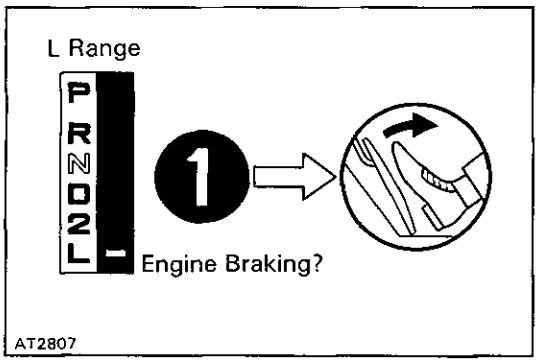

(b) While running in the L range, release the accelerator pedal and check the engine braking effect.

EVALUATION

If there is no engine braking effect:

- First and reverse brake is defective.

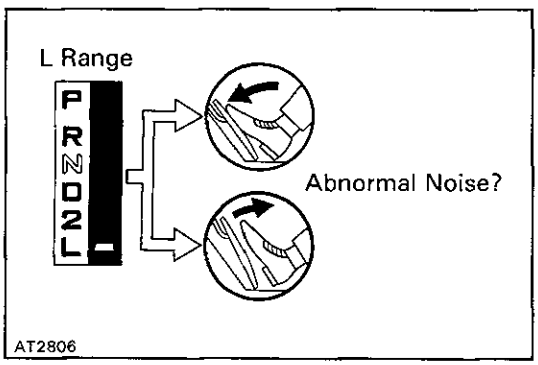

(c) Check for abnormal noise during acceleration and deceleration.

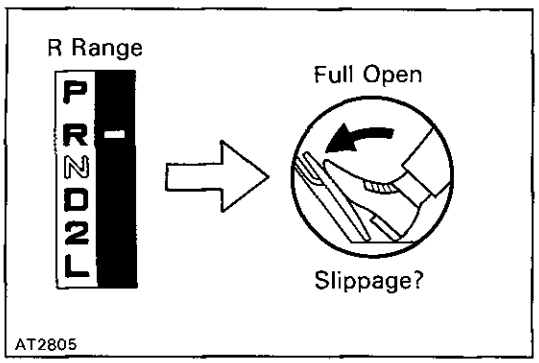

4. R RANGE TEST

Shift into the R range and, while starting at full throttle, check for slipping.

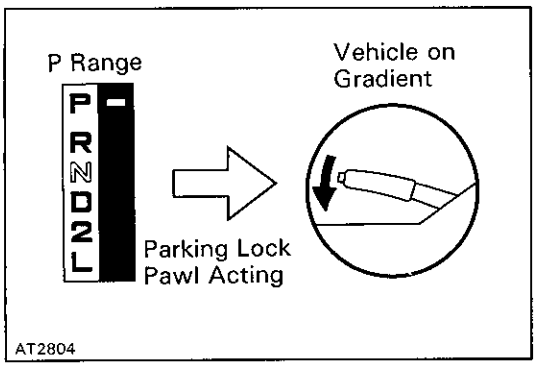

5. P RANGE TEST

Stop the vehicle on a gradient (more than 5°) and after shifting into the P range, release the parking brake. Then check to see that the parking lock pawl holds the vehicle in place.

AUTOMATIC SHIFT SCHEDULE

Engine: 1FZ-FE
Tire size: 7.50R16-6

km/h (mph)

Throttle valve opening		100 %			5 %		100 %		
Gear position		1 → 2	2 → 3	3 → O/D	Lock-up ON	Lock-up OFF	O/D → 3	3 → 2	2 → 1
D position	Normal mode	53—60 (33—37)	108—122 (67—76)	153—170 (95—106)	61—69 (38—43)	55—63 (34—39)	147—163 (91—101)	99—109 (62—68)	42—49 (26—30)
	Power mode	53—60 (33—37)	108—122 (67—76)	153—170 (95—106)	89—99 (55—62)	73—80 (45—50)	147—163 (91—101)	99—109 (62—68)	42—49 (26—30)
2 position	Normal mode Power mode	—	—	—	—	—	—	118—132 (73—82)	—
L position	Normal mode Power mode	—	—	—	—	—	—	—	60—68 (37—42)

Engine: 1FZ-FE
Tire size: 245/85-R16

km/h (mph)

Throttle valve opening		100 %			5 %		100 %		
Gear position		1 → 2	2 → 3	3 → O/D	Lock-up ON	Lock-up OFF	O/D → 3	3 → 2	2 → 1
D position	Normal mode	56—62 (35—39)	114—125 (71—78)	161—174 (100—108)	64—70 (40—43)	58—64 (36—40)	154—167 (96—103)	105—112 (65—70)	44—48 (27—30)
	Power mode	56—62 (35—39)	114—125 (71—78)	161—174 (100—108)	93—100 (58—62)	73—80 (45—50)	154—167 (96—103)	105—112 (65—70)	44—48 (27—30)
2 position	Normal mode Power mode	—	—	—	—	—	—	124—135 (77—84)	—
L position	Normal mode Power mode	—	—	—	—	—	—	—	63—69 (39—43)

Engine: 1FZ-FE
Tire size: 215/80-R16

km/h (mph)

Throttle valve opening		100 %			5 %		100 %		
Gear position		1 → 2	2 → 3	3 → O/D	Lock-up ON	Lock-up OFF	O/D → 3	3 → 2	2 → 1
D position	Normal mode	49—54 (30—34)	101—111 (63—69)	143—153 (89—95)	63—69 (39—43)	57—63 (35—39)	137—147 (85—91)	93—99 (58—62)	40—45 (25—28)
	Power mode	49—54 (30—34)	101—111 (63—69)	143—153 (89—95)	83—89 (52—55)	72—78 (45—48)	137—147 (85—91)	93—99 (58—62)	40—45 (25—28)
2 position	Normal mode Power mode	—	—	—	—	—	—	110—119 (68—74)	—
L position	Normal mode Power mode	—	—	—	—	—	—	—	56—61 (34—38)

Engine: 1FZ-FE
Tire size: 275/70-R16

km/h (mph)

Throttle valve opening		100 %			5 %		100 %		
Gear position		1 → 2	2 → 3	3 → O/D	Lock-up ON	Lock-up OFF	O/D → 3	3 → 2	2 → 1
D position	Normal mode	52—58 (32—36)	106—117 (66—73)	152—163 (94—101)	60—66 (37—41)	55—60 (34—37)	145—156 (90—97)	98—104 (61—65)	42—47 (26—29)
	Power mode	52—58 (32—36)	106—117 (66—73)	152—163 (94—101)	88—94 (55—58)	68—74 (42—46)	145—156 (90—97)	98—104 (61—65)	42—47 (26—29)
2 position	Normal mode Power mode	—	—	—	—	—	—	116—127 (72—79)	—
L position	Normal mode Power mode	—	—	—	—	—	—	—	59—65 (37—40)

Engine: 1HD-T
Tire size: 7.50R16-6

km/h (mph)

Throttle valve opening		100 %			5 %		100 %		
Gear position		1 → 2	2 → 3	3 → O/D	Lock-up ON	Lock-up OFF	O/D → 3	3 → 2	2 → 1
D position	Normal mode	41—47 (25—29)	81—90 (50—56)	122—136 (76—85)	56—64 (35—40)	50—58 (31—36)	115—129 (71—80)	75—82 (47—51)	33—39 (21—24)
	Power mode	41—47 (25—29)	81—90 (50—56)	122—136 (76—85)	78—87 (48—54)	72—80 (45—50)	115—129 (71—80)	75—82 (47—51)	34—41 (21—25)
2 position	Normal mode Power mode	—	—	—	—	—	—	89—98 (55—61)	—
L position	Normal mode Power mode	—	—	—	—	—	—	—	38—45 (24—28)

Engine: 1HD-T
Tire size: 245/85-R16

km/h (mph)

Throttle valve opening		100 %			5 %		100 %		
Gear position		1 → 2	2 → 3	3 → O/D	Lock-up ON	Lock-up OFF	O/D → 3	3 → 2	2 → 1
D position	Normal mode	43—49 (27—30)	85—92 (53—57)	129—140 (80—87)	59—65 (37—40)	53—59 (33—36)	121—132 (75—82)	75—82 (47—51)	34—40 (21—25)
	Power mode	43—49 (27—30)	85—92 (53—57)	129—140 (80—87)	82—89 (51—55)	75—82 (47—51)	121—132 (75—82)	75—82 (47—51)	36—42 (22—26)
2 position	Normal mode Power mode	—	—	—	—	—	—	93—100 (58—62)	—
L position	Normal mode Power mode	—	—	—	—	—	—	—	40—46 (25—29)

Engine: 1HD-T
Tire size: 215/80-R16

km/h (mph)

Throttle valve opening		100 %			5 %		100 %		
Gear position		1 → 2	2 → 3	3 → O/D	Lock-up ON	Lock-up OFF	O/D → 3	3 → 2	2 → 1
D position	Normal mode	37—42 (23—26)	76—81 (47—50)	113—123 (70—76)	53—58 (33—36)	47—52 (29—32)	108—117 (67—73)	67—72 (42—44)	30—35 (19—22)
	Power mode	37—42 (23—26)	76—81 (47—50)	113—123 (70—76)	73—79 (45—49)	66—72 (41—45)	108—117 (67—73)	67—72 (42—44)	32—37 (20—23)
2 position	Normal mode Power mode	—	—	—	—	—	—	83—89 (52—55)	—
L position	Normal mode Power mode	—	—	—	—	—	—	—	35—40 (22—25)

Engine: 1HD-T
Tire size: 275/70-R16

km/h (mph)

Throttle valve opening		100 %			5 %		100 %		
Gear position		1 → 2	2 → 3	3 → O/D	Lock-up ON	Lock-up OFF	O/D → 3	3 → 2	2 → 1
D position	Normal mode	41—46 (25—29)	80—86 (50—53)	120—131 (75—81)	56—61 (35—38)	50—55 (31—34)	114—124 (71—77)	70—76 (43—47)	32—37 (20—23)
	Power mode	41—46 (25—29)	80—86 (50—53)	120—131 (75—81)	77—83 (48—52)	70—76 (43—47)	114—124 (71—77)	70—76 (43—47)	34—39 (21—24)
2 position	Normal mode Power mode	—	—	—	—	—	—	88—94 (55—58)	—
L position	Normal mode Power mode	—	—	—	—	—	—	—	38—43 (24—27)

TROUBLESHOOTING MATRIX CHART

You will find the troubles easier using the table will shown below. In this table, each number shows the priority of cause in troubles. Check each part in order. If necessary, replace these parts.

(ON — VEHICLE)

Trouble \ Parts Name		1—2 shift valve	2—3 shift valve	3—4 shift valve	Low coast modulator valve	Reverse control valve	Manual valve	No.1 solenoid	No.2 solenoid	Timing solenoid	Lock-up solenoid	C_o exhaust valve	B_o accumulator	C_1 accumulator	B_1 accumulator	C_2 accumulator	2—3 shift timing valve	Modulator valve	Accumulator control valve	Lock-up signal valve	Lock-up control valve	OFF-vehicle repairmatrix chart	ECT ECU	Throttle cable	Check ball
See Page		★	★	★	★	★	★	★	★	★	★	★	★	★	★	★	★	★	★	★	★	AT-57	★	★	★
Does not move in any forward range																						1			
Does not move in reverse range						3		2	2													4	1		
Does not move in any range							2															3	1		
No up-shift	1st → 2nd	3							2													4	1		
	2nd → 3rd		3					2														4	1		
	3rd → O/D			3					2													4	1		
No down-shift	O/D → 3rd			3					2													4	1		
	3rd → 2nd		3					2														4	1		
	2nd → 1st	3							2			4											1		
Shift point too high or too low																							1	2	
Harsh engagement	"N" → "R"															1			2			3			
	"N" → "D"													1					2			3			
	"N"→ "D", "N" → "R"																		3			2		1	
	1st → 2nd														4				5			6	1	2	3
	2nd → 3rd									3						5	4		6			7	1	2	
	3rd → O/D												4						5			6	1	2	3
	1st → 2nd → 3rd → O/D																		2			3		1	
	O/D → 3rd																					4	1	2	3
	3rd → 2nd									3					6		5		7			8	1	2	4
Slip	Forward & Reverse																					1			
	"R" range																					1			
	1st																					1			
	2nd																					1			
	3rd																					1			
	O/D																					1			
No engine braking	1st ("L" range)				4				2	3								5				6	1		
	2nd ("2" range)																					1			
No kick-down		4	4	4				3	3														1	2	
Poor acceleration									2			3										4	1		
No lock-up											2									3	4	5	1		

Remark ★: Refer to A442F Automatic Transmission Repair Manual. (Pub. No. RM314E)

(OFF — VEHICLE)

Trouble \ Parts Name		Torque converter	Oil pump	O/D brake (B_0)	2nd brake (B_1)	1st and reverse brake (B_2)	O/D direct clutch (C_0)	Front clutch (C_1)	Rear clutch (C_2)	O/D one-way clutch (F_0)	No.2 one-way clutch (F_2)	ON-Vehicle matrix chart	Front planetary gear	Rear planetary gear
See Page		AT-76	★	★	★	★	★	★	★	★	★	AT-56	★	★
Does not move in any forward range								1						
Does not move in reverse range						3			2			1		
Does not move in any range		1	3				2			4			5	6
No up-shift	1st → 2nd				2						3	1		
	2nd → 3rd						2	3				1		
	3rd → O/D			2								1		
No down-shift	O/D → 3rd						2			3		1		
	3rd → 2nd					2						1		
	2nd → 1st						2				3	1		
Shift point too high or too low												1		
Harsh engagement	"N" → "R"					3			2			1		
	"N" → "D"							2			3	1		
	"N"→ "D", "N" → "R"						2			3		1		
	1st → 2nd				2							1		
	2nd → 3rd						3		2			1		
	3rd → O/D			2								1		
	1st → 2nd → 3rd → O/D							2				1		
	O/D → 3rd						2			3		1		
	3rd → 2nd				2							1		
Slip	Forward & Reverse	2	3							4		1		
	"R" range					2			1					
	1st							1			2			
	2nd							2						
	3rd							2	3					
	O/D			3				1	2					
No engine braking	1st ("L" range)					2						1		
	2nd ("2" range)						2					1		
No kick-down												1		
Poor acceleration		2					3					1		
No lock-up		2										1		

Remark ★: Refer to A442F Automatic Transmission Repair Manual. (Pub. No. RM314E)