VALVE BODY

VALVE BODY REMOVAL

1. **REMOVE TRANSMISSION AND TRANSFER UNDER COVER**

2. **CLEAN TRANSMISSION EXTERIOR**

   To prevent contamination, clean the exterior transmission.

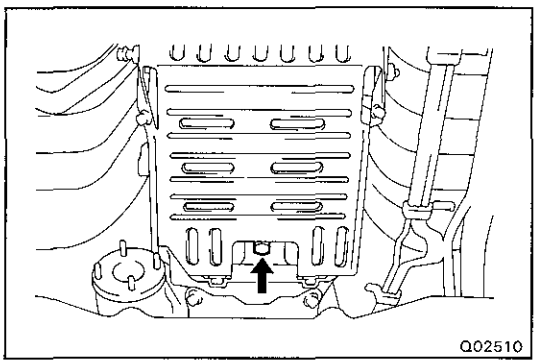

3. **DRAIN TRANSMISSION FLUID**

   Remove the drain plug and drain fluid into a suitable container.

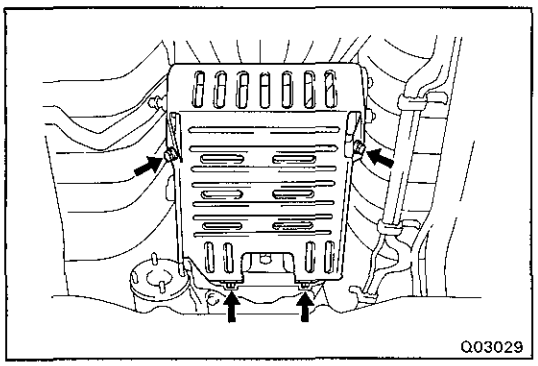

4. **REMOVE OIL PAN PROTECTOR**

   Remove the four bolts and the oil pan protector.

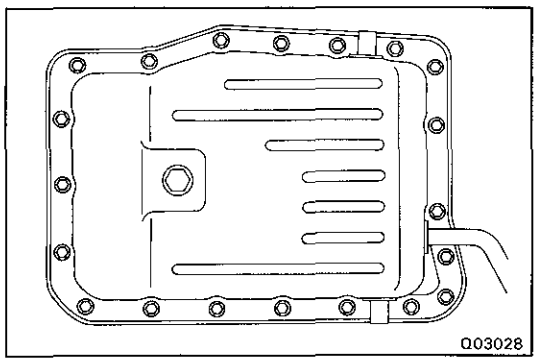

5. **REMOVE OIL PAN AND GASKET**

   NOTICE: Some fluid will remain in the oil pan. Be careful not to damage the filler tube.

(a) Remove the twenty bolts.

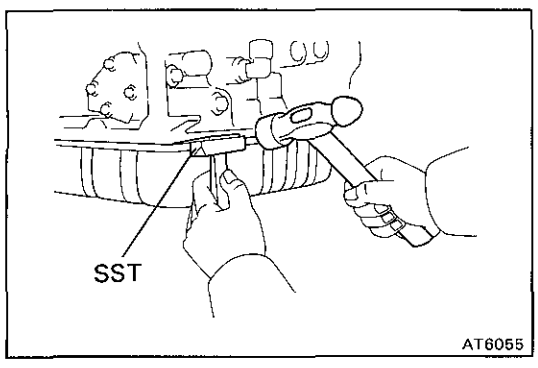

(b) Install the blade off SST between the transmission and oil pan, cut-off applied sealer.

SST 09302-00100

NOTICE: Be careful not to damage the oil pan flange.

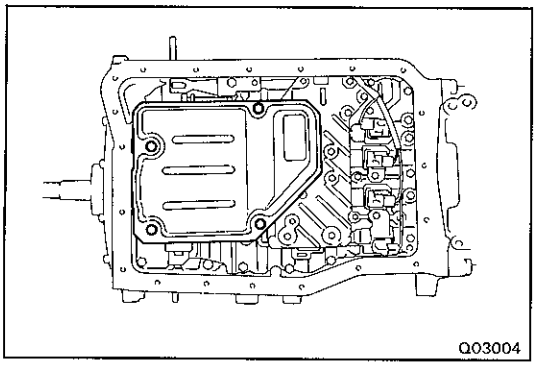

6. REMOVE OIL STRAINER

Remove the four bolts and oil strainer.

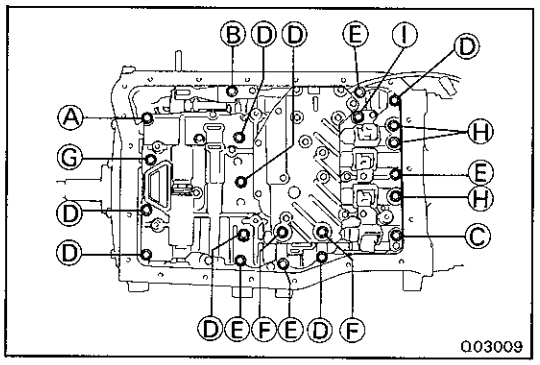

7. REMOVE VALVE BODY

(a) Remove the twenty-one bolts.

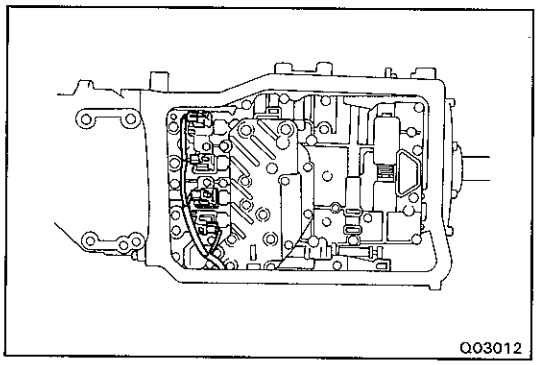

(b) Disconnect the four connectors from the solenoids.

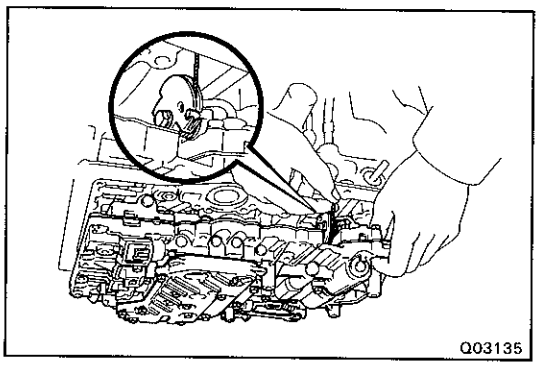

(c) Remove the throttle cable the cam and remove the valve body.

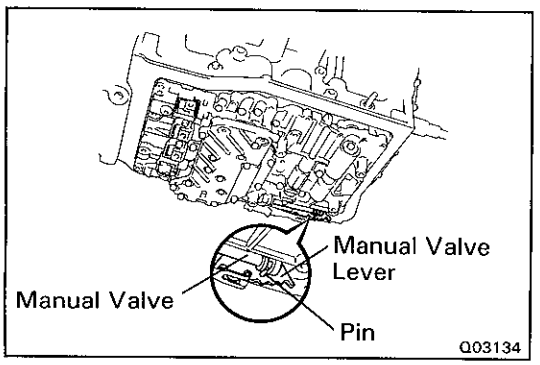

VALVE BODY INSSTALLATION

1. INSTALL VALVE BODY

(a) Align the groove of the manual valve with the pin of the manual valve lever.

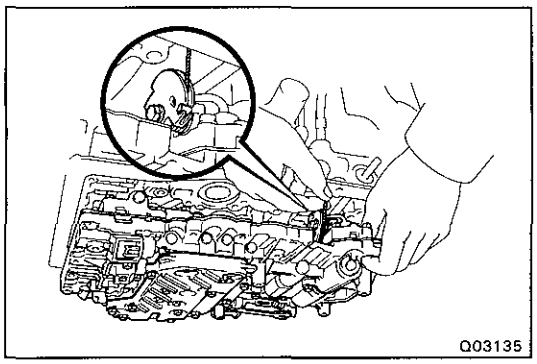

(b) Connect the throttle cable to the cam.

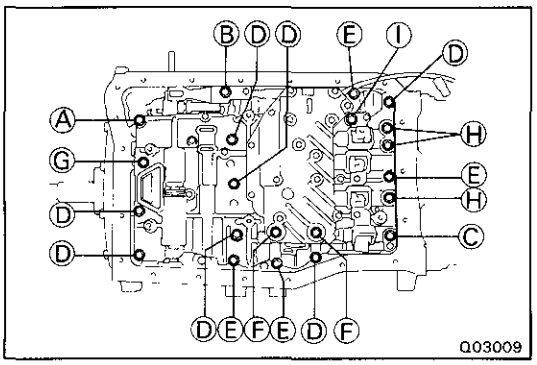

(c) Install the other bolts.

HINT: Each bolt length is indicated below.

Bolt length:
A 41 mm (1.61 in.)
B 45 mm (1.77 in.)
C 22 mm (0.87 in.)
D 32 mm (1.26 in.)
E 28 mm (1.10 in.)
F 52 mm (2.05 in.)
G 40 mm (1.57 in.)
H 22 mm (0.87 in.)
I 42 mm (1.65 in.)

(d) Check that the manual valve lever contacts the center of the roller at the tip of the detente spring.

(e) Tighten the bolts.

Torque: 10 N·m (100 kgf·cm, 7 ft·lbf)

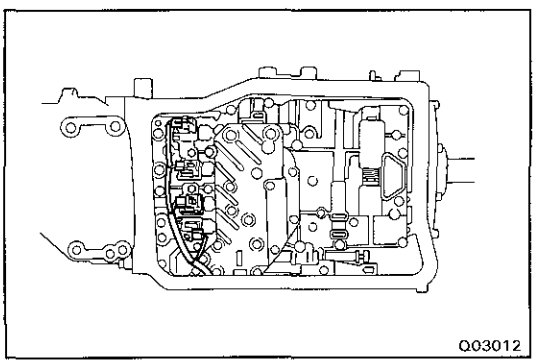

2. CONNECT FOUR SOLENOID CONNECTORS

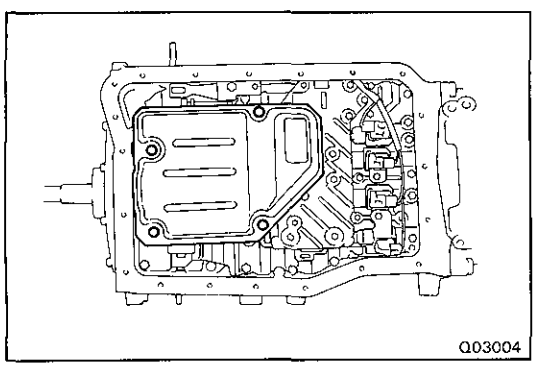

3. INSTALL OIL STRAINER

Install a new gasket and the oil strainer with the four bolts.

Torque: 10 N·m (100 kgf·cm, 7 ft·lbf)

Bolt length:
16 mm (0.63 in.)

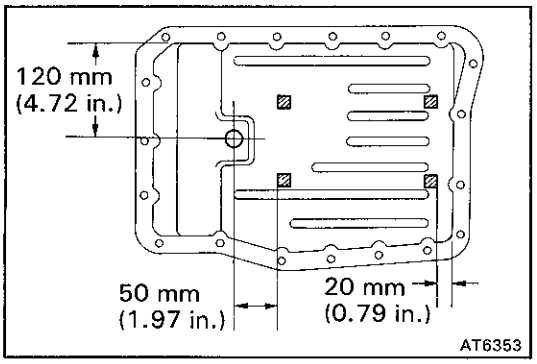

4. INSTALL MAGNETS IN PAN

Install the two magnets in the oil pan as shown in the illustration.

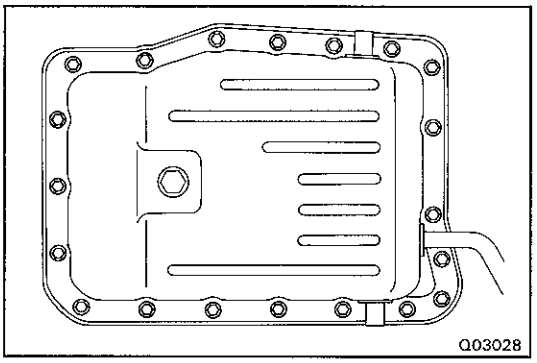

5. INSTALL OIL PAN

(a) Remove any packing material and be careful not to drop oil on the contacting surface of the transmission case and oil pan.

(b) Apply seal packing to the oil pan.

Seal packing:
Part No. 08826-00090, THREE BOND 1281B or equivalent

(c) Install and tighten the twenty bolts.

Torque: 6.9 N·m (70 kgf·cm, 61 in.·lbf)

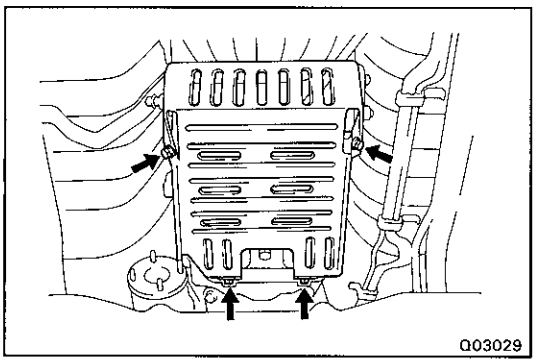

6. INSTALL OIL PAN PROTECTOR

Install the protector with the four bolts.

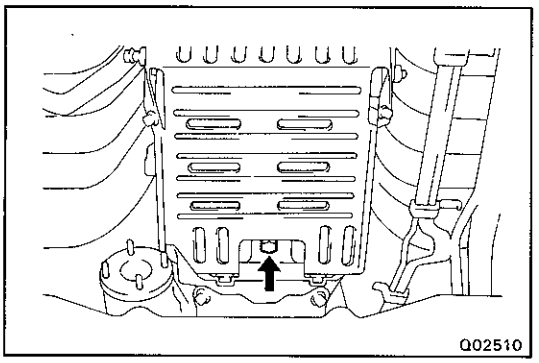

7. INSTALL DRAIN PLUG

(a) Install the drain plug with a new gasket.

(b) Torque the drain plug.

Torque: 27 N·m (280 kgf·cm, 20 ft·lbf)

8. INSTALL TRANSMISSION UNDER COVER AND TRANSFER UNDER COVER

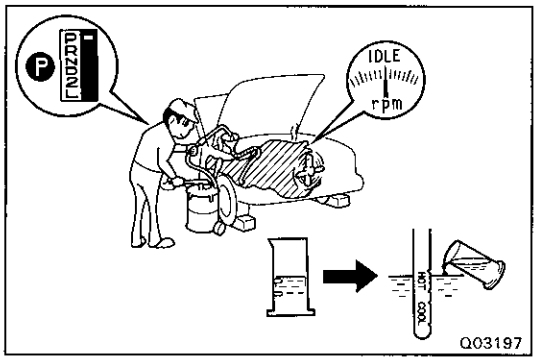

9. **FILL TRANSMISSION WITH ATF**

Capacity:
6.0 liters (6.3 US qts, 5.3 Imp.qts)

NOTICE: Do not overfill.

Fluid type:
ATF DEXRON® II

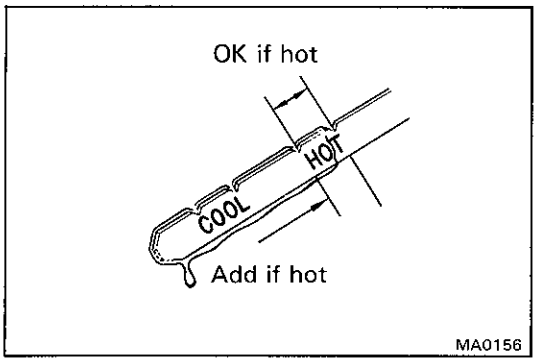

10. **CHECK FLUID LEVEL**
(See page AT-25)