THROTTLE CABLE

THROTTLE CABLE REMOVAL

1. **REMOVE FRONT PROPELLER SHAFT**
(See Pub No. RM184E, page PR-3)

2. **DISCONNECT THROTTLE CABLE**

(a) Disconnect the cable housing from the bracket.

(b) Disconnect the cable from the throttle linkage.

(c) Disconnect the cable from the torque converter housing.

3. **REMOVE VALVE BODY**
(See page AT-58)

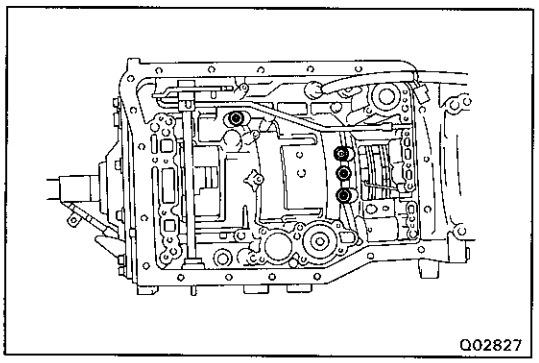

4. **REMOVE FOUR CENTER SUPPORT APPLY GASKETS**

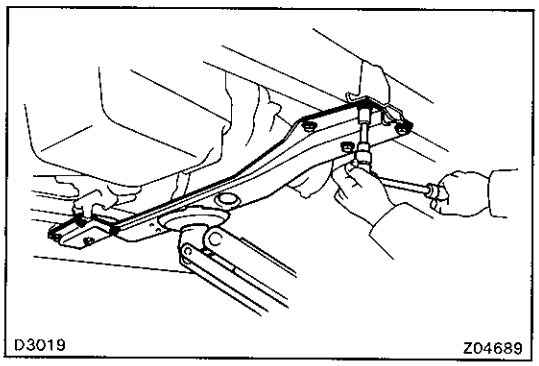

5. **REMOVE FRAME CROSSMEMBER SET BOLTS**

(a) Support the frame crossmember with a jack.

(b) Remove the eight set bolts.

6. **REMOVE THROTTLE CABLE CLAMP**

(a) Lower the jack.

(b) Remove the cable clamp from the transmission housing.

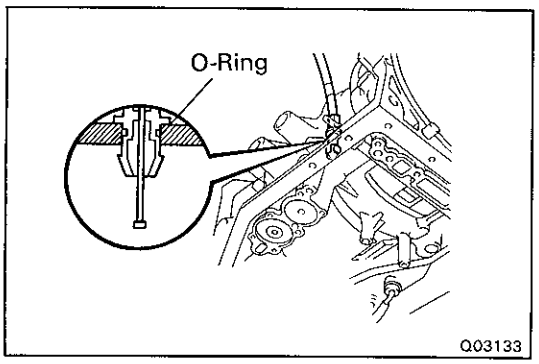

7. **REMOVE THROTTLE CABLE**

Using 10 mm socket driver, remove the throttle cable by pushing the retainer portion of the throttle cable.

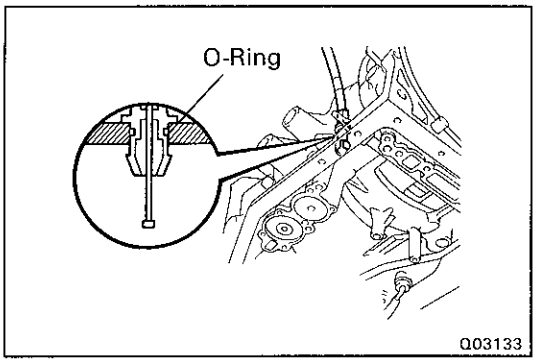

THROTTLE CABLE INSTALLATION

1. INSTALL CABLE IN TRANSMISSION CASE

(a) Coat a new O-ring with ATF, and install it to the cable.

(b) Install the cable to the transmission case.

2. INSTALL THROTTLE CABLE CLAMP TO TRANSMISSION HOUSING

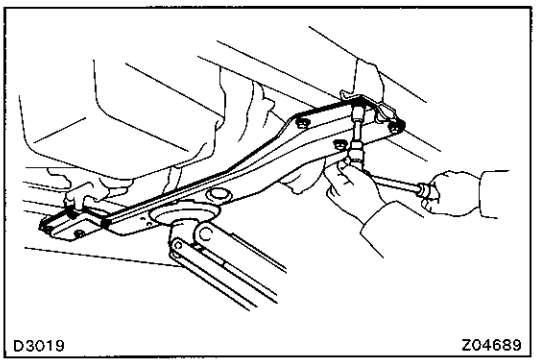

3. INSTALL FRAME CROSSMEMBER SET BOLTS

Torque: 61 N·m (620 kgf·cm, 45 ft·lbf)

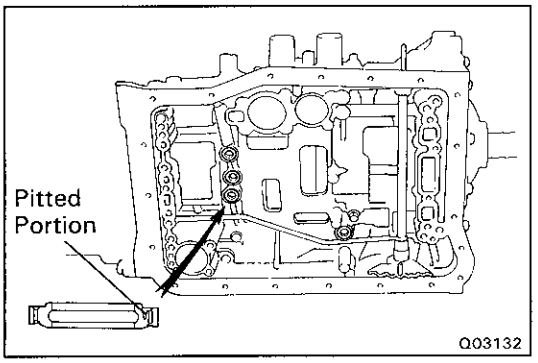

4. INSTALL FOUR CENTER SUPPORT APPLY GASKET

Install new four gaskets, facing the pitted side toward the transmission case.

5. INSTALL VALVE BODY
(See page AT-59)

6. INSTALL FRONT PROPELLER SHAFT
(See Pub No. RM184E, page PR-8)

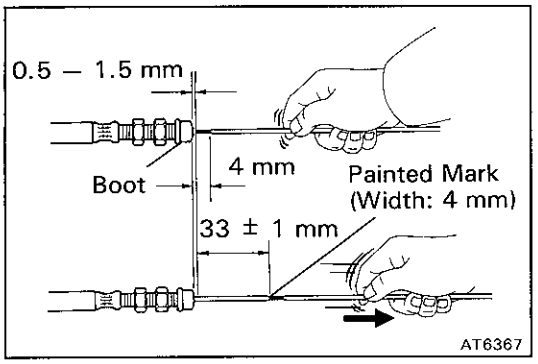

7. IF THROTTLE CABLE IS NEW, PAINT MARK ON INNER CABLE

HINT: New cable do not have a cable stopper installed. Therefore to mark adjustment possible, paint a mark as described below.

(a) Connect the throttle cable to the throttle cam of valve body.

(b) Pull the inner cable lightly until resistance is felt, and hold it.

(c) Paint a mark as shown, about 4 mm (0.16 in.) in width.

(d) Pull the inner cable fully, measure the cable stroke.

Cable stroke:
33 ± 1 mm (1.30 ± 0.04 in.)

8. CONNECT THROTTLE CABLE

(a) Connect the cable to the throttle linkage.

(b) Connect the cable housing to the bracket on the valve cover.

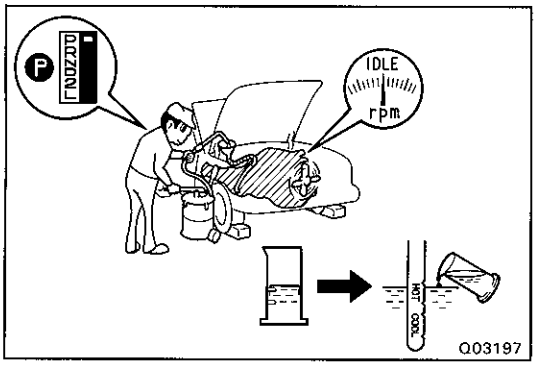

9. **ADJUST THROTTLE CABLE**
(See page AT-26)

10. **FILL TRANSMISSION WITH ATF**

Capacity:
6.0 liters (6.3 US qts, 5.3 Imp.qts)

NOTICE: Do not overfill.

Fluid type:
ATF DEXRON® II

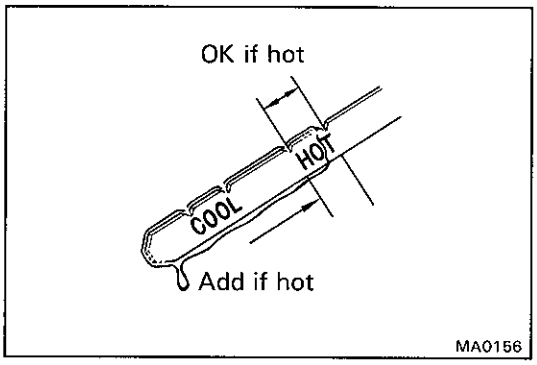

11. **CHECK FLUID LEVEL**
(See page AT-25)