ASSEMBLY REMOVEAL AND INSTALLATION

COMPONENTS

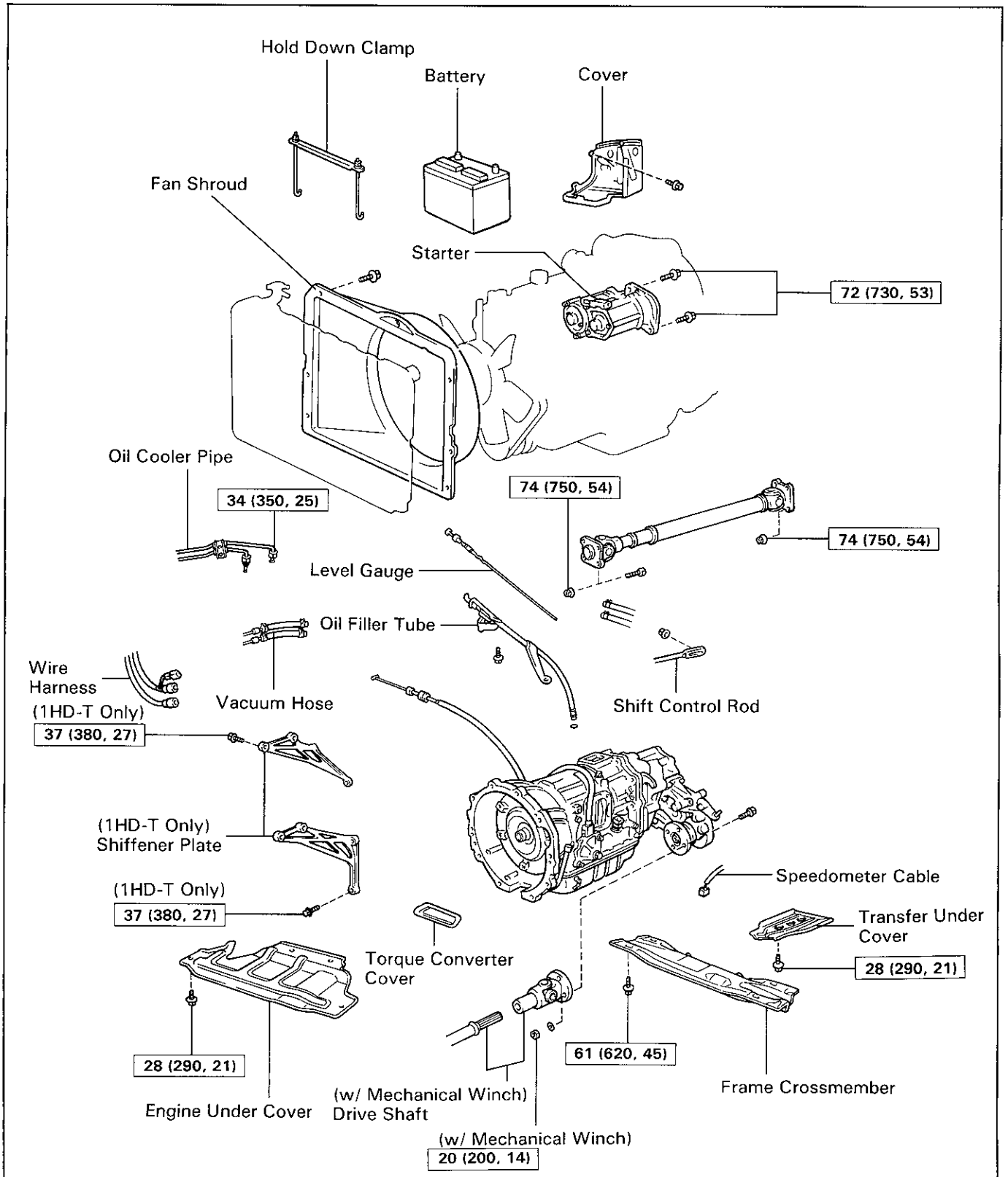

N·m (kgf·cm, ft·lbf) : Specified torque

◆ Non-reusable part

Q03192

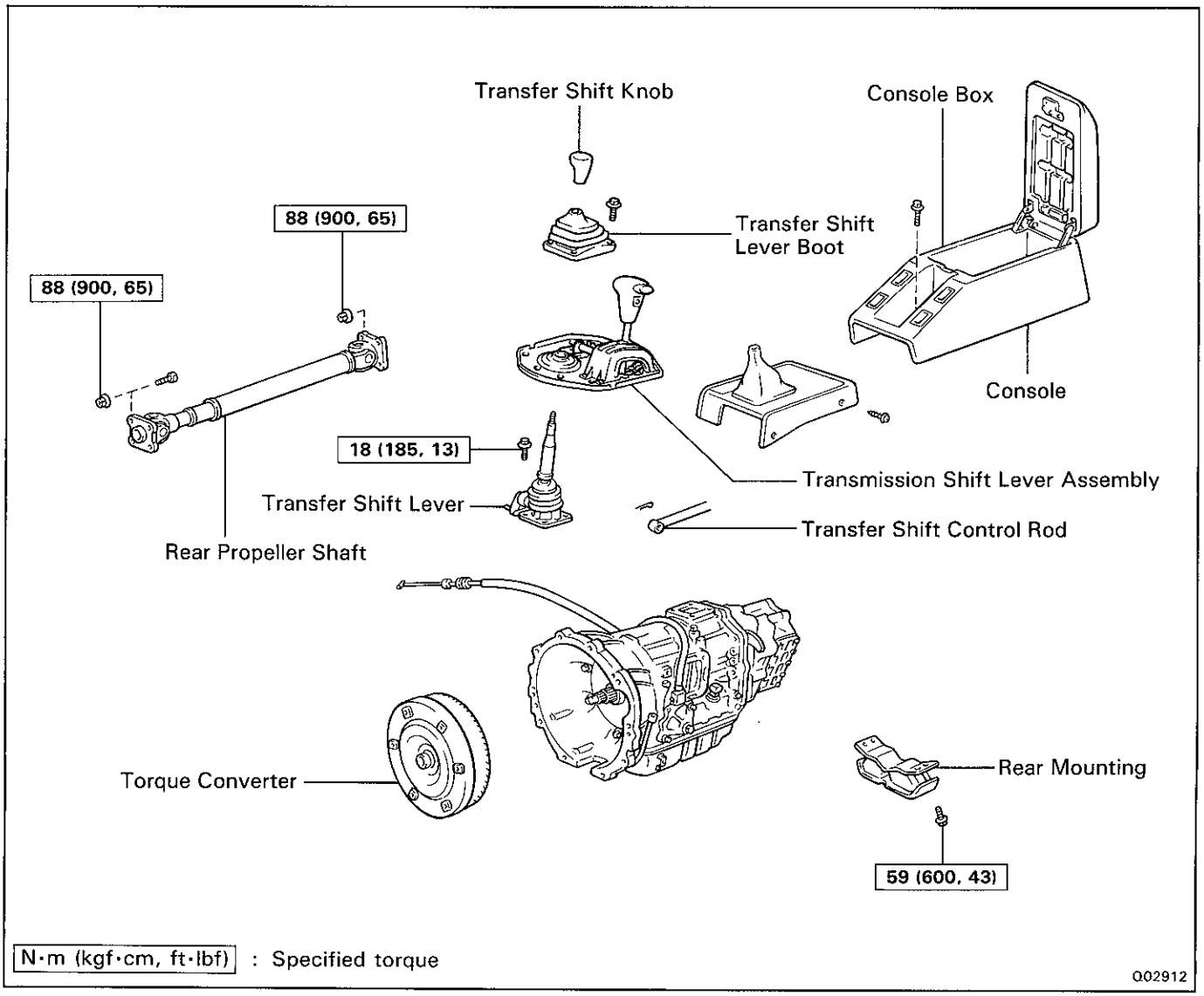

TRANSMISSION REMOVAL

1. **DISCONNECT BATTERY CABLE FROM NEGATIVE TERMINAL**

2. **REMOVE BATTERY AND COVER**

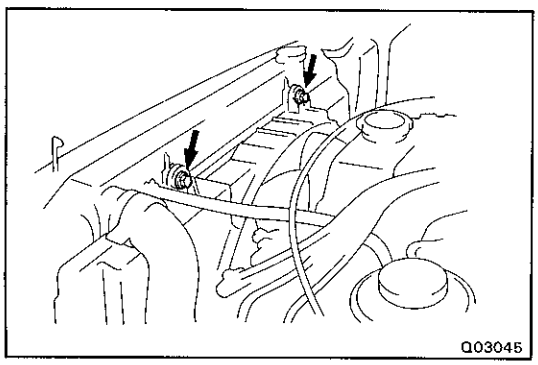

3. **LOOSEN FAN SHROUD OF COOLING FAN TO AVOID DAMAGE TO FAN**

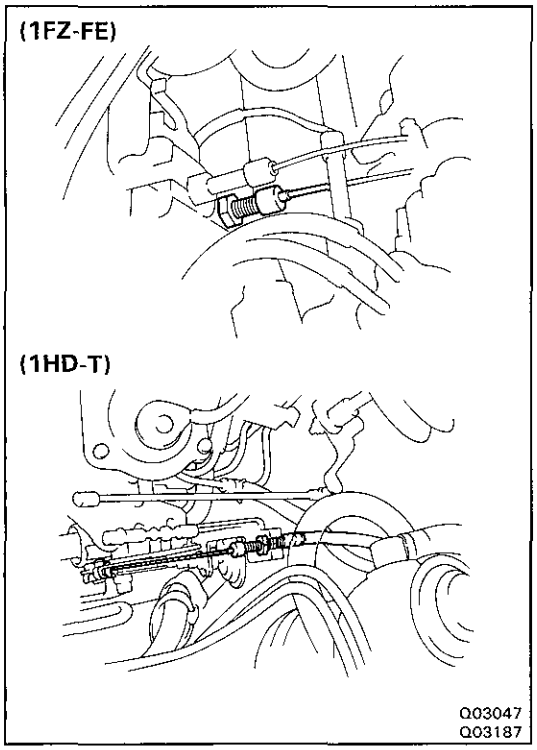

4. DISCONNECT THROTTLE CABLE

(a) Loosen the adjusting nut and disconnect the cable housing from the bracket.

(b) Disconnect the cable from the linkage.

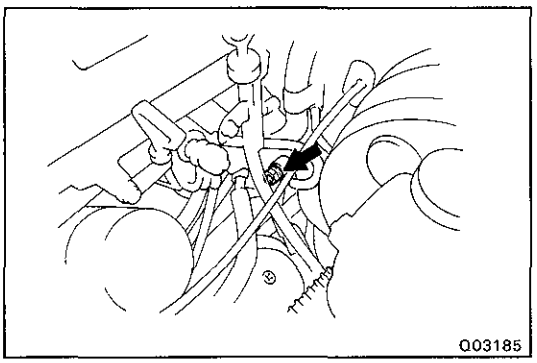

5. *(1HD-T)*
REMOVE STARTER MOUNTING BOLT

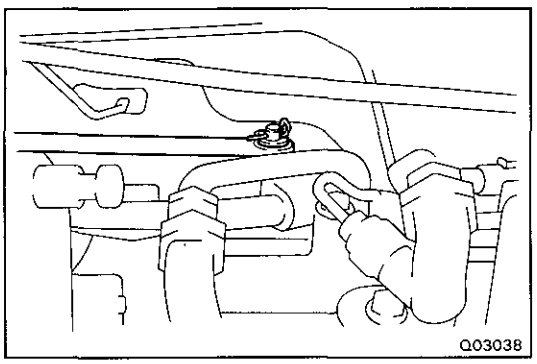

6. REMOVE TRANSMISSION SELECT LEVER AND TRANSFER SHIFT LEVER

(a) Remove the clip, washer and wave washer, and disconnect the link.

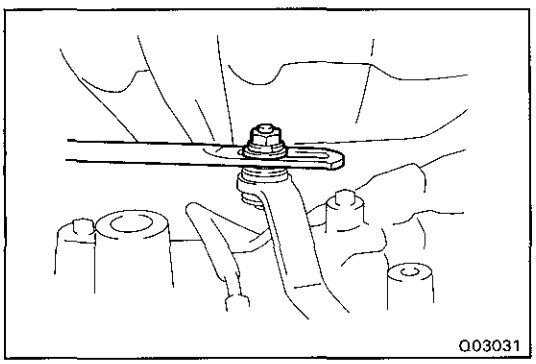

(b) Remove the nut and washer, disconnect the link.

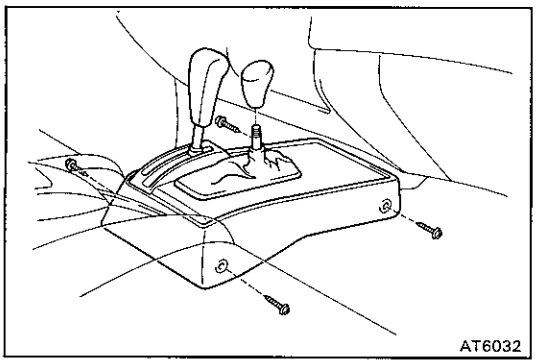

(c) Remove the transfer shift lever knob.

(d) Remove the four screws and the console.

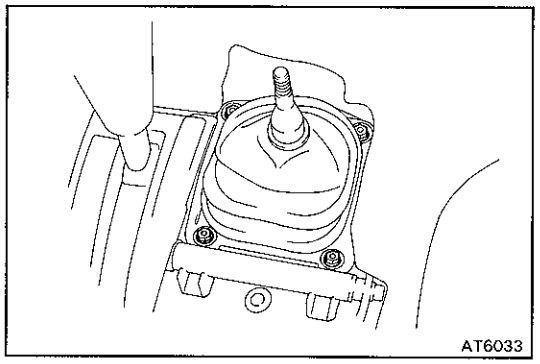

(e) Remove the four bolts and transfer shift lever bolt.

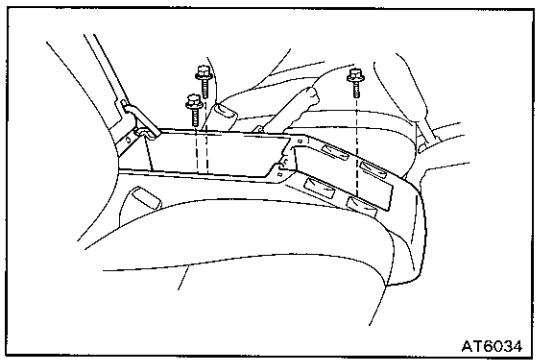

(f) Remove the three bolts and the console box.

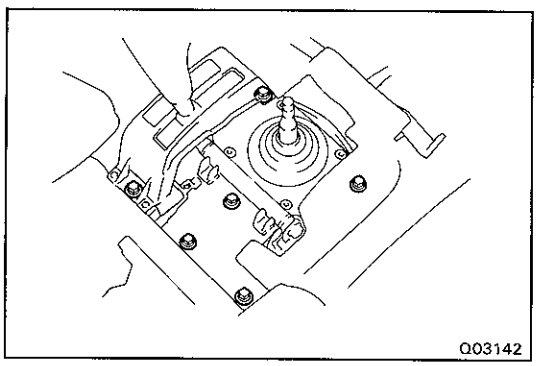

(g) Remove the six bolts and the transmission shift lever assembly.

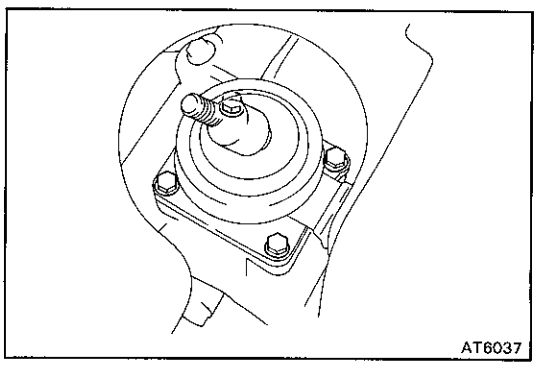

(h) Remove the four screws and the transfer shift lever.

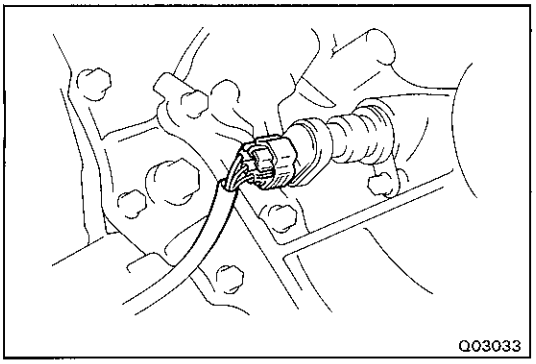
Q03033

7. REMOVE NO.1 SPEED SENSOR CONNECTOR

8. REMOVE FRONT AND REAR PROPELLER SHAFTS
(See Pub. No. RM184E, page PR-3)

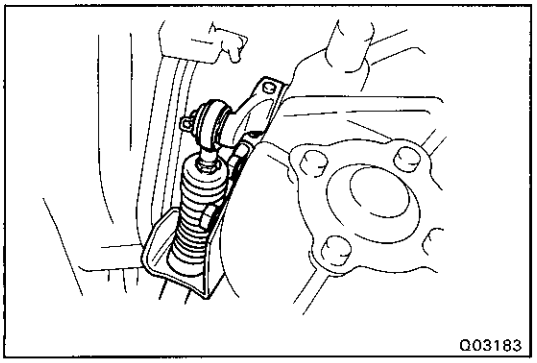
Q03183

9. (w/ MECHAICAL WINCH)
REMOVE POWER TAKE OF SHIFT CABLE

(a) Pull out the pin and disconnect the cable.

(b) Remove the two bolts and the cable bracket.

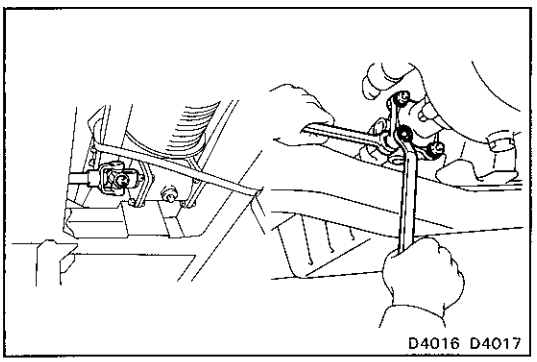
D4016 D4017

(c) Remove the engine under cover.

(d) Place matchmarks on the yoke and flange.

(e) Remove the bolts and nuts, disconnect the drive shaft from the PTO.

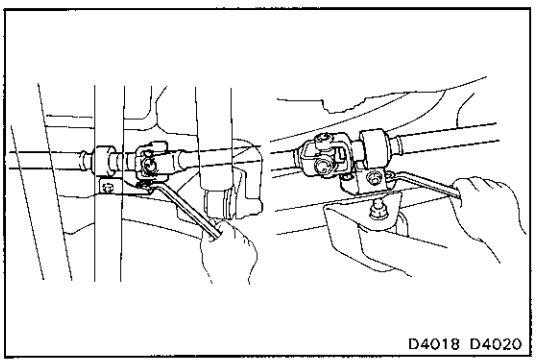
D4018 D4020

(f) Remove the front and rear bracket set bolts, and then remove the drive shaft.

(1FZ-FE)

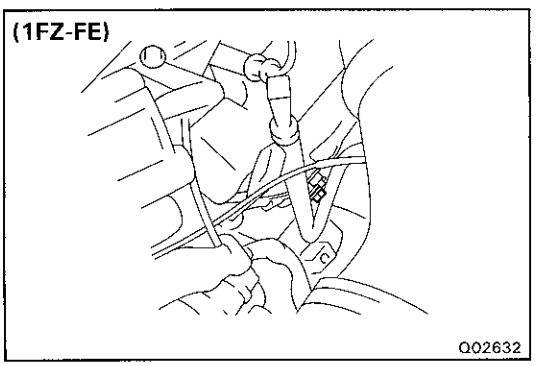
Q02632

10. REMOVE OIL FILLER TUBE

(a) Remove the level gauge.

(b) Remove the bolt.

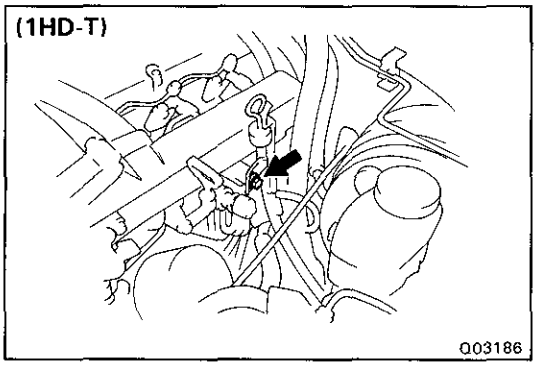



(c) Remove the bolt and the filler tube.

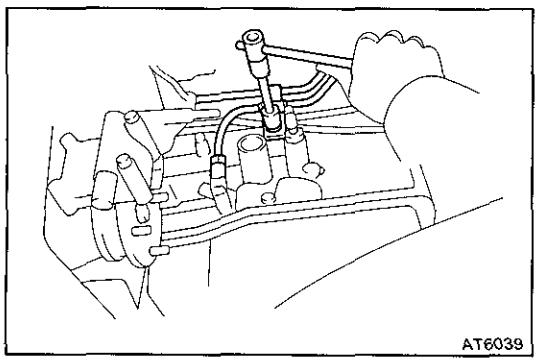

11. DISCONNECT TWO OIL COOLER TUBES

(a) Remove the bolt and clamp.

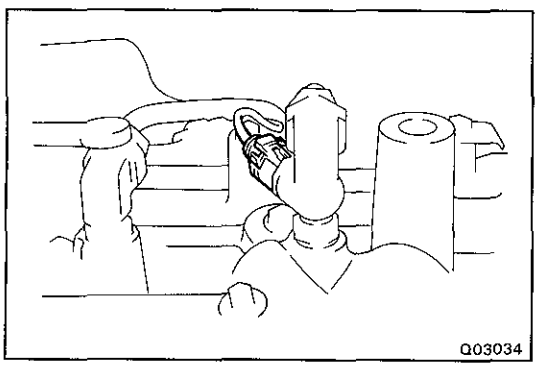

(b) Disconnect the temperature sensor connector.

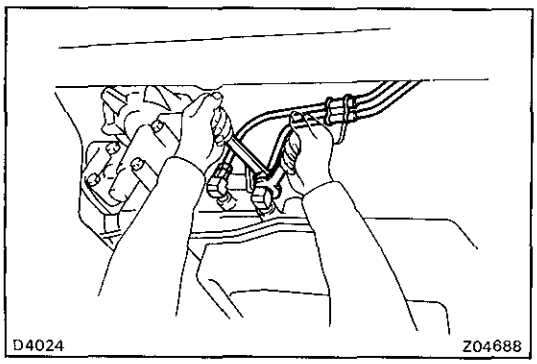

(c) Disconnect the two oil cooler tubes.

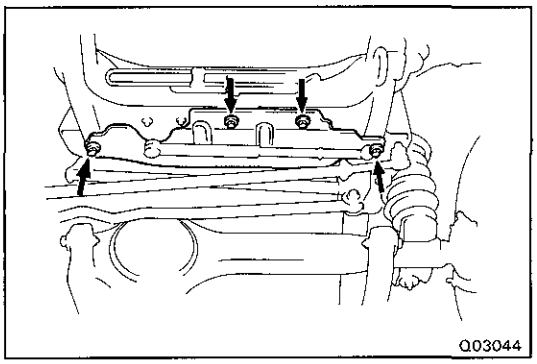

12. REMOVE ENGINE UNDER COVER

Remove the four bolts and the cover.

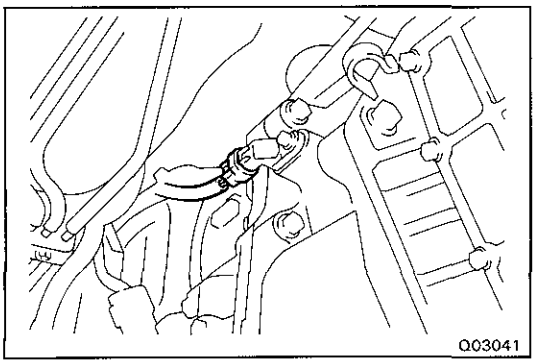

13. DISCONNECT NO.2 SPEED SENSOR CONNECTOR

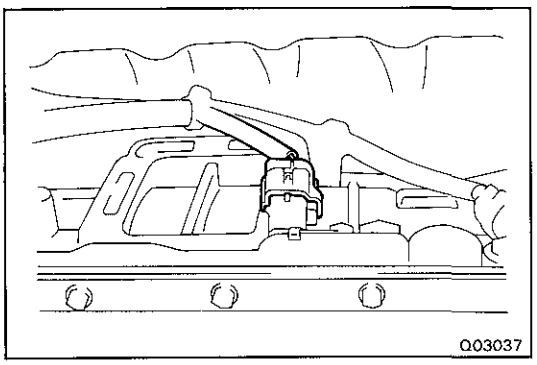

14. DISCONNECT SOLENOID CONNECTOR

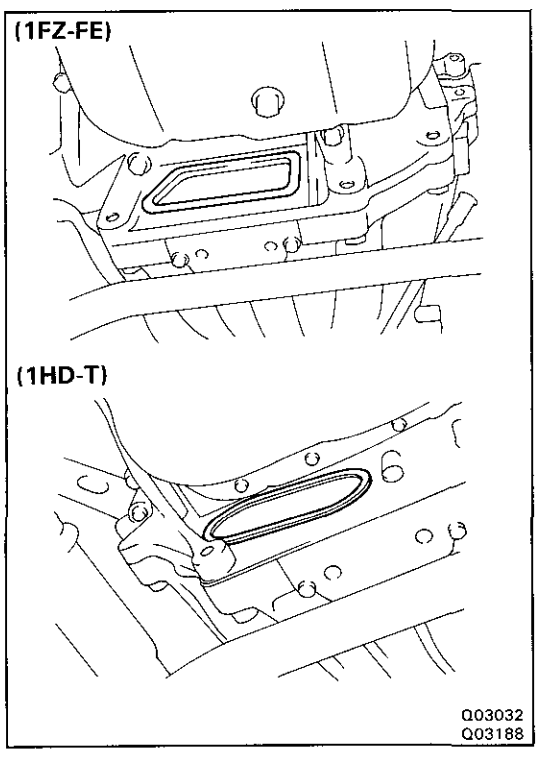

15. REMOVE SIX TORQUE CONVERTER MOUNTING BOLTS

(a) Remove the converter hole plug.

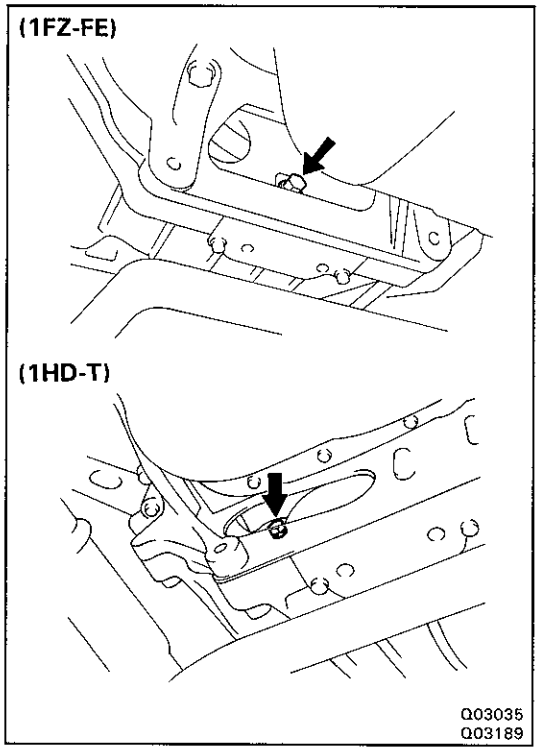

(b) Turn the crankshaft to gain access to each bolt. Remove the six bolt.

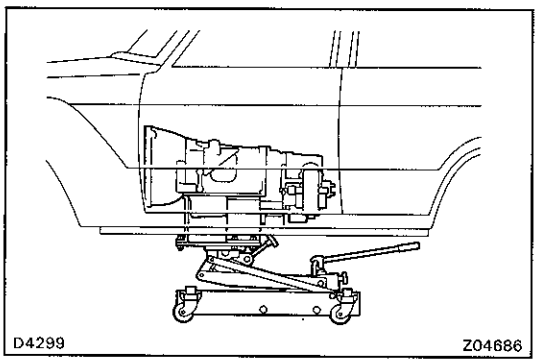

16. REMOVE CROSSMEMBER

(a) Support the transmission with the transmission jack.

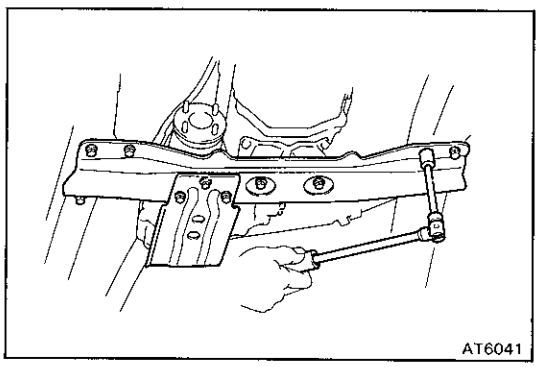

(b) Remove the eight bolts and then remove the frame crossmember.

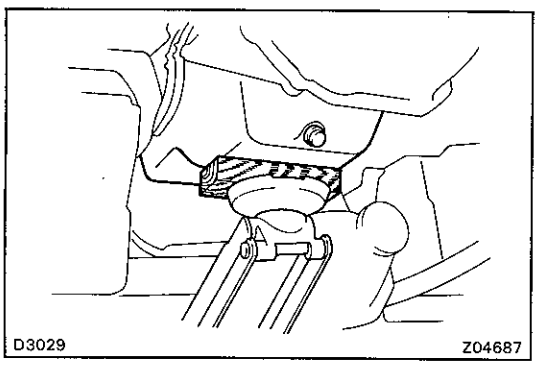

17. REMOVE TRANSMISSION ASSEMBLY

(a) Be sure to out a wooden block or equivalent between the jack and oil pan to prevent damage. Support the oil pan with a jack.

(b) Lower the rear end of transmission.

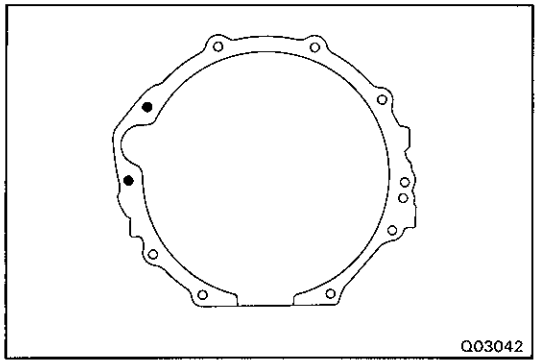

(c) (1FZ-FE)
Remove the nut and disconnect the connectors from the starter.

(d) (1FZ-FE)
Remove the two bolts and the starter.

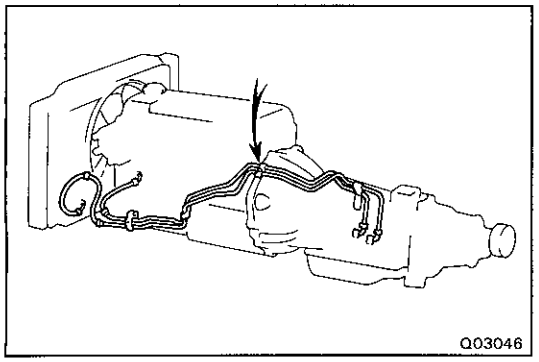

(e) Disconnect the neutral start switch connectors.

(f) Remove the bolt and disconnect the oil cooler tube clamp from the converter housing.

(g) Disconnect the connectors from the transfer.

(h) Remove the clamp and disconnect the wire harness from the transmission and transfer.

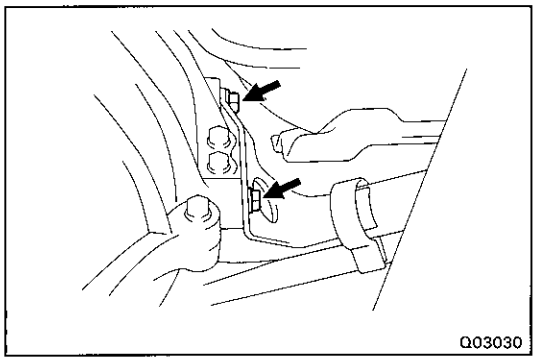

(i) Remove the two bolts and disconnect the exhaust pipe bracket from the converter housing.

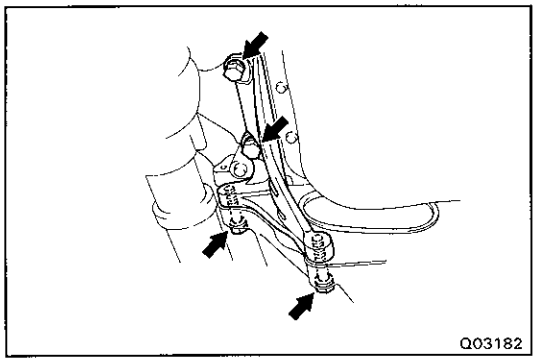

(j) (1HD-T)
Remove the four bolts and the stiffener plate.

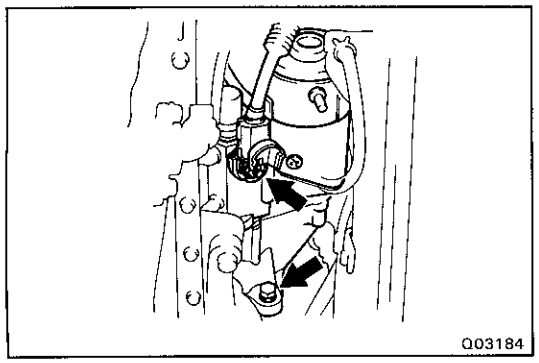

(k) (1HD-T)
Remove the nut and disconnect the connectors from the starter.

(l) (1HD-T)
Remove the nut and the starter.

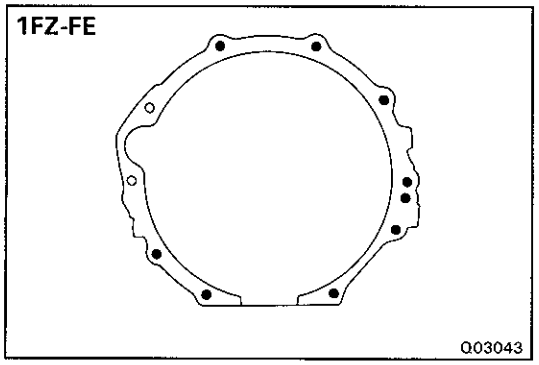

(m) Remove the bolts and the transmission.

TORQUE CONVERTER CLEANING

If the transmission is contaminated, the torque converter and transmission cooler should be thoroughly flashed with ATF.

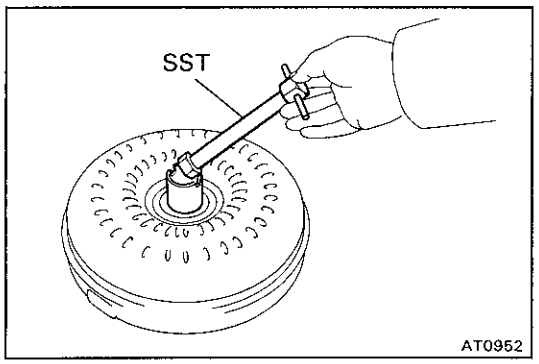

TORQUE CONVERTER AND DRIVE PLATE INSPECTION

1. INSPECT ONE-WAY CLUTCH

(a) Install SST in the inner race of one-way clutch.

SST 09350-30020 (09351-32010)

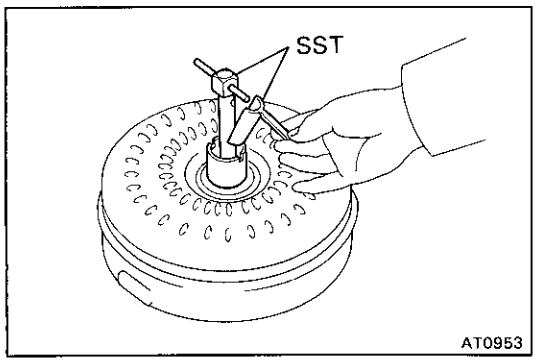

(b) Install SST so that it fits in the notch of the converter hub and outer race of the one-way clutch.

SST 09350-30020 (09351-32010)

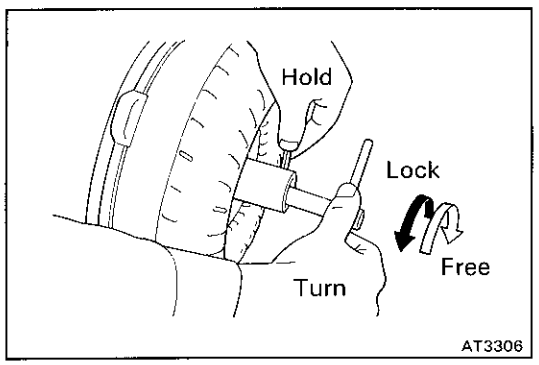

(c) With the torque converter made stand, the clutch should lock when turned counterclockwise, and rotate freely and smoothly clockwise.

If necessary, clean the converter and retest the clutch. Replace the converter if the clutch still fails the test.

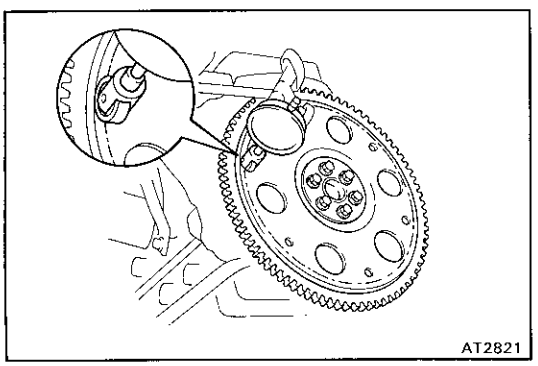

2. MEASURE DRIVE PLATE RUNOUT AND INSPECT RING GEAR

Set up a dial indicator and measure the drive plate runout. If runout exceeds 0.20 mm (0.0079 in.) or if the ring gear is damaged, replace the drive plate. If installing a new drive plate, note the orientation of spacers and tighten the bolts.

Torque: 83 N·m (850 kgf·cm, 61 ft·lbf)

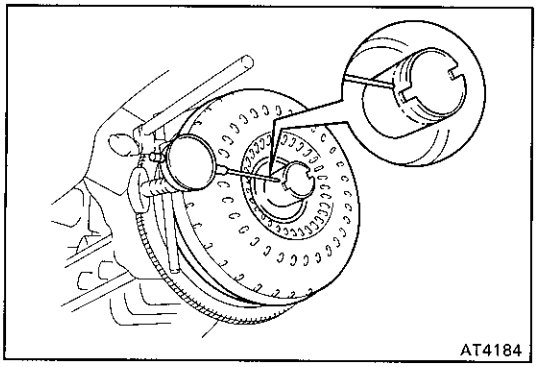

3. MEASURE TORQUE CONVERTER SLEEVE RUNOUT

(a) Temporarily mount the torque converter to the drive plate. Set up a dial indicator.

If runout exceeds 0.30 mm (0.0118 in.), try to correct by reorienting the installation of the converter. If excessive runout cannot be corrected, replace the torque converter.

HINT: Mark the position of the converter to ensure correct installation.

(b) Remove the torque converter.

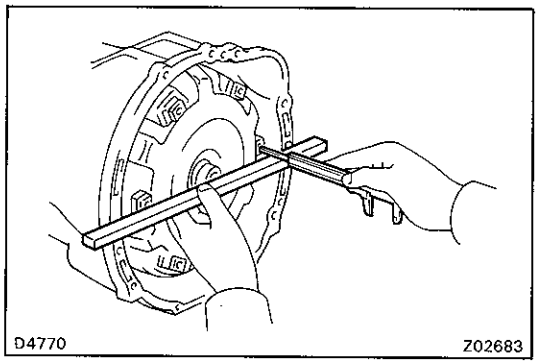

TRANSMISSION INSTALLATION

1. INSTALL TORQUE CONVERTER IN TRANSMISSION

If the torque converter clutch has been drained and washed, refill with new ATF.

Fluid type:
AFT DEXRON® II

2. CHECK TORQUE CONVERTER INSTALLATION

Using calipers and a straight edge, measure from the installed surface to the front surface of the transmission.

Correct distance:
(1FZ-FE)
More than 37.2 mm (1.465 in.)
(1HD-T)
More than 43.8 mm (1.724 in.)

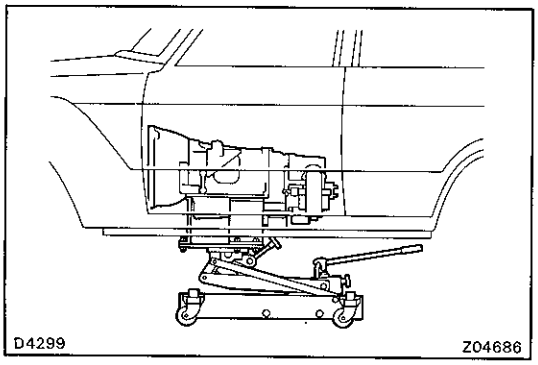

3. PLACE TRANSMISSION AT INSTALLATION POSITION

Jack up and push the transmission fully into position.

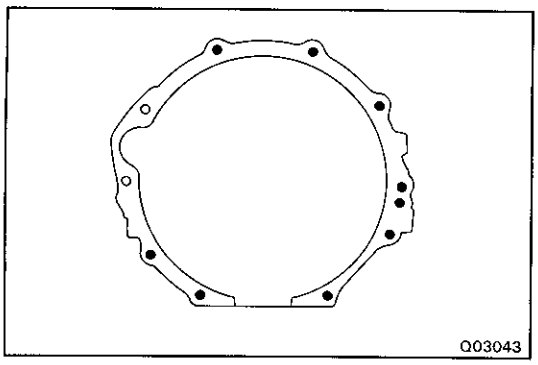

4. INSTALL TRANSMISSION BOLTS

(a) Install the transmission with the bolts.

Torque: 72 N·m (730 kgf·cm, 53 ft·lbf)

(b) Connect the wire harness to the transmission and transfer with the clamp.

(c) Connect the connectors to the transfer.

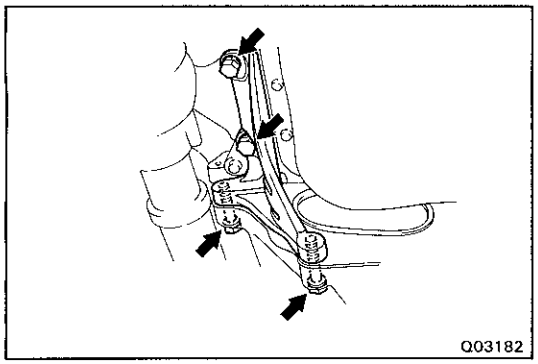

(d) (1HD-T)
Install the left and right stiffener plates with the eight bolt.

Torque: 37 N·m (380 kgf·cm, 27 ft·lbf)

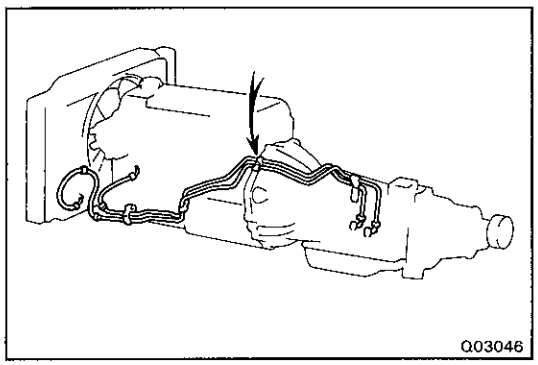

(e) Connect the oil cooler tube clamp to the converter housing with the bolt.

(f) Connect the park/neutral position switch.

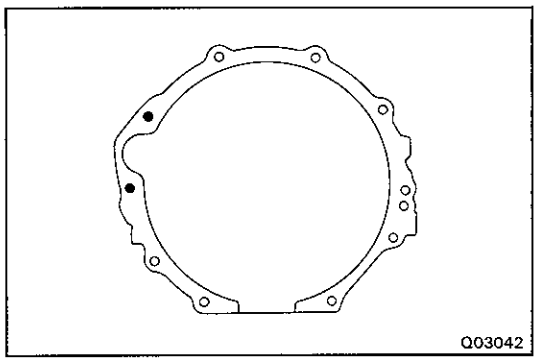

(g) (1FZ-FE)
Install the starter with the two bolts.

Torque: 72 N·m (730 kgf·cm, 53 ft·lbf)

(h) (1FZ-FE)
Connect the connectors.

(i) Install the nut.

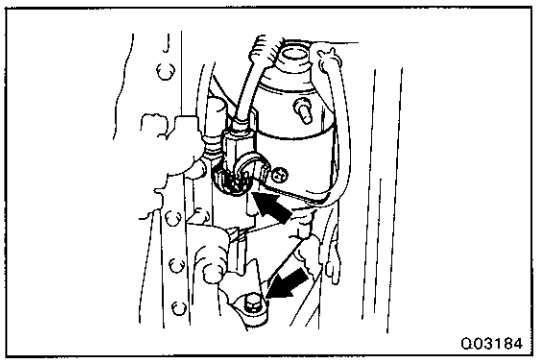

(j) (1HD-T)
Install the starter with the bolt.

Torque: 72 N·m (730 kgf·cm, 53 ft·lbf)

(k) (1HD-T)
Connect the connectors.

(l) (1HD-T)
Install the nut.

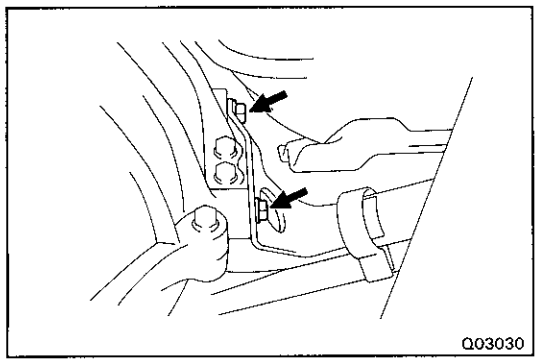

(m) Connect the exhaust pipe bracket to the converter housing with the two bolts.

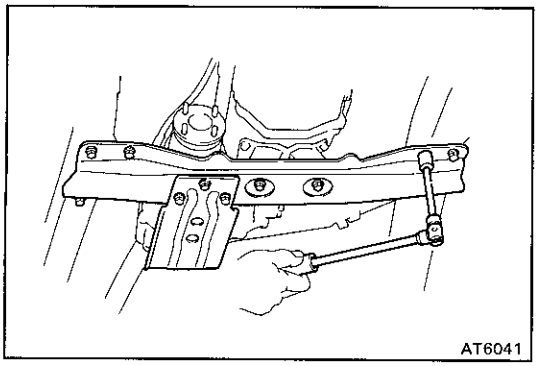

5. INSTAL CROSSMEMBER

Install the crossmember with eight bolts and two nuts.

Torque: 61 N·m (620 kgf·cm, 45 ft·lbf)

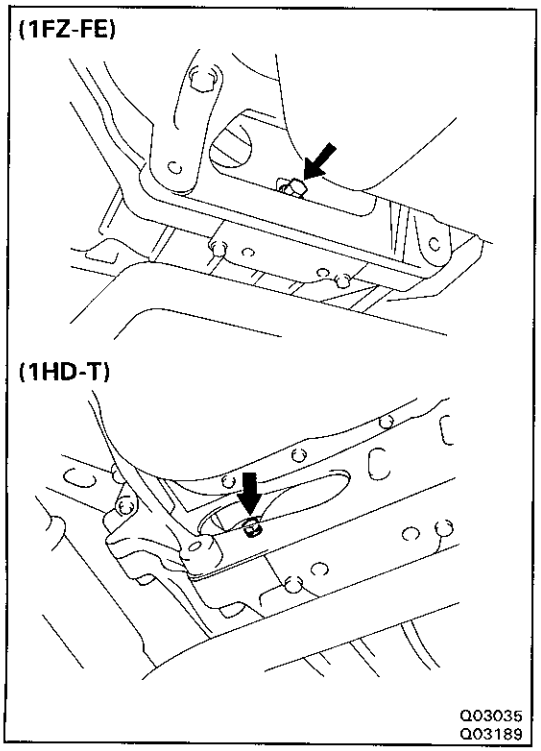

6. INSTALL TORQUE CONVERTER MOUNTING BOLTS

(a) Install the six bolts while turning the crankshaft.

Torque: 55 N·m (550 kgf·cm, 40 ft·lbf)

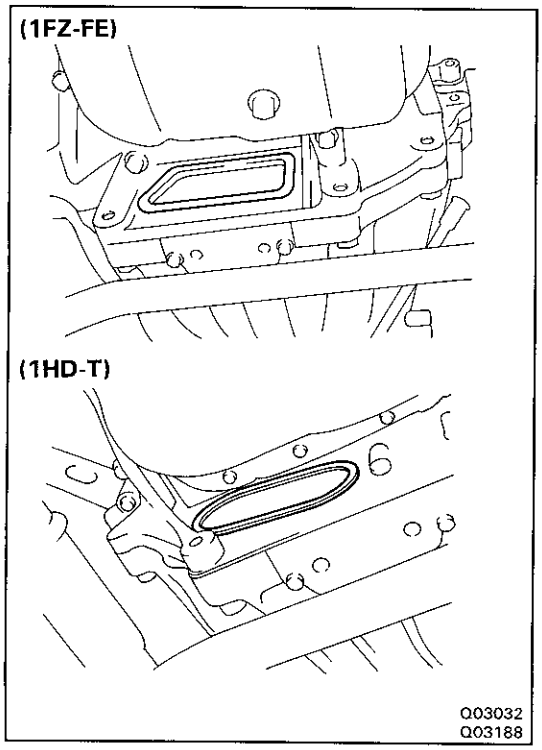

(b) Seal the converter hole plug with adhesive.

(c) Install the converter hole plug.

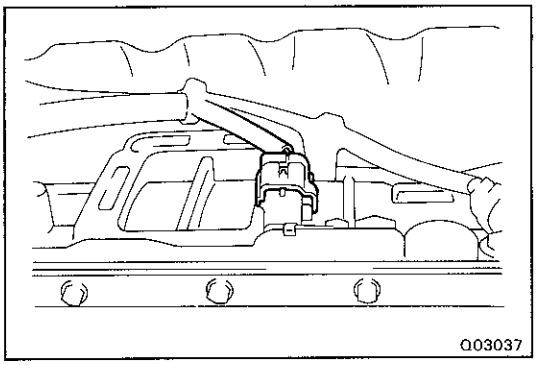

7. CONNECT SOLENOID CONNECTOR

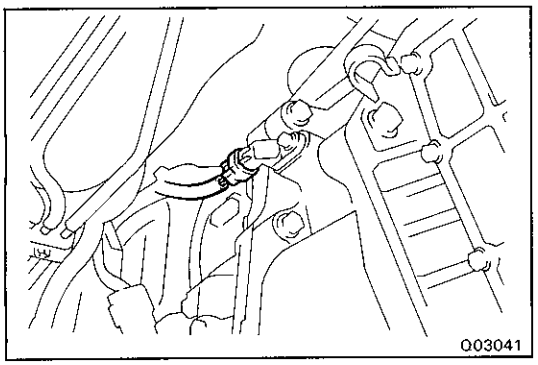

8. CONNECT NO.2 SPEED SENSOR CONNECTOR

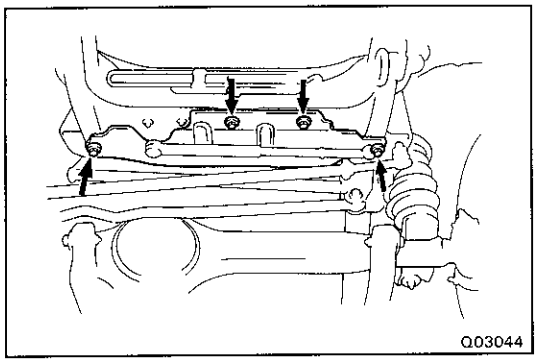

9. INSTALL ENGINE UNDER COVER

Install the cover with the four bolts.

Torque: 28 N·m (290 kgf·cm, 21 ft·lbf)

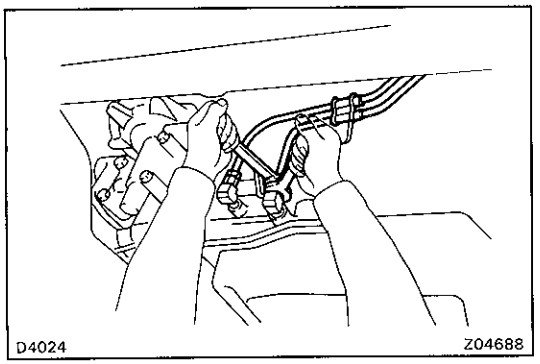

10. CONNECT TWO OIL COOLER TUBES

(a) Connect the two oil cooler tubes.

Torque: 34 N·m (350 kgf·cm, 25 ft·lbf)

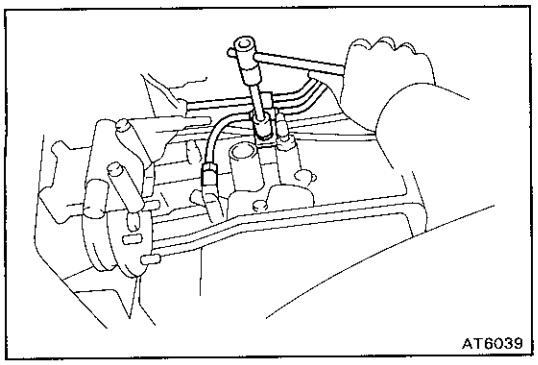

(b) Install the cooler tube clamp.

Torque: 10 N·m (100 kgf·cm, 7 ft·lbf)

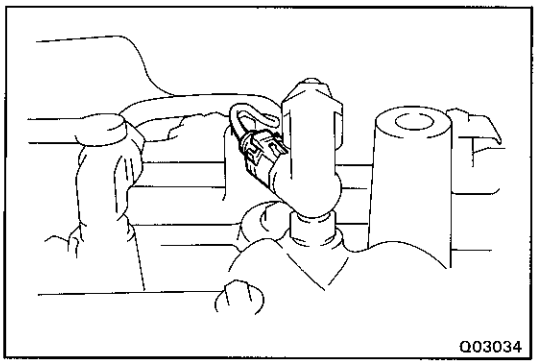

(c) Connect the oil temperature sensor connector.

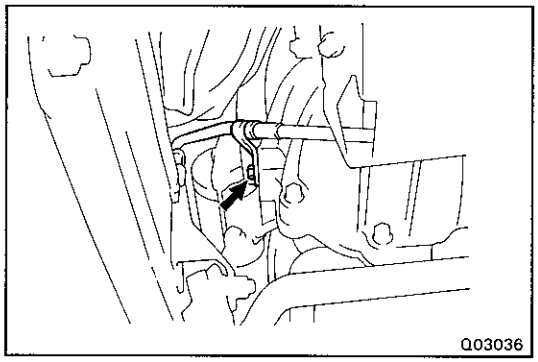

11. REMOVE OIL FILLER TUBE

(a) Install the filler tubes with the bolt.

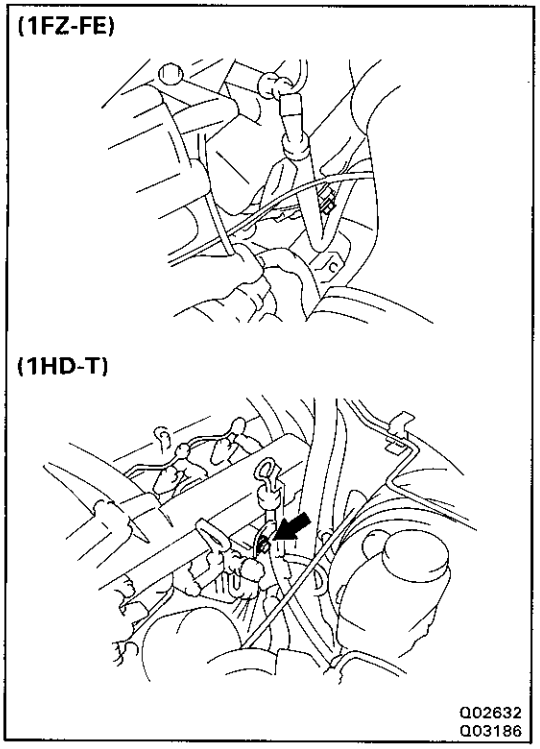

(b) Install the bolt.

(c) Install the level gauge.

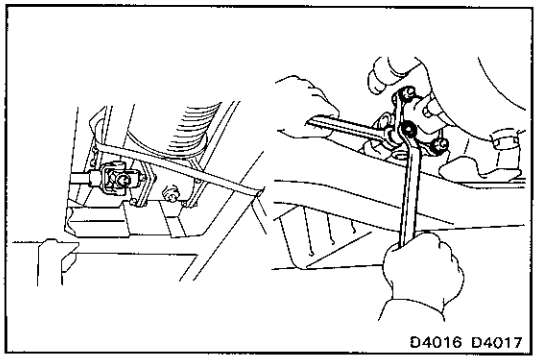

12. (w/ MECHANICAL WINCH) INSTALL POWER TAKE-OFF DRIVE SHAFT

(a) Align the matchmarks on the joint flange yoke and drive shaft.

(b) Install the drive shaft.

(c) Align the matchmarks on the drive shaft and PTO.

(d) Torque the nuts.

Torque: 20 N·m (200 kgf·cm, 14 ft·lbf)

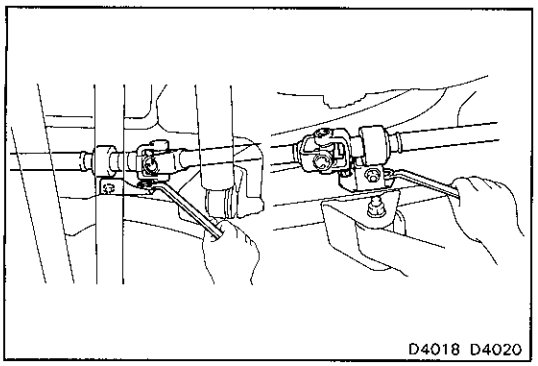

(e) Install the front and rear bracket.

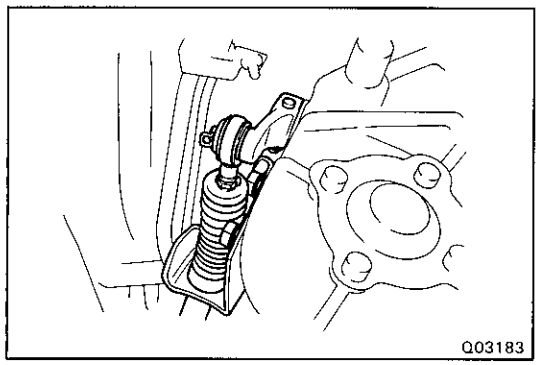

13. (w/ MECHANICAL WINCH) INSTALL POWER TAKE-OFF SHIFT CABLE

(a) Install the two bolts and the cable bracket.

(b) Connect the cable and insert the pin.

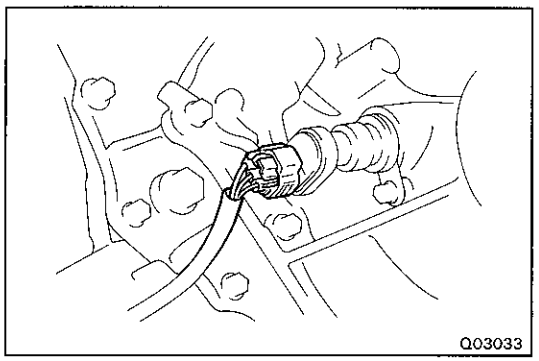

14. CONNECT NO.1 SPEED SENSOR CONNECTOR

15. INSTALL FRONT AND REAR PROPELLER SHALTS (See Pub. No. RM184E, page PR-8)

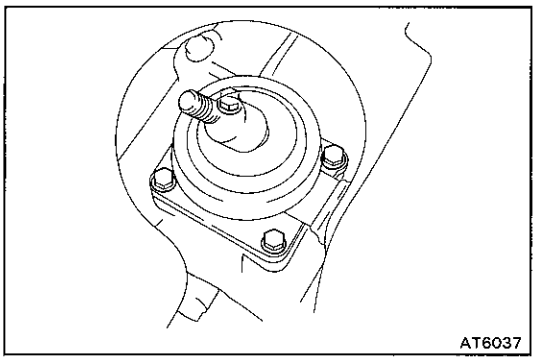

16. INSTALL TRANSMISSION SELECT LEVER AND TRANSFER SHIFT LEVER

(a) Remove the four bolts and the transfer shift lever.

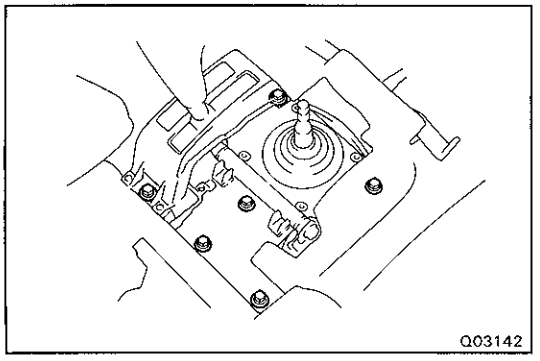

(b) Install the transmission shift lever assembly with the six bolts.

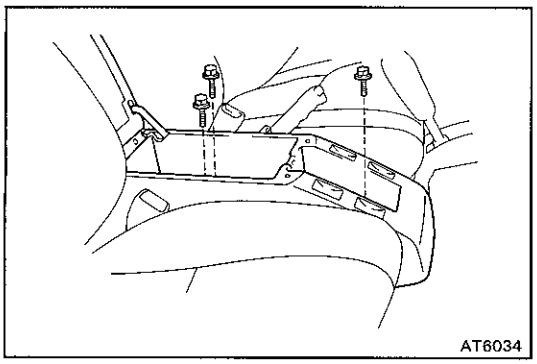

(c) Install the console box with the three bolts.

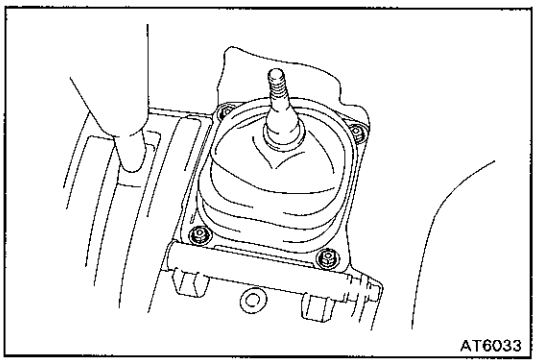

(d) Install the transfer shift lever boot with the four bolts.

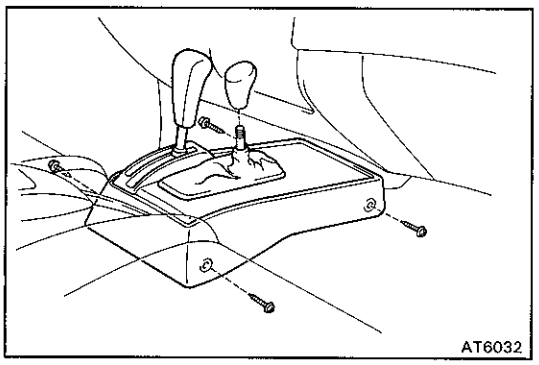

(e) Install the four screws and the console.

(f) Install the transfer shift lever knob.

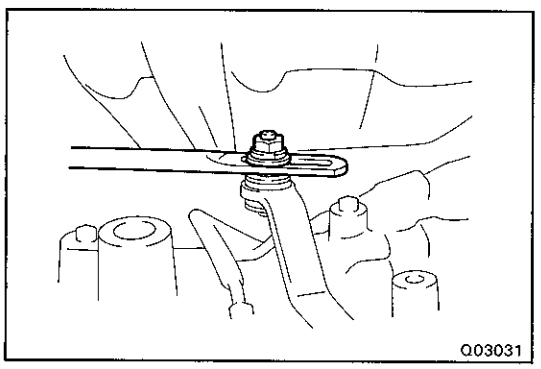

(g) Connect the link with the washer and nut.

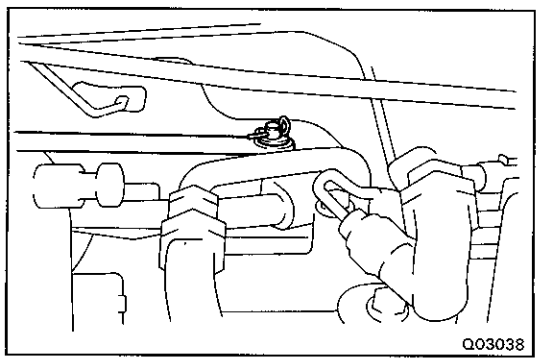

(h) Connect the link with the wave washer, washer and clip.

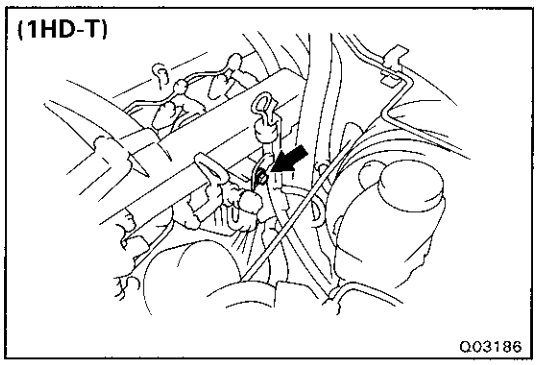

17. (1HD-T)
INSTALL STARTER MOUNT BOLT

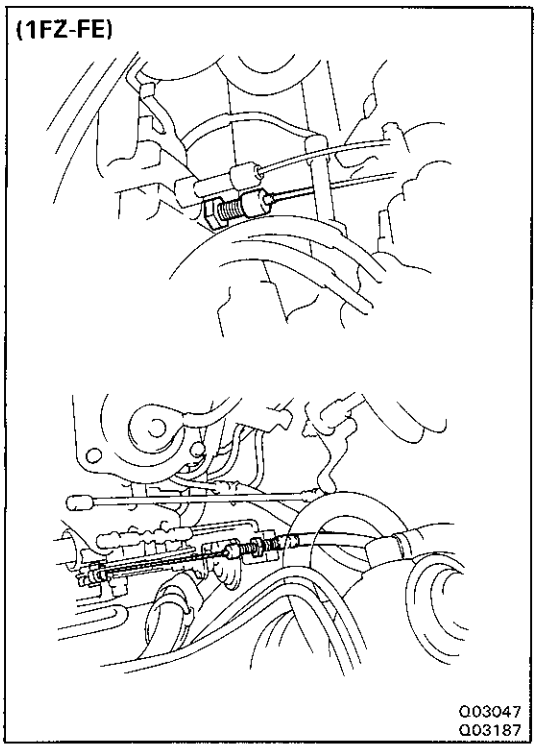

18. CONNECT THROTTLE CABLE

(a) Connect the cable from the throttle linkage.

(b) Tighten the adjusting nuts and connect the cable housing to the bracket.

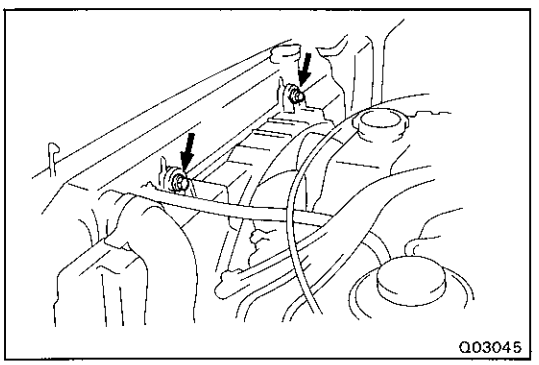

19. TIGHTEN FAN SHROUD OF COOLING FAN TO AVOID DAMAGE TO FAN

20. INSTALL BATTERY AND COVER

21. CONNECT BATTERY CABLE FROM NEGATIVE TERMINAL

22. ADJUST SHIFT CONTROL ROD
(See page AT-26)

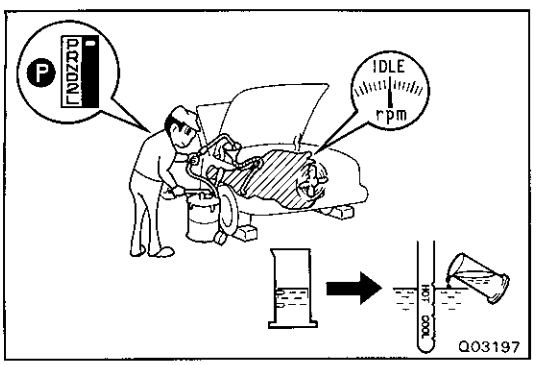

23. FILL SHIFT CONTROL ROD

Fluid type:
ATF DEXRON® II

Capacity:
6.0 liters (6.3 US qts, 5.3 Imp.qts)

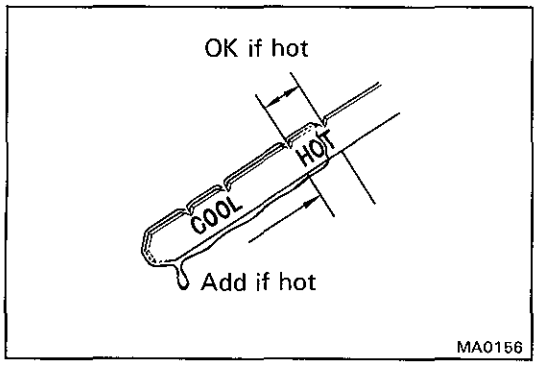

24. **CHECK FLUID LEVEL**
(See page AT-25)