WIPER AND WASHER SYSTEM

FRONT WIPER MOTOR

FRONT WIPER MOTOR INSPECTION

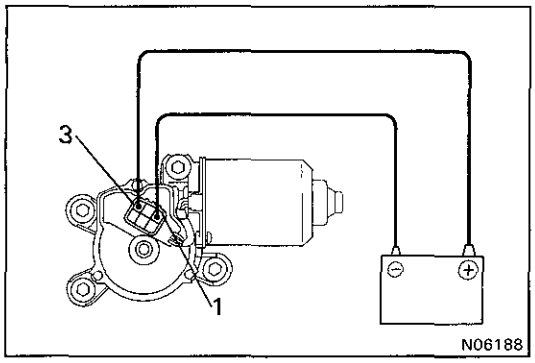

OPERATION AT LOW SPEED

Connect the positive (+) lead from the battery to terminal 3 and negative (−) lead to terminal 1, check that the motor operates at low speed.

If operation is not as specified, replace the motor.

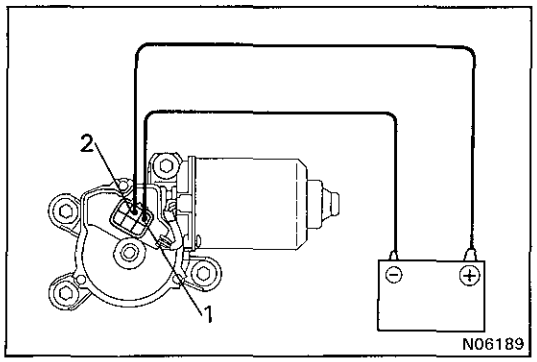

OPERATION AT HIGH SPEED

Connect the positive (+) lead from the battery to terminal 2 and the negative (−) lead to terminal 1, check that the moor operates at high speed.

If operation is not as specified, replace the motor.

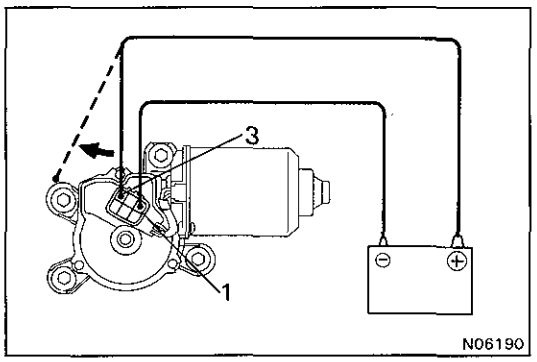

OPERATION, STOPPING AT STOP POSITION

(a) Operate the motor at low speed and stop the motor operation anywhere except at the stop position by disconnecting positive (+) lead from terminal 3.

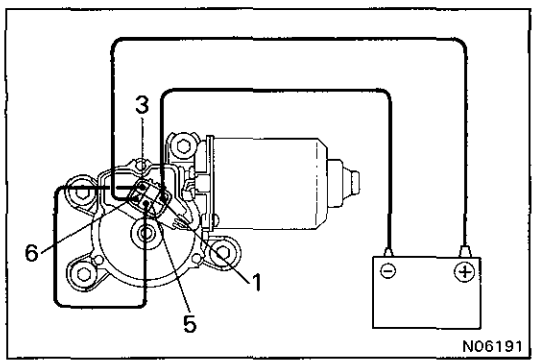

(b) Connect terminal 3 and 5.

(c) Connect the positive (+) lead from the battery to terminal 6 and the negative (−) lead to the terminal 1, check that the motor stops running at the stop position after the motor operates again.

If operation is not as specified, replace the motor.