COMBINATION METER

PARTS LOCATION

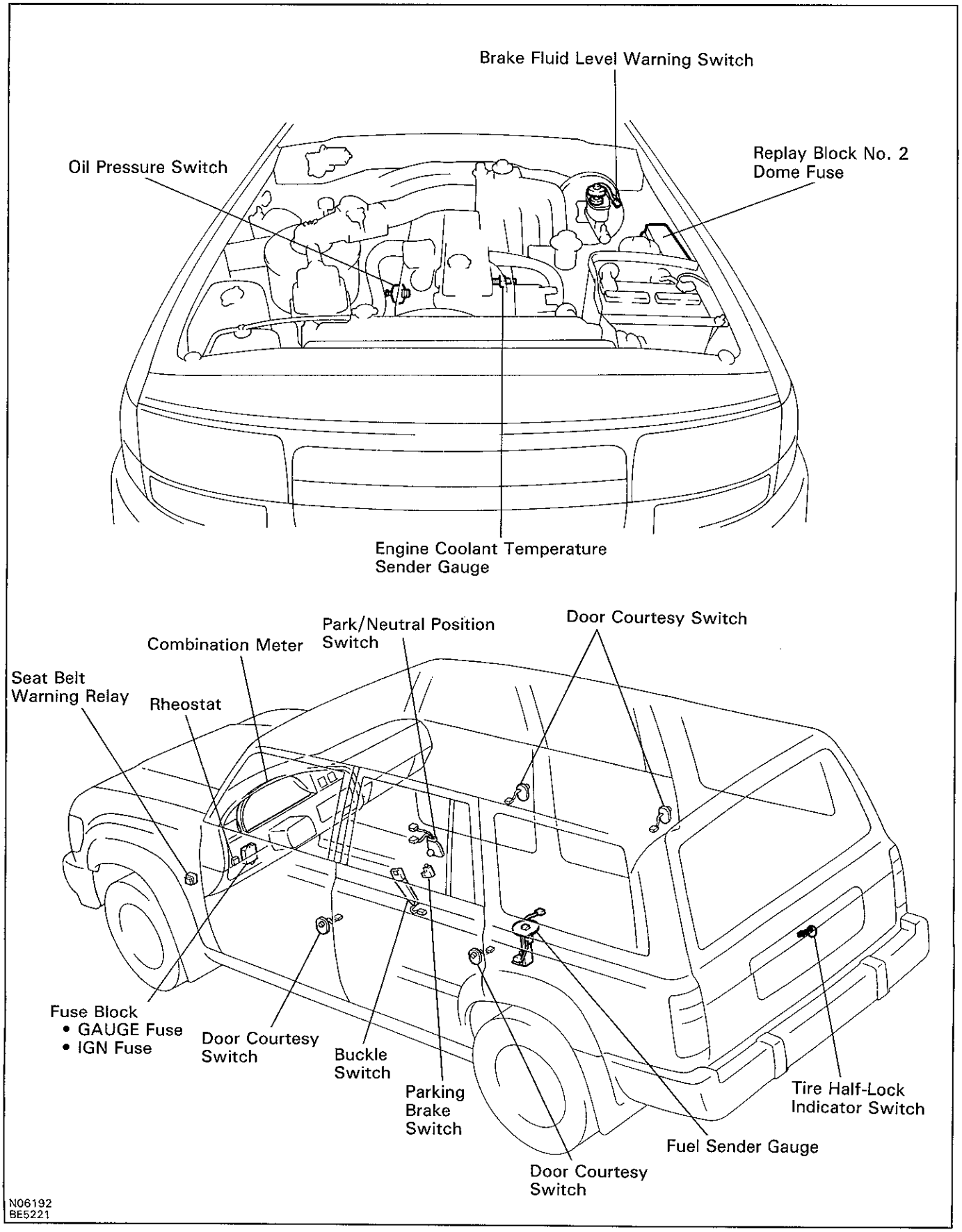

METER CIRCUIT

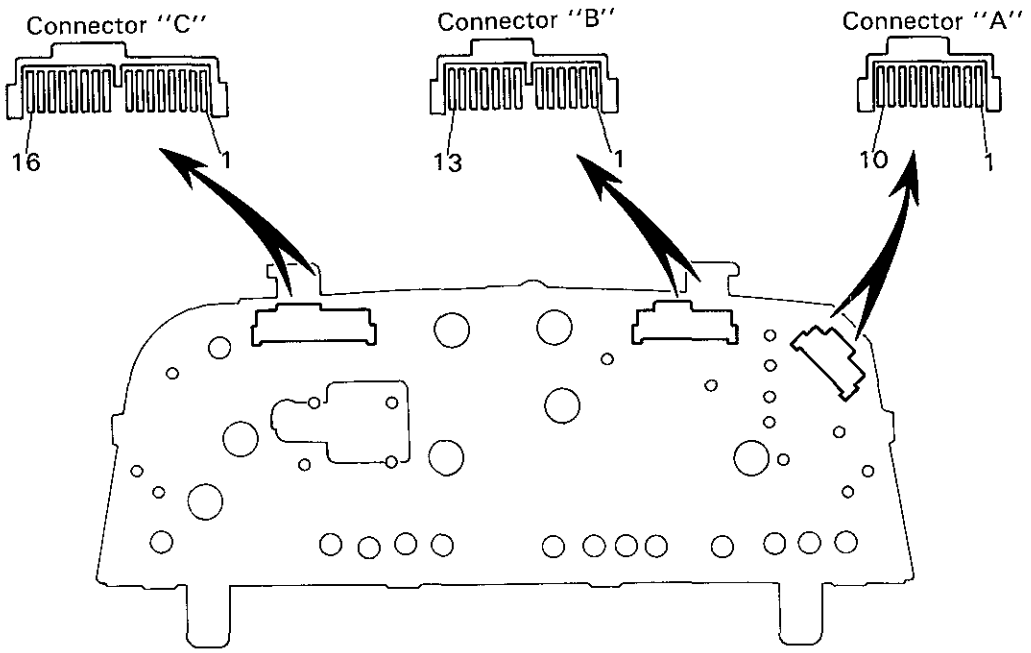

N06193

METER CIRCUIT

Hi-Grade

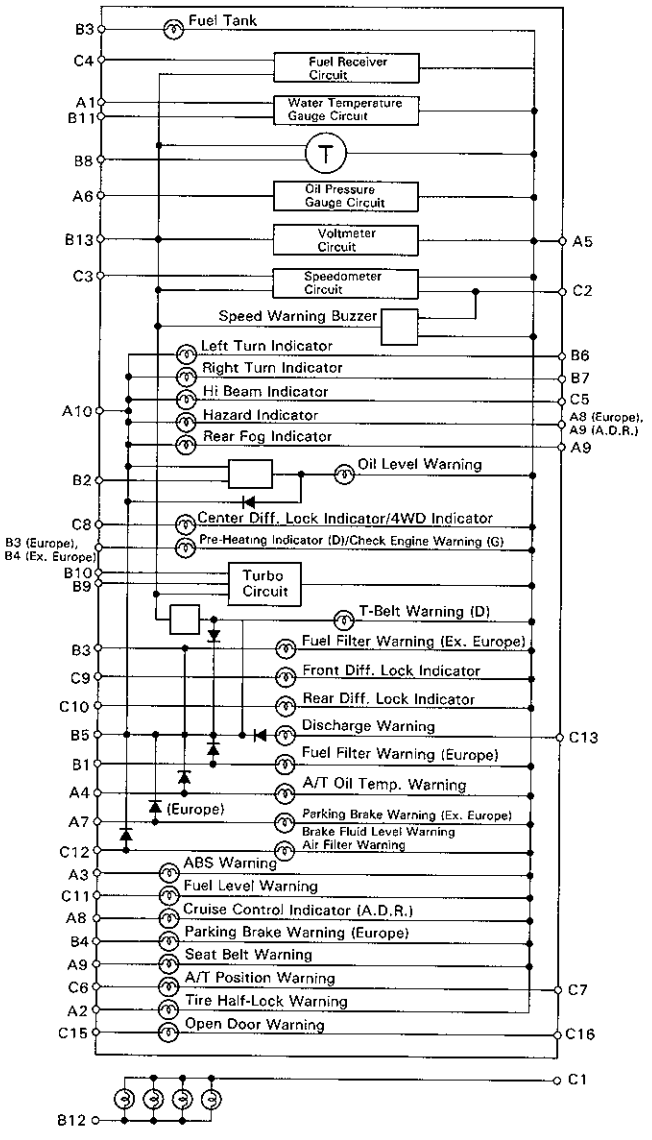

N06714

No.		Wiring Connector Side
A	1	Ground (TEMP)
	2	Tire Half-Lock Indicator Switch
	3	ABS ECU (Ex. G.C.C.)
	4	A/T Fluid Temperature Sensor
	5	GAUGE Fuse
	6	Low Oil Pressure Sender Gauge
	7	Brake Warning Switch Brake Fluid Level Warning (Europe) Brake Fluid Level Warning and Parking Brake Warning (Ex. Europe)
	8	Hazard Warning Light Switch (Europe) Cruise Control ECU (A.D.R.)
	9	Rear Fog Light Switch (Europe) Hazard Warning Light Switch (A.D.R.) Seat Belt Warning Relay (G.C.C.)
	10	Ground
B	1	Fuel Filter Warning Switch (Europe)
	2	Engine Oil Level Sensor (Ex. G.C.C.)
	3	EFI ECU (Gasoline engine) (Europe) Glow Timer Relay (Diesel engine)(Europe) Fuel Tank ECU (Ex. Europe), Fuel Filter Warning
	4	EFI ECU (Gasoline engine) (Ex. Europe) Glow Timer Relay (Diesel engine)(G.C.C., A.D.R.) Parking Brake Switch (Europe)
	5	Charge Light Relay
	6	Light Control Switch (Left)
	7	Light Control Switch (Right)
	8	Igniter (Gasoline engine), Tacho Pick Sensor (Diesel engine M/T), ECT ECU (Diesel engine A/T)
	9	Turbo Pressure Switch B (Diesel engine)
	10	Turbo Pressure Switch A (Diesel engine)
	11	Water Temperature Gauge
	12	Light Control Rheostat, Illumination (−)
	13	Ground (Gauge)
C	1	TAIL Fuse
	2	Speed Control Unit
	3	Speed Sensor
	5	Headlight Hi-Beam
	6	Neutral Start Switch (−)
	7	Neutral Start Switch (+)
	8	Center Diff. Lock Indicator Switch 4WD Indicator Switch (G.C.C., A.D.R.)
	9	Front Diff. Lock Indicator Switch
	10	Rear Diff. Lock Indicator Switch
	11	Fuel Level Warning Switch
	12	Air Filter Warning Switch
	13	IGN Fuse
	14	Fuel Sender Gauge
	15	Door Courtesy Switch
	16	Dome Fuse

METER CIRCUIT

Lo-Grade

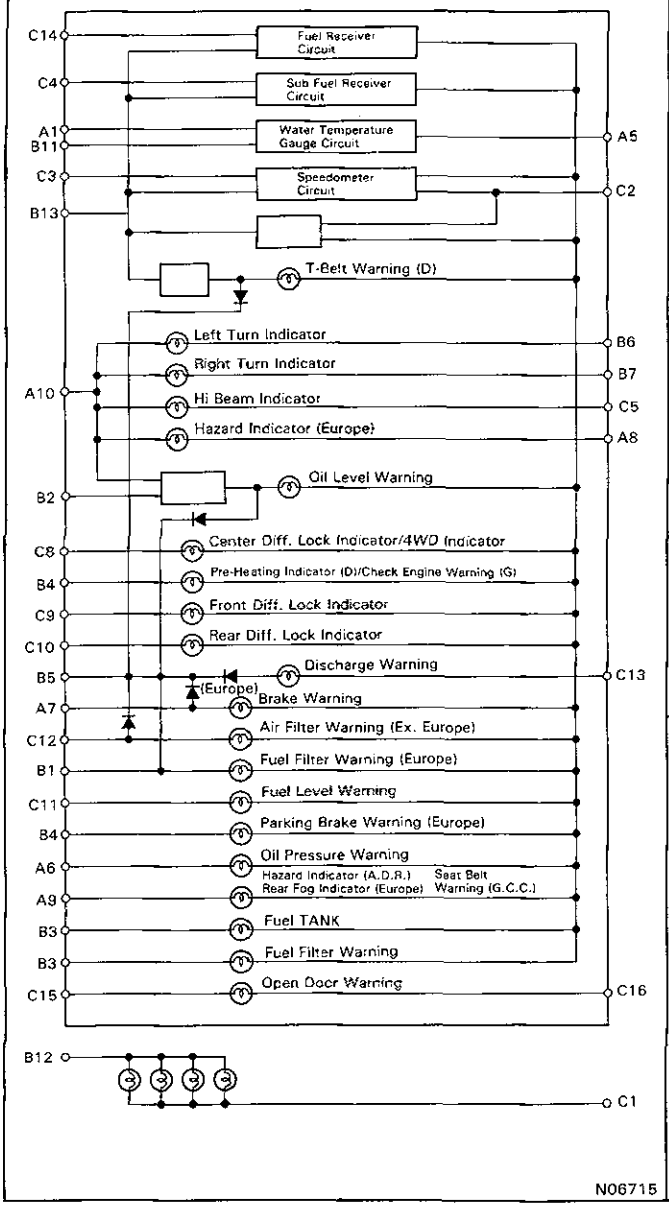

No.		Wiring Connector Side
A	1	Ground (TEMP)
	5	GAUGE Fuse
	6	Oil Pressure Switch
	7	Brake Warning Switch
	8	Hazard Warning Switch (Europe)
	9	Hazard Warning Switch (A.D.R.) Rear Fog Light Switch (Europe) Seat Belt Warning Relay (G.C.C.)
	10	Ground
B	1	Fuel Filter Warning Switch (Europe)
	2	Engine Oil Level Sensor (Ex. G.C.C.)
	3	Fuel Filter Warning (Ex. Europe) Glow Timer Relay (Europe), Fuel Tank (A.D.R.)
	4	EFI ECU (Gasoline)(A.D.R.) Glow Timer Relay (Ex. Europe)
		Parking Brake Switch (Europe)
	5	Charge Light Relay
	6	Light Control Switch (Left)
	7	Light Control Switch (Right)
	11	Engine Coolant Temperature Gauge
	12	Light Control Rheostat, Illumination (−)
	13	Ground (Gauge)
C	1	TAIL Fuse
	2	Speed Control Unit
	3	Speed Sensor
	4	Sub Fuel Sender Gauge (Ex. Europe)
	5	Headlight Hi-Beam
	8	Center Diff. Lock Indicator Switch (Europe) 4WD Indicator Switch (Ex. Europe)
	9	Front Diff. Lock Indicator Switch
	10	Rear Diff. Lock Indicator Switch
	11	Fuel Level Warning Switch
	12	Air Filter Warning Switch (Ex. Europe)
	13	IGN Fuse
	14	Fuel Sender Gauge
	15	Door Courtesy Switch
	16	Dome Fuse

• SHIFT POSITION INDICATOR

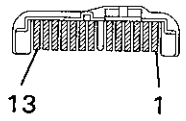

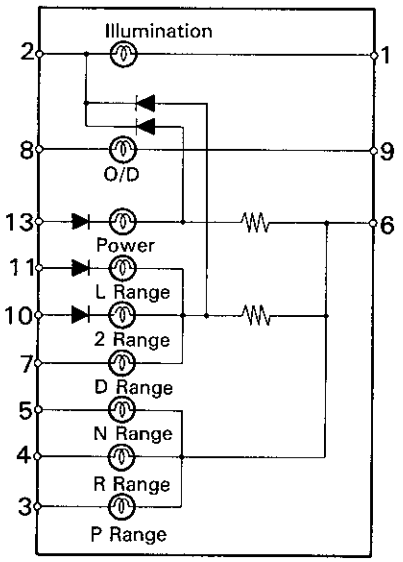

No.	Wiring Connector Side
1	Ground
2	TAIL Fuse
3	Neutral Start Switch "P"
4	Neutral Start Switch "R"
5	Neutral Start Switch "N"
6	Ground
7	Neutral Start Switch "D"
8	GAUGE Fuse
9	O/D Switch
10	Neutral Start Switch "N"
11	Neutral Start Switch "L"
13	ECT SELECT Switch

N03970
N06733

TROUBLESHOOTING

The table below will be useful for you in troubleshooting these electrical problems. The most likely causes of the malfunction are shown in the order of their probability. Inspect each part in the order shown, and replace the part when it is found to be faulty.

Trouble	Part name	See page
Combination meter do not operate.	1. GAUGE Fuse 2. Wire Harness	– –
Speedometer does not operate.	1. Speed Sensor	BE-10
Tachometer does not operate.	1. Tachometer 2. Igniter (Tacho pick sensor, ECT ECU) 3. Wire Harness	BE-11 – –
Fuel gauge does not operate.	1. Receiver Gauge 2. Sender Gauge 3. Wire Harness	BE-11 BE-12 –
Fuel level warning light does not light up.	1. Bulb 2. Fuel Level Warning Switch 3. Wire Harness	– BE-12 –
Water temperature gauge does not operate.	1. Receiver Gauge 2. Sender Gauge 3. Wire Harness	BE-13 BE-13 –
Oil pressure gauge does not operate.	1. Receiver Gauge 2. Sender Gauge 3. Wire Harness	BE-15 BE-15 –
Voltmeter does not operate.	1. Receiver Gauge 2. Wire Harness	BE-14 –
Brake warning light does not light up.	1. Bulb 2. Brake Fluid Level Warning Switch 3. Parking Brake Switch 4. Wire Harness	– BE-16 BE-16 –
Seat belt warning light does not light up.	1. Bulb 2. Seat Belt Warning Switch 3. Seat Belt Warning Relay 4. Wire Harness	– BE-17 BE-17 –
Open door warning light does not light up.	1. Bulb 2. Door Courtesy Switch 3. Wire Harness	– BE-16 –
Tire half-lock warning light does not light up.	1. Bulb 2. Tire Half-Lock Indicator Switch 3. Wire Harness	– BE-18 –

Trouble	Part name	See page
ABS warning light does not light up.	1. Bulb 2. ABS ECU 3. Wire Harness	– – –
Meter illumination control system does not operate.	1. Bulb 2. Light Control Rheostat 3. Wire Harness	– BE-19 –
Shift position indicator light does not light up.	1. Bulb 2. Neutral Position Switch 3. Wire Harness	– – –
Engine oil level warning light does not light up.	1. Bulb 2. Engine Oil Level Sensor 3. Wire Harness	– BE-19 –

(km/h) A.D.R., General

Standard indication	Allowable range
40	36 – 44
60	54 – 66
80	72 – 88
100	90 – 110
120	108 – 132
140	126 – 154
160	144 – 176

(km/h) Europe, G.C.C.

Standard indication	Allowable range
20	20 – 26
40	40 – 48
60	60 – 70
80	80 – 92
100	100 – 114
120	120 – 136
140	140 – 158
160	160 – 180

(mph) General, Europe

Standard indication	Allowable range
20	20 – 24.5
40	40 – 46.5
60	60 – 68.5
80	80 – 90.5
100	100 – 112.5

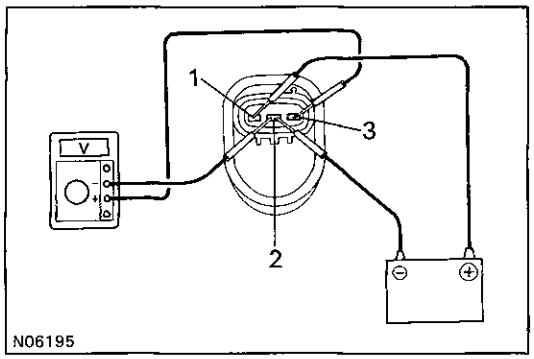

SPEEDOMETER SYSTEM

INSPECT SPEEDOMETER (ON-VEHICLE)

(a) Using a speedometer tester, inspect the speedometer for allowable indication error and check the operation of the odometer.

HINT: Tire wear and tire over or under inflation will increase the indication error.

(b) Check the speedometer for pointer vibration and abnormal noise.

HINT: Pointer vibration can be caused by a loose speedometer cable.

SPEED SENSOR INSPECTION

(a) Connect the positive (+) lead from battery to terminal 1 and negative (−) lead to terminal 2.

(b) Connect the positive (+) lead from tester to terminal 3 and negative (−) lead to terminal 2.

(c) Revolve shaft.

(d) Check that there is voltage changer from approx. 0 V to 11 V or more between terminal 3 and 2.

HINT: The voltage change should be 20 times per each revolution of the speed sensor shaft.

If operation is not as specified, replace the sensor.

DC 13.5 V 20°C (68°F) rpm	
Standard Indication	Allowable range
700	630 – 770
1,000	900 – 1,100
2,000	1,875 – 2,125
3,000	2,850 – 3,150
4,000	3,850 – 4,150
5,000	4,850 – 5,150

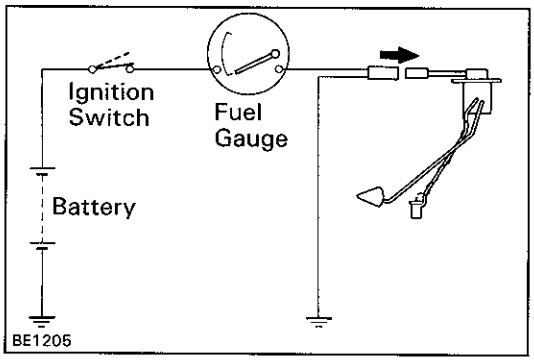

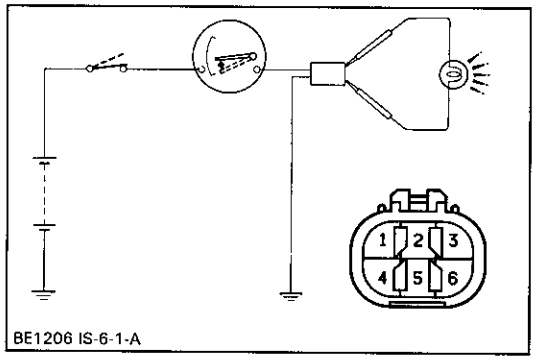

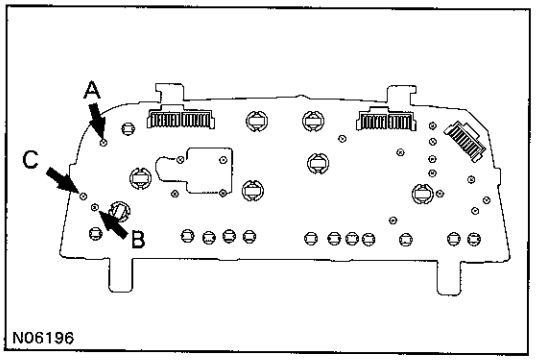

TACHOMETER SYSTEM

TACHOMETER INSPECTION

INSPECT TACHOMETER (ON-VEHICLE)

(a) Connect a tune-up test tachometer, and start the engine.

NOTICE:

- **Reversing the connection of the tachometer will damage the transistors and diodes inside.**
- **When removing or installing the tachometer, be careful not to drop or subject it to heavy shocks.**

(b) Compare the tester and tachometer indications.

If error is excessive, replace the tachometer.

FUEL GAUGE SYSTEM

FUEL RECEIVER GAUGE INSPECTION

OPERATION

(a) Disconnect the connector from the sender gauge.

(b) Turn the ignition switch ON, check that the receiver gauge needle indicates EMPTY.

(c) Connect terminals 4 and 5 on the wire harness side connector through a 3.4 watts test bulb.

(d) Turn the ignition switch ON, check that the bulb lights up and the receiver gauge needle moves towards the full side.

HINT: Because of the silicon oil in the gauge, it will take a short time for needle to stabilize.

If operation is not as specified, inspect the receiver gauge resistance.

RESISTANCE

Measure the resistance between terminals.

Between terminals	Resistance (Ω)
A – B	85.5 – 105.5
A – C	126 – 150
C – B	*90 – 110
*: Include voltmeter resistance.	

If resistance value is not as specified, replace the receiver gauge.

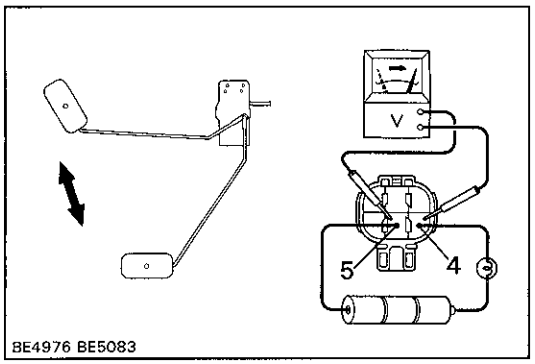

BE4976 BE5083

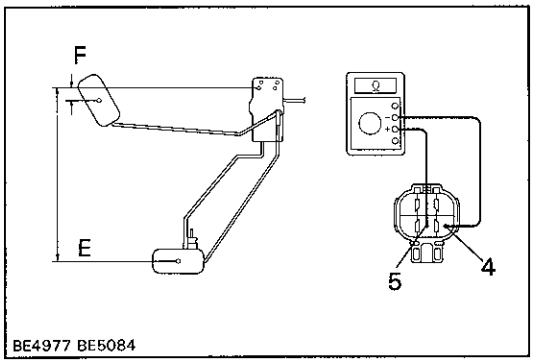

BE4977 BE5084

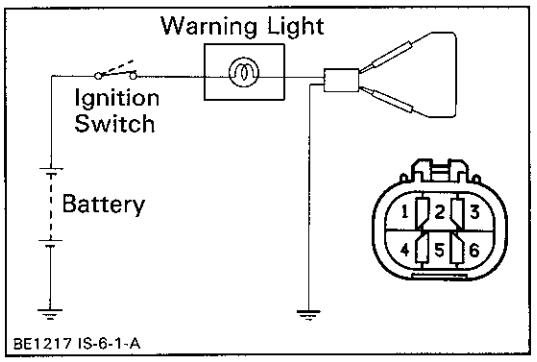

BE1217 IS-6-1-A

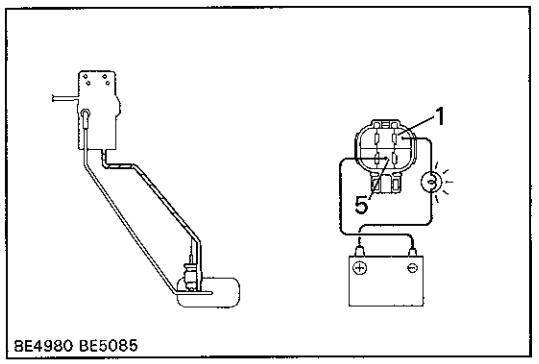

BE4980 BE5085

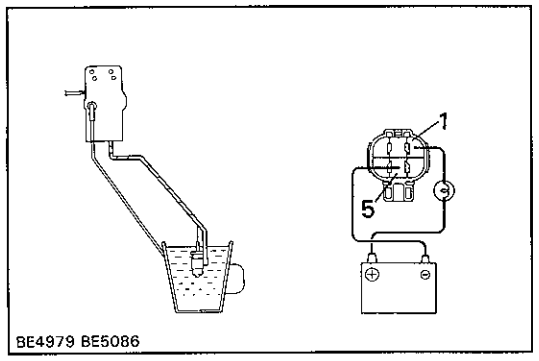

BE4979 BE5086

FUEL SENDER GAUGE INSPECTION

OPERATION

(a) Connect a series of three 1.5 volts dry cell batteries.

(b) Connect the positive (+) lead from the dry cell batteries to terminal 4 through a 3.4 watts test bulb and the negative (−) lead to terminal 5.

(c) Connect the positive (+) lead from the voltmeter to terminal 4 and the negative (−) lead to terminal 5.

(d) Check that the voltage rises as the float is moved from the full to empty position.

RESISTANCE

Measure the resistance between terminals 4 and 5.

Float position mm (in.)	Resistance (Ω)
F approx. 15 (0.59)	approx. 3
E approx. 200 (7.87)	approx. 110

If resistance value is not as specified, replace the sender gauge.

FUEL LEVEL WARNING SYSTEM

INSPECT WARNING LIGHT

(a) Disconnect the connector from the sender gauge.

(b) Connect terminals 1 and 5 on the wire harness side connector.

(c) Turn the ignition switch ON, check that the warning light lights up.

If the warning light does not light up, test the bulb.

INSPECT WARNING SWITCH

(a) Apply battery voltage between terminals 1 and 5 through a 3.4 watts test bulb, check that the bulb lights up.

HINT: It will take a short time for the bulb to light up.

(b) Submerge the switch in fuel, check that the bulb goes out.

If operation is not specified, replace the sender gauge.

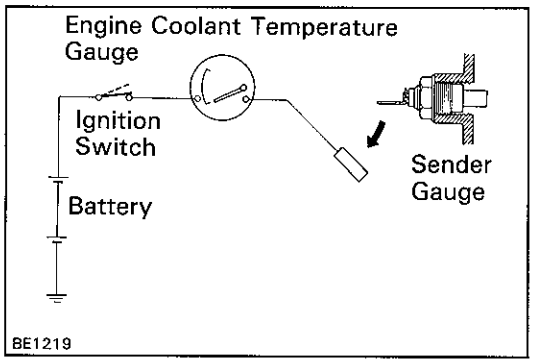

WATER TEMPERATURE GAUGE SYSTEM

WATER TEMPERATURE RECEIVER GAUGE INSPECTION

OPERATION

(a) Disconnect the connector from the sender gauge.

(b) Turn the ignition switch ON, check that the receiver gauge needle indicates COOL.

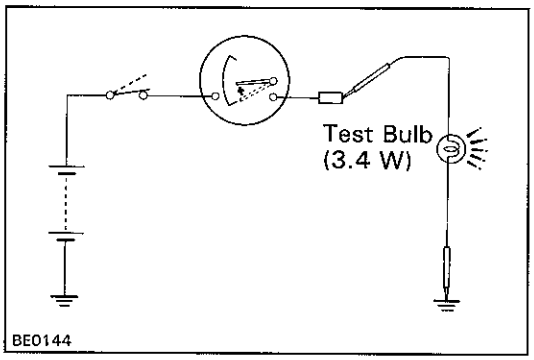

(c) Ground terminal on the wire harness side connector through a 3.4 watts test bulb.

(d) Turn the ignition switch ON, check that the bulb lights up and the receiver gauge needle moves to the hot side.

If operation is as specified, replace the sender gauge. Then recheck the system.

If operation is not as specified, measure the receiver gauge resistance.

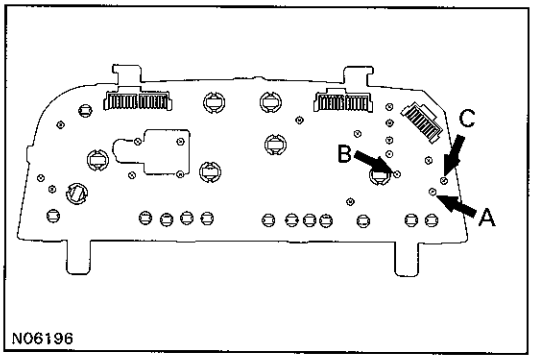

RESISTANCE

Measure the resistance between terminals.

Between terminals	Resistance (Ω)
A – B	71 – 79
A – C	117 – 141
B – C	185 – 215

HINT: Connect the test leads so that the current from the ohmmeter can flow according to the above order. This circuit include the diode.

If resistance value is not as specified, replace the receiver gauge.

VOLTMETER SYSTEM

INSPECT VOLTMETER (ON-VEHICLE)

Compare the tester and voltmeter indications.

If error is excessive, replace the voltmeter.

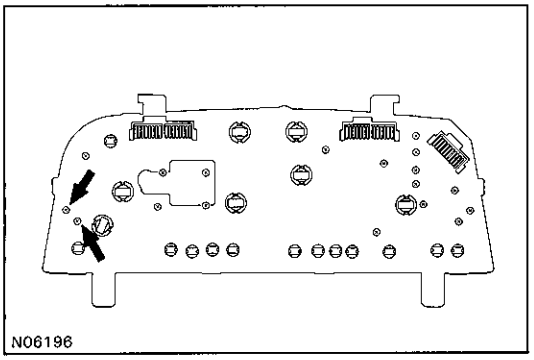

RESISTANCE

Measure the receiver gauge resistance between terminals.

Resistance: 90 – 110 Ω

If resistance value is not as specified, replace the receiver gauge.

HINT: This resistance include fuel receiver gauge resistance.

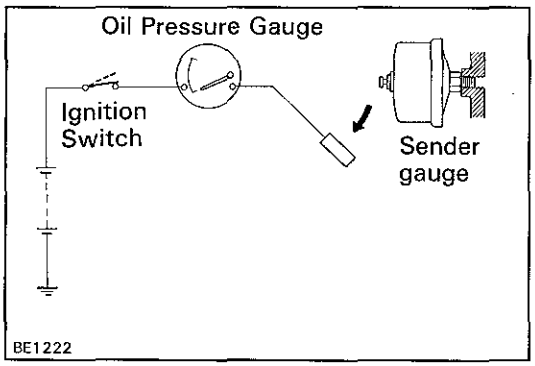

OIL PRESSURE GAUGE SYSTEM

OIL PRESSURE RECEIVER GAUGE INSPECTION

OPERATION

(a) Disconnect the connector from the sender gauge.

(b) Turn the ignition switch ON, check that the receiver gauge needle indicates LOW.

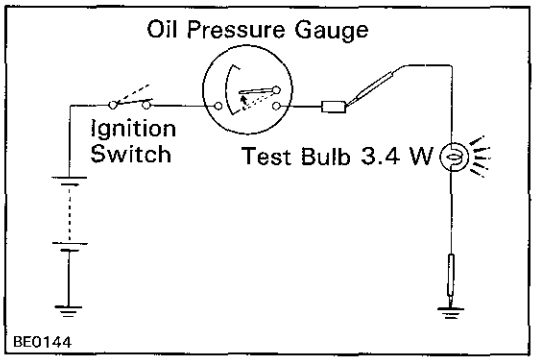

(c) Ground terminal on the wire harness side through a 3.4 W test bulb.

(d) Turn the ignition switch ON, check that the bulb lights up and the receiver gauge needle, moves to the high side.

If operation is not as specified, measure the receiver gauge resistance.

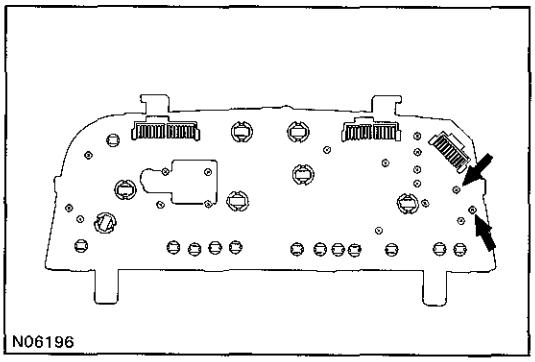

RESISTANCE

Measure the receiver gauge resistance between terminals.

Resistance: 22 – 28 Ω

If resistance value is not as specified, replace the receiver gauge.

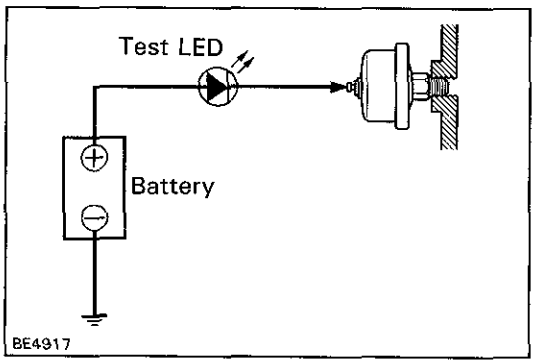

OIL PRESSURE SENDER GAUGE INSPECTION

INSPECT SENDER GAUGE

(a) Disconnect the connector from the sender gauge.

(b) Apply battery voltage to the sender gauge terminal through a test LED.

(c) Check that the bulb does not light when the engine is stopped.

(d) Check that the LED flashes when the engine is running. The number of flashed should vary with engine speed.

If operation is not as specified, replace the sender gauge.

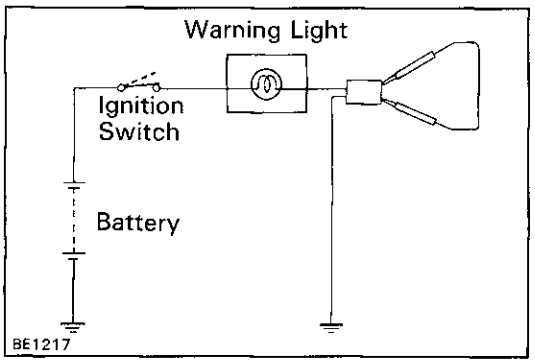

BRAKE WARNING SYSTEM

BRAKE WARNING LIGHT INSPECTION
INSPECT WARNING LIGHT

(a) Disconnect the connectors from the level warning switch, parking brake switch.

(b) Connect terminals on the wire harness side connector of the level warning switch connector.

(c) Turn the ignition switch ON, check that the warning light lights up.

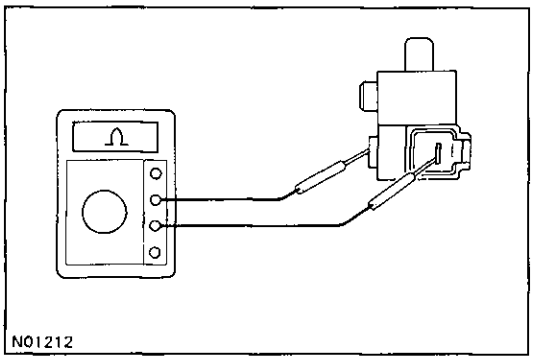

PARKING BRAKE SWITCH INSPECTION
INSPECT SWITCH

(a) Check that there is continuity between terminal and the switch set nut with switch pin released. (parking brake lever pulled up)

(b) Check that there is no continuity between terminal and the switch set nut with switch pin pushed in. (parking brake lever released)

If operation is not as specified, replace the switch.

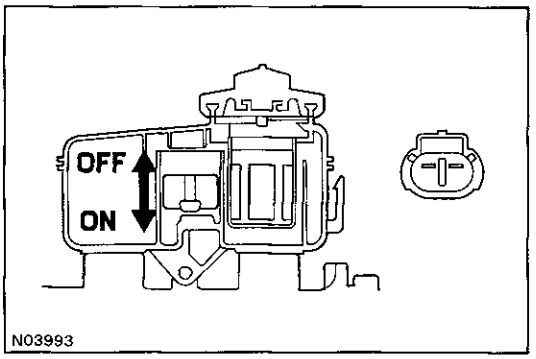

BRAKE FLUID LEVEL WARNING SWITCH INSPECTION
INSPECT SWITCH

(a) Remove the reservoir tank cap and strainer.

(b) Disconnect the connector.

(c) Check that there is no continuity between terminals with the switch OFF (float up).

(d) Use syphon, etc. to take fluid out of the reservoir tank.

(e) Check that there is continuity between terminals with the switch ON (float down).

(f) Pour the fluid back in the reservoir tank.

If operation is not as specified, replace the switch.

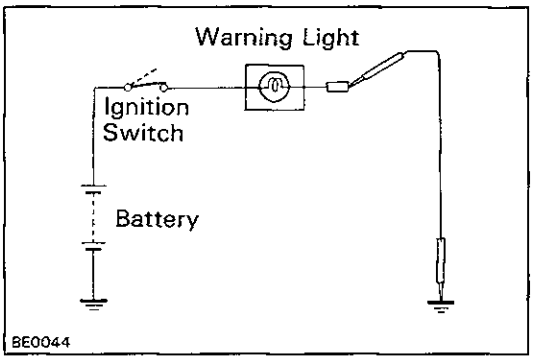

OPEN DOOR WARNING SYSTEM

OPEN DOOR WARNING INSPECTION
INSPECT WARNING LIGHT

(a) Disconnect the connector form the door courtesy switch and ground terminal on the wire harness side connector.

(b) Turn the ignition switch ON, check that the warning light lights up.

If the warning light does not light up, test the bulb.

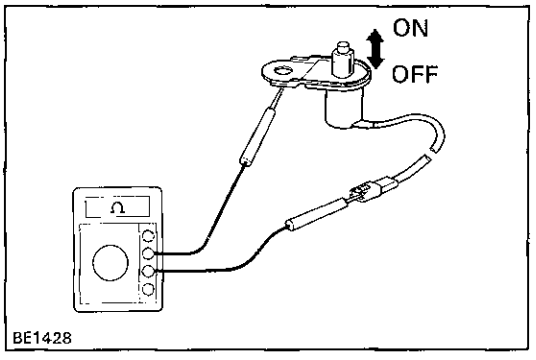

DOOR COURTESY SWITCH INSPECTION
INSPECT COURTESY SWITCH

(a) Check that there is continuity between terminal and the switch body with the ON (switch pin released: opened door).

(b) Check that there is no continuity between terminal and the switch body with the OFF (switch pin pushed in: closed door).

If operation is not as specified, replace the switch.

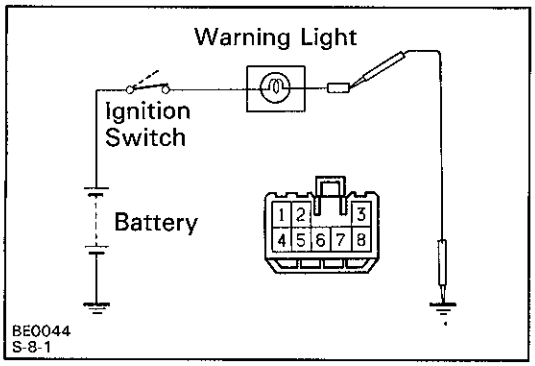

SEAT BELT WARNING SYSTEM

SEAT BELT WARNING INSPECTION

INSPECT WARNING LIGHT

(a) Disconnect the connector from the seat belt warning relay.

(b) Ground terminal 2 on the wire harness side connector.

(c) Turn the ignition switch ON, check that the warning light lights up.

If the warning light does not light, test the bulb.

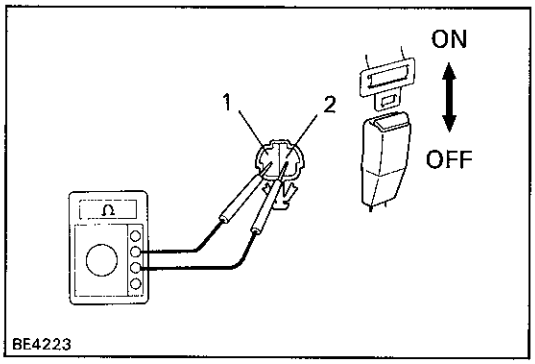

SEAT BELT BUCKLE SWITCH INSPECTION

INSPECT SWITCH

(a) Check that there is no continuity between terminals with the switch ON (belt unfastened).

(b) Check that there is continuity between terminals with the switch OFF (belt fastened).

If operation is not as specified, replace the seat belt inner.

DOOR COURTESY SWITCH

DOOR COURTESY SWITCH INSPECTION

See page BE-16

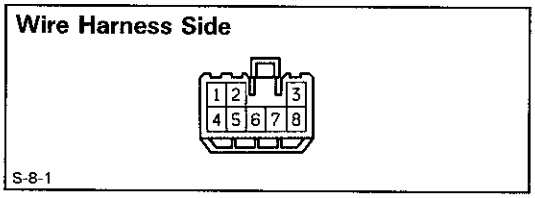

SEAT BELT WARNING RELAY INSPECTION

RELAY CIRCUIT

Disconnect the connector from the relay and inspect the connector on the wire harness side as shown in the chart.

Check for	Tester connection	Condition		Specified value
Voltage	5 — Ground	Ignition switch position	ON	Battery voltage
			LOCK or ACC	No voltage
	1 — Ground	Constant		Battery voltage

Continuity	3 – Ground	Driver's door	Open	Continuity
			Close	No continuity
	4 – Ground	Driver's seat belt	Fasten	Continuity
			Unfasten	No continuity
	7 – Ground	Ignition key	Set	Continuity
			Remove	No continuity
	6 – Ground	Constant		Continuity

If circuit is as specified, try another relay.

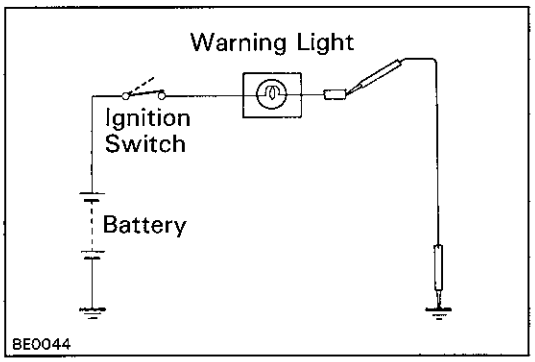

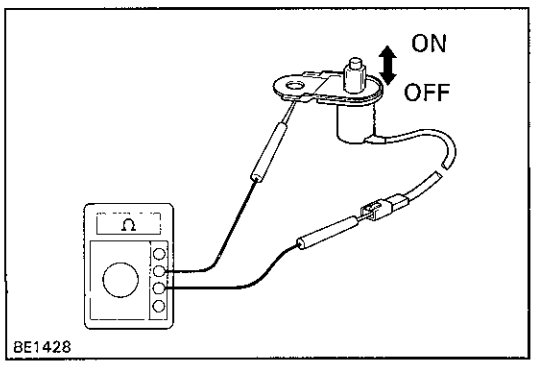

TIRE HALF-LOCK WARNING SYSTEM

TIRE HALF-LOCK WARNING INSPECTION

INSPECT WARNING LIGHT

(a) Disconnect the connector from the door courtesy switch and ground terminal on the wire harness side connector.

(b) Turn the ignition switch ON, check that the warning light lights up.

If the warning light does not light up, test the bulb.

TIRE HALF-LOCK INDICATOR SWITCH INSPECTION

INSPECT SWITCH

(a) Check that there is continuity between terminal and the switch body with the ON (switch pin released: opened door).

(b) Check that there is no continuity between terminal and the switch body with the OFF (switch pin pushed in: closed door).

If operation is not as specified, replace the switch.

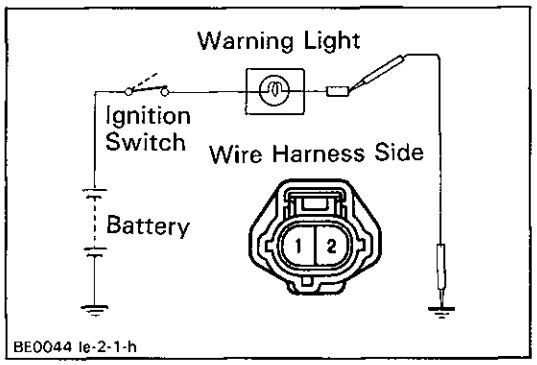

ENGINE OIL LEVEL WARNING SYSTEM

INSPECT WARNING LIGHT

(a) Disconnect the connector from the engine oil level sensor.

(b) Ground terminal 2 on the wire harness side connector.

(c) Turn the ignition switch ON, check that the warning light lights up.

If the warning light does not light up, test the bulb.

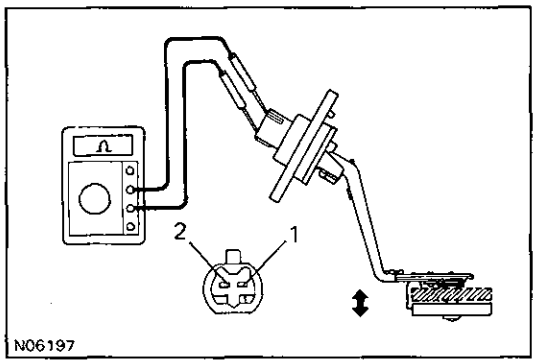

INSPECT ENGINE OIL LEVEL SENSOR

(a) Check that there is continuity between terminals with the switch each position.

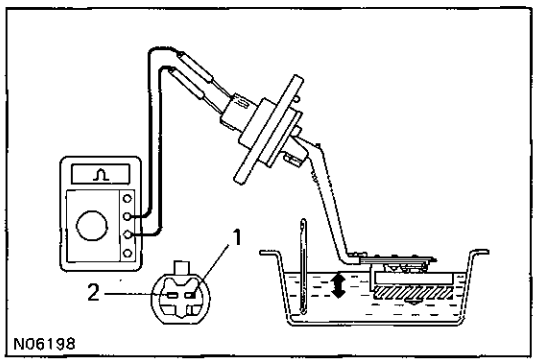

(b) Heat the switch to above 60°C (140°F) in an oil bath.

(c) Check that there is continuity between terminals with the switch ON (float up).

(d) Check that there is no continuity between terminals with the switch OFF (float down).

If operation is not as specified, replace the sensor.

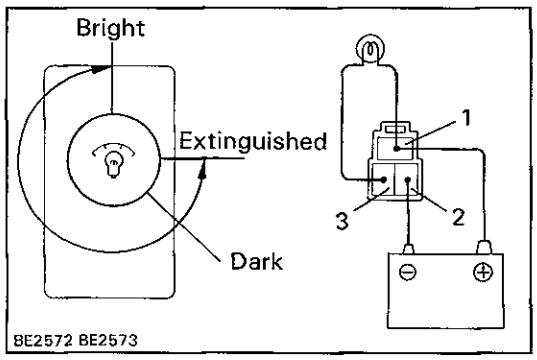

METER ILLUMINATION CONTROL SYSTEM

INSPECT LIGHT CONTROL RHEOSTAT

(a) Connect terminals 1 and 3 through a 3.4 watts test bulb.

(b) Connect the positive (+) lead from the battery to terminal 1 and the negative (−) lead to terminal 2.

(c) Turn the rheostat knob to fully counterclockwise, check that the test bulb goes out.

(d) Gradually turn the rheostat knob to clockwise, check that the test bulb brightness changes from dark to bright.

If operation is not as specified, replace the rheostat.

HINT: Illumination lights with adjustable brightness.

- Cigarette Lighter
- Ash Receptacle
- Antenna Switch
- Defogger Switch
- Headlight Cleaner Switch
- Audio
- A/C Control Assembly
- Center Diff. Lock Switch
- Hazard Warning Light Switch
- Shift Lever