POWER SEAT CONTROL SYSTEM

PARTS LOCATION

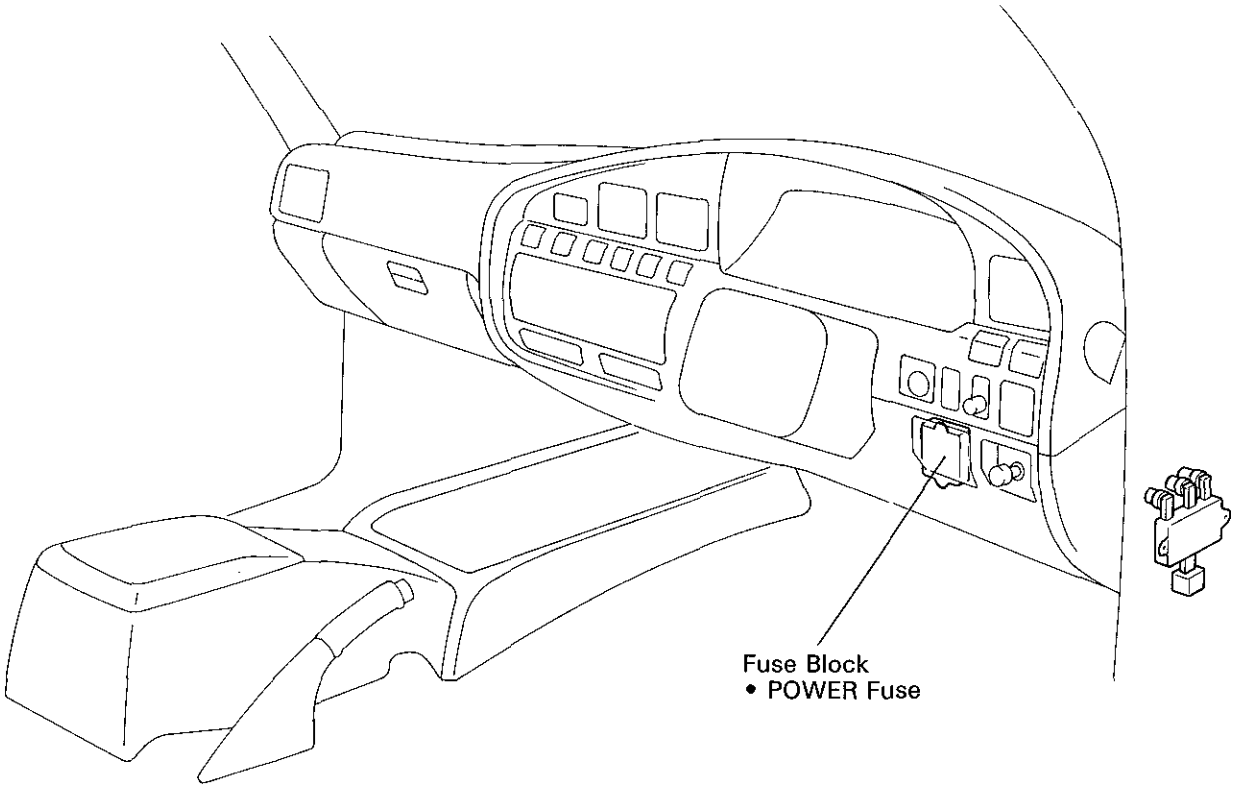

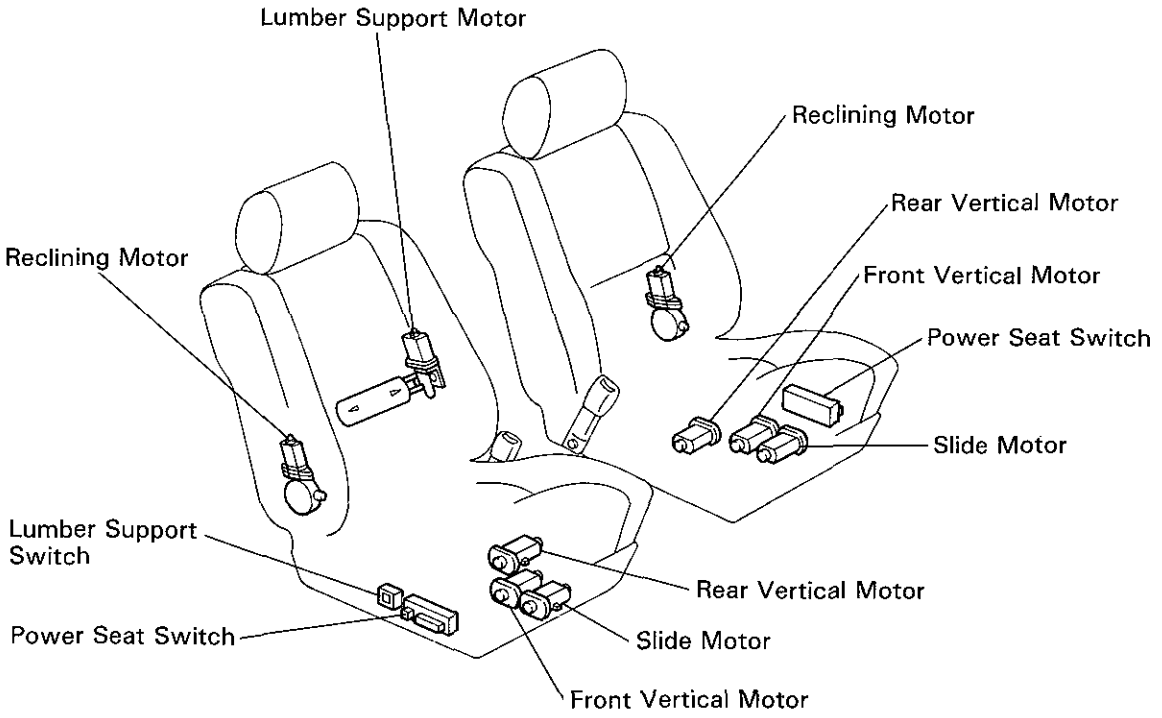

BE5073R
NO6200R

TROUBLESHOOTING

The table below will be useful for you in troubleshooting these electrical problems. The most likely causes of the malfunction are shown in the order of their probability. Inspect each part in the order shown, and replace the part when it is found to be faulty.

Trouble	Part name	See page
Power seat does not operate. (Door lock does not operate.)	1. FL AM1 2. POWER Fuse 3. Wire Harness 4. Power Seat Switch (D) 5. Power Seat Switch (P)	– – – BE-23 BE-24
Power seat does not operate. (Door lock is normal.)	1. POWER Fuse 2. Wire Harness 3. Power Seat Switch (D) 4. Power Seat Switch (P)	– – BE-23 BE-24
Driver's seat does not operate.	1. Power Seat Switch (D) 2. Wire Harness	BE-23 –
Passenger's seat does not operate.	1. Power Seat Switch (P) 2. Wire Harness	BE-24 –
"Slide operation" does not operate.	1. Power Seat Switch (D) 2. Power Seat Switch (P) 3. Wire Harness	BE-23 BE-24 –
"Front vertical operation" does not operate.	1. Power Seat Switch (D) 2. Power Seat Switch (P) 3. Wire Harness 4. Slide Motor (D, P)	BE-23 BE-24 – BE-25
"Rear vertical operation" does not operate.	1. Power Seat Switch (D) 2. Power Seat Switch (P) 3. Wire Harness 4. Front Vertical Motor (D, P)	BE-23 BE-24 – BE-25
"Reclining operation" does not operate.	1. Power Seat Switch (D) 2. Power Seat Switch (P) 3. Wire Harness 4. Reclining Motor (D, P)	BE-23 BE-24 – BE-26
"Lumber support operation" does not operate.	1. Lumber Support Switch (D) 2. Wire Harness 3. Lumber Support Motor (D)	BE-23 – BE-28

(D): Driver's Seat
(P): Passenger's Seat

POWER SEAT SWITCH

POWER SEAT SWITCH INSPECTION

(DRIVER'S SIDE)

CONTINUITY

Inspect the switch continuity between terminals.

*1: FORWARD
*2: BACKWARD

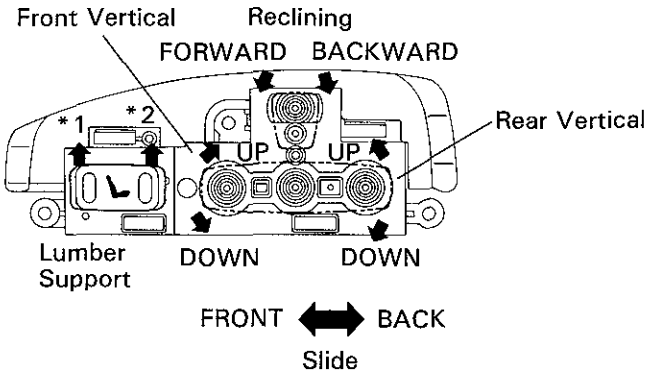

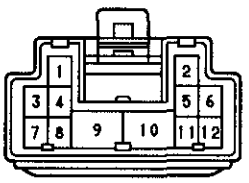

N06201R eg-12-1

Switch position / Terminal		1	2	3	4	5	6	7	8	9	10	11	12
Slide Switch	FORWARD					○			○	○	○		
	OFF					○			○	○			
	BACKWARD					○				○	○		
Front Vertical Switch	UP				○						○	○	○
	OFF				○							○	○
	DOWN				○						○	○	○
Rear Vertical Switch	UP		○				○	○			○		
	OFF		○				○	○					
	DOWN		○				○	○			○		
Reclining Switch	FORWARD				○			○		○	○		
	OFF				○			○		○			
	BACKWARD				○			○		○	○		
Lumber Support Switch	FORWARD	○		○						○	○		
	OFF	○		○						○			
	BACKWARD	○		○						○	○		

If continuity is not as specified, replace the switch.

(PASSENGER' S SIDE)

CONTINUITY

Inspect the switch continuity between terminals.

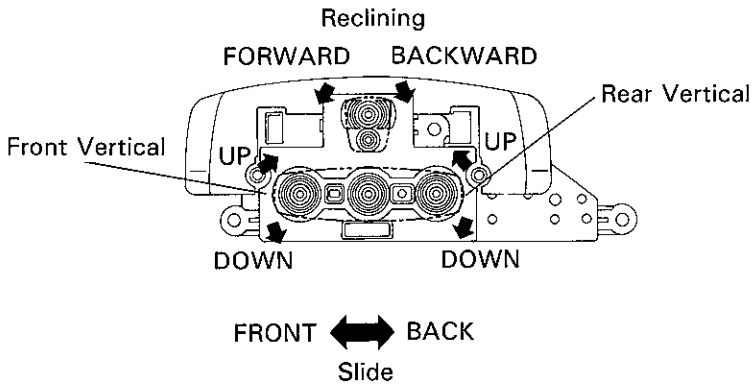

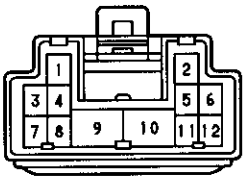

N06202R eg-12-1

Terminal / Switch position		2	4	5	6	7	8	9	10	11	12
Slide Switch	FORWARD			○			○	○	○		
	OFF			○			○	○			
	BACKWARD			○			○	○	○		
Front Vertical Switch	UP		○						○	○	○
	OFF		○							○	○
	DOWN		○						○	○	○
Rear Vertical Switch	UP	○			○	○			○		
	OFF	○			○	○					
	DOWN	○			○	○			○		
Reclining Switch	FORWARD		○			○		○	○		
	OFF		○			○		○			
	BACKWARD		○			○		○	○		

If continuity is not as specified, replace the switch.

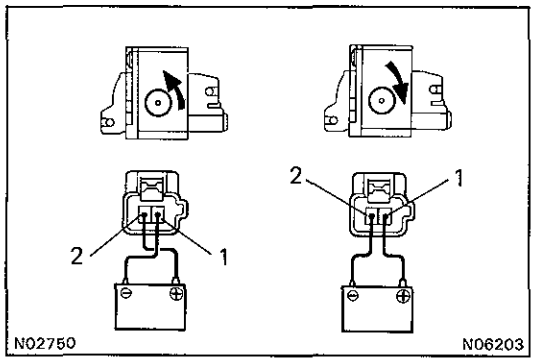

POWER SEAT MOTOR

SLIDE MOTOR INSPECTION

MOTOR OPERATION

(a) Connect the positive (+) lead from the battery to terminal 1 and the negative (−) lead to terminal 2, check that the motor turns counterclockwise.

(b) Reverse the polarity, check that the motor turns clockwise.

If operation is not as specified, replace the motor.

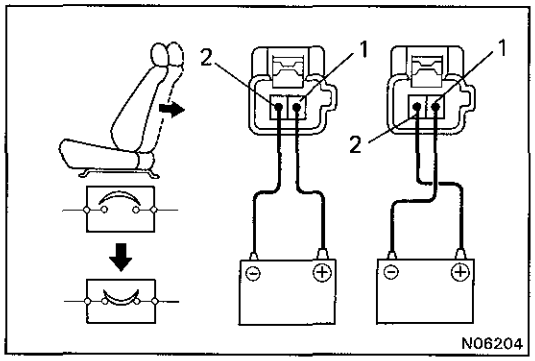

CIRCUIT BREAKER OPERATION

(a) Connect the positive (+) lead and the negative (−) lead from the battery to slide motor connector (illustrated terminals), and slide the seat to front end position.

(b) Continue to apply voltage, check that there is a circuit breaker operation noise within 4 to 60 seconds.

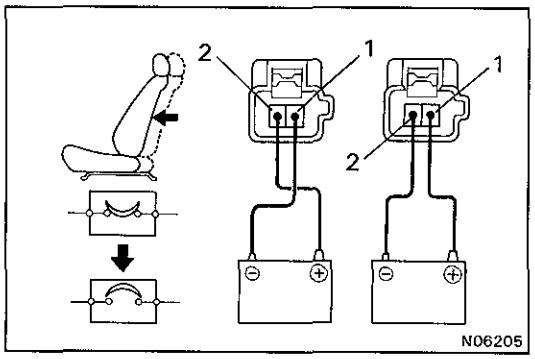

(c) Reverse the polarity, check that the seat begins to move backwards within approximately 60 seconds.

If operation is not as specified, replace the motor.

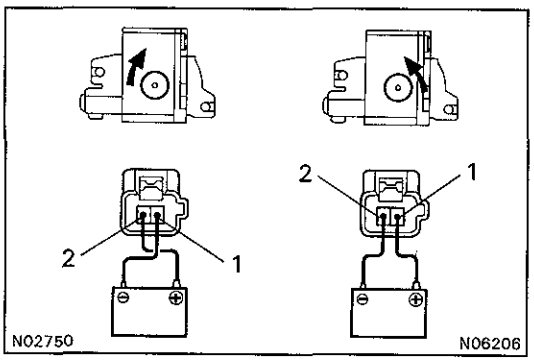

FRONT VERTICAL MOTOR INSPECTION

MOTOR OPERATION

(a) Connect the positive (+) lead from the battery to terminal 1 and the negative (−) lead to terminal 2, check that the motor turns counterclockwise.

(b) Reverse the polarity, check that the motor turns clockwise.

If operation is not as specified, replace the motor.

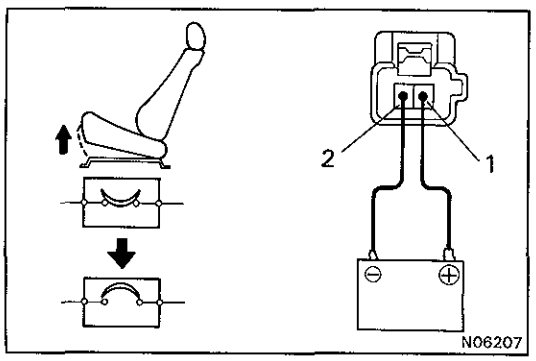

CIRCUIT BREAKER OPERATION

(a) Connect the positive (+) lead and the negative (−) lead from the battery to the front vertical motor connector (illustrated terminals), and move the front edge of seat cushion to the highest position.

(b) Continue to apply voltage, check that there is a circuit breaker operation noise within 4 to 60 seconds.

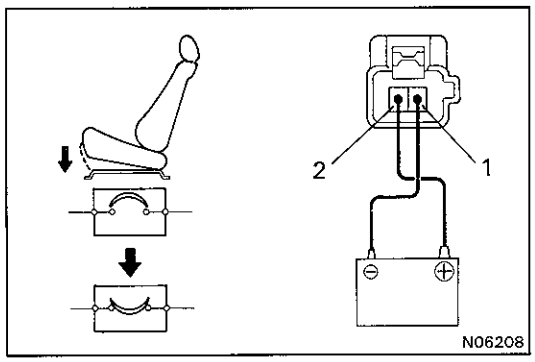

(c) Reverse the polarity, check that the seat cushion begins to descend within approximately 60 seconds.

If operation is not as specified, replace the motor.

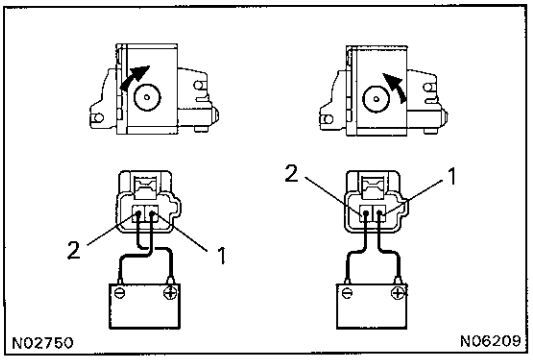

REAR VERTICAL MOTOR INSPECTION
MOTOR OPERATION

(a) Connect the positive (+) lead from the battery to terminal 2 and the negative (−) lead to terminal 1, check that the motor turns counterclockwise.

(b) Reverse the polarity, check that the motor turns clockwise.

If operation is not as specified, replace the motor.

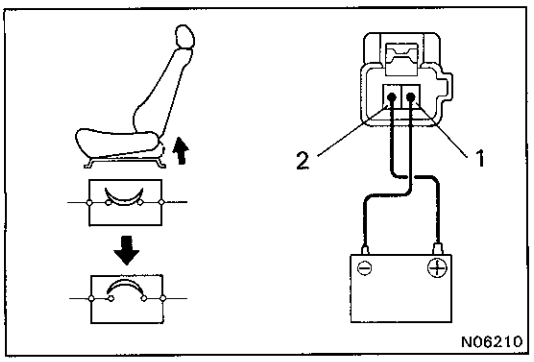

CIRCUIT BREAKER OPERATION

(a) Connect the positive (+) lead and the negative (−) lead from the battery to the rear vertical motor connector (illustrated terminals), and move the front edge of seat cushion to the highest position.

(b) Continue to apply voltage, check that there is a circuit breaker operation noise within 4 to 60 seconds.

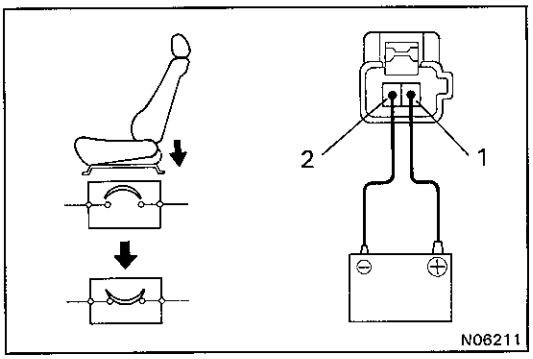

(c) Reverse the polarity, check that the seat cushion begins to descend within approximately 60 seconds.

If operation is not as specified, replace the motor.

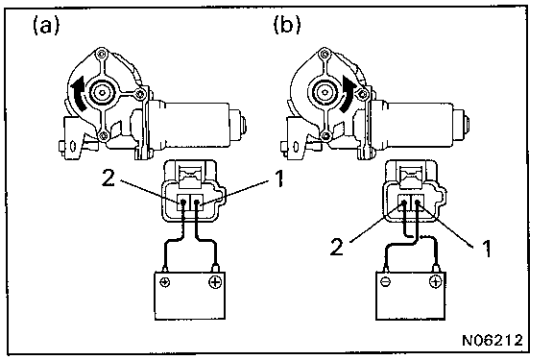

RECLINING MOTOR INSPECTION
MOTOR OPERATION DRIVER' S SEAT

(a) Connect the positive (+) lead from the battery to terminal 1 and the negative (−) lead to terminal 2, check that the motor turns clockwise.

(b) Reverse the polarity, check that the motor turns counterclockwise.

If operation is not as specified, replace the motor.

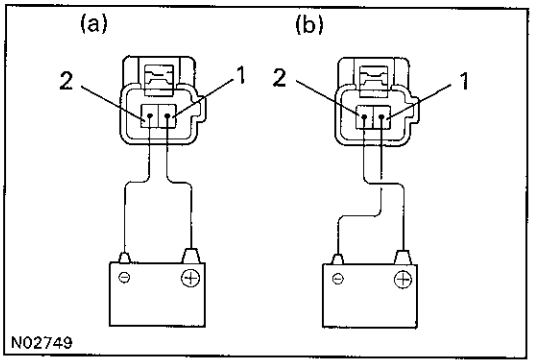

MOTOR OPERATION PASSENGER' S SEAT

(a) Connect the positive (+) lead from the battery to terminal 1 and the negative (−) lead to terminal 2, check that the motor turns counterclockwise.

(b) Reverse the polarity, check that the motor turns clockwise.

If operation is not as specified, replace the motor.

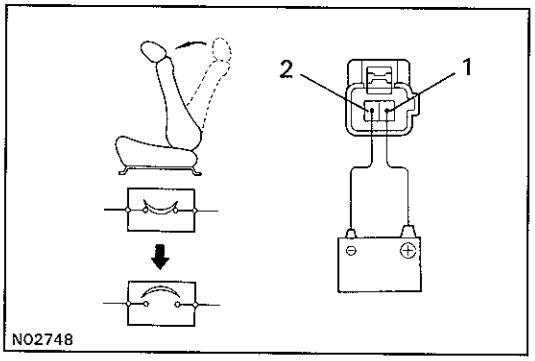

CIRCUIT BREAKER OPERATION DRIVER' S SEAT

(a) Connect the positive (+) lead from terminal 1 and negative (−) lead to terminal 2.
Check that the seat back reclines to the most forward position.

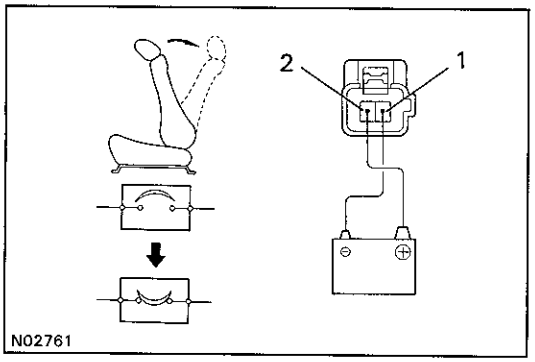

(b) Continue to apply voltage, check that there is a circuit breaker operation noise within 4 to 40 seconds.

(c) Reverse the polarity, check that the seat starts to fall backwards within approximately 60 seconds.

If operation is not as specified, replace the motor.

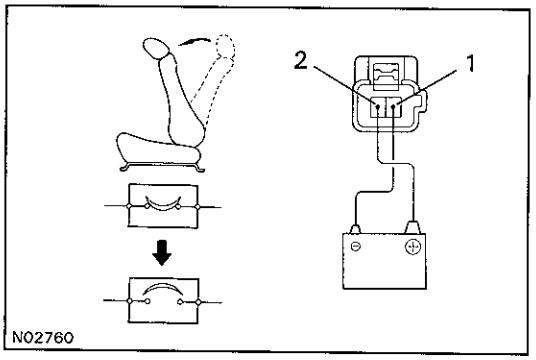

CIRCUIT BREAKER OPERATION PASSENGER'S SEAT

(a) Connect the positive (+) lead from the battery to terminal 2 and the negative (−) lead to terminal 1 on the seat wire harness side connector, and recline the seat back to the most forward position.

(b) Continue to apply voltage, check that there is a circuit breaker operation noise within 4 to 40 seconds.

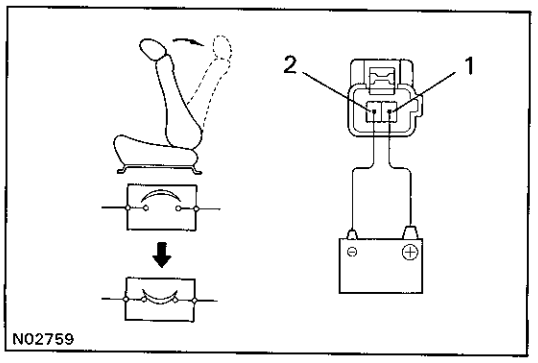

(c) Reverse the polarity, check that the seat back starts to fall backwards within approximately 60 seconds.

If operation is not as specified, replace the motor.

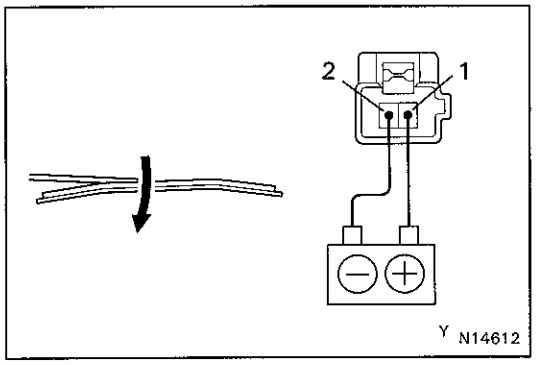

LUMBAR SUPPORT MOTOR INSPECTION

MOTOR OPERATION

(a) Connect the positive (+) lead from the battery to terminal 1 and the negative (−) lead to terminal 2, check that the lumbar support moves release side.

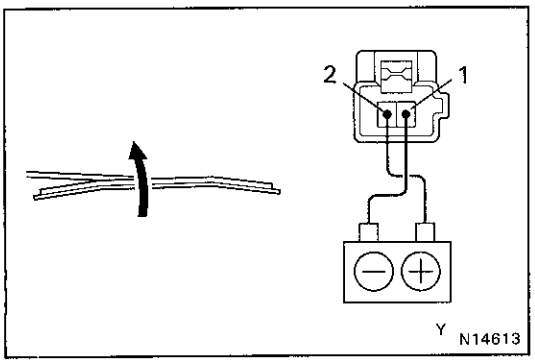

(b) Reverse the polarity, check that the lumbar support moves forward.

If operation is not as specified, replace the motor.

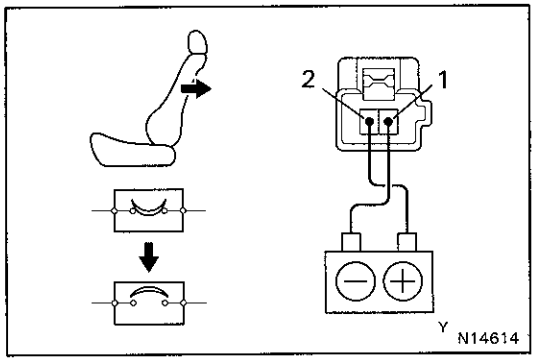

CIRCUIT BREAKER OPERATION

(a) Connect the positive (+) lead from the battery to terminal 2 and the negative (−) lead to terminal 1 on the lumbar support motor connector and move the lumbar support to front end position.

(b) Continue to apply voltage, check that there is a circuit breaker operation noise within 4 to 60 seconds.

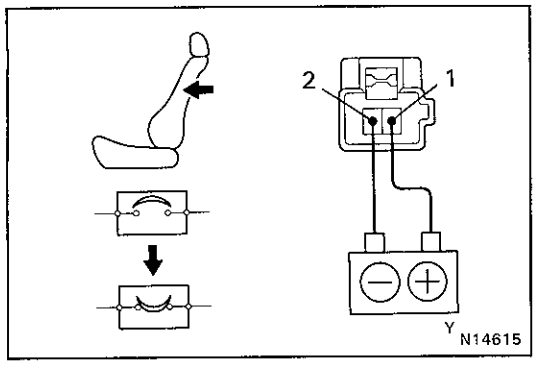

(c) Reverse the polarity, check that the lumbar support begins to move release side within approximately 60 seconds.

If operation is not as specified, replace the motor.