EXTRA (SUB) TANK SYSTEM

PARTS LOCATION

FZJ70 type

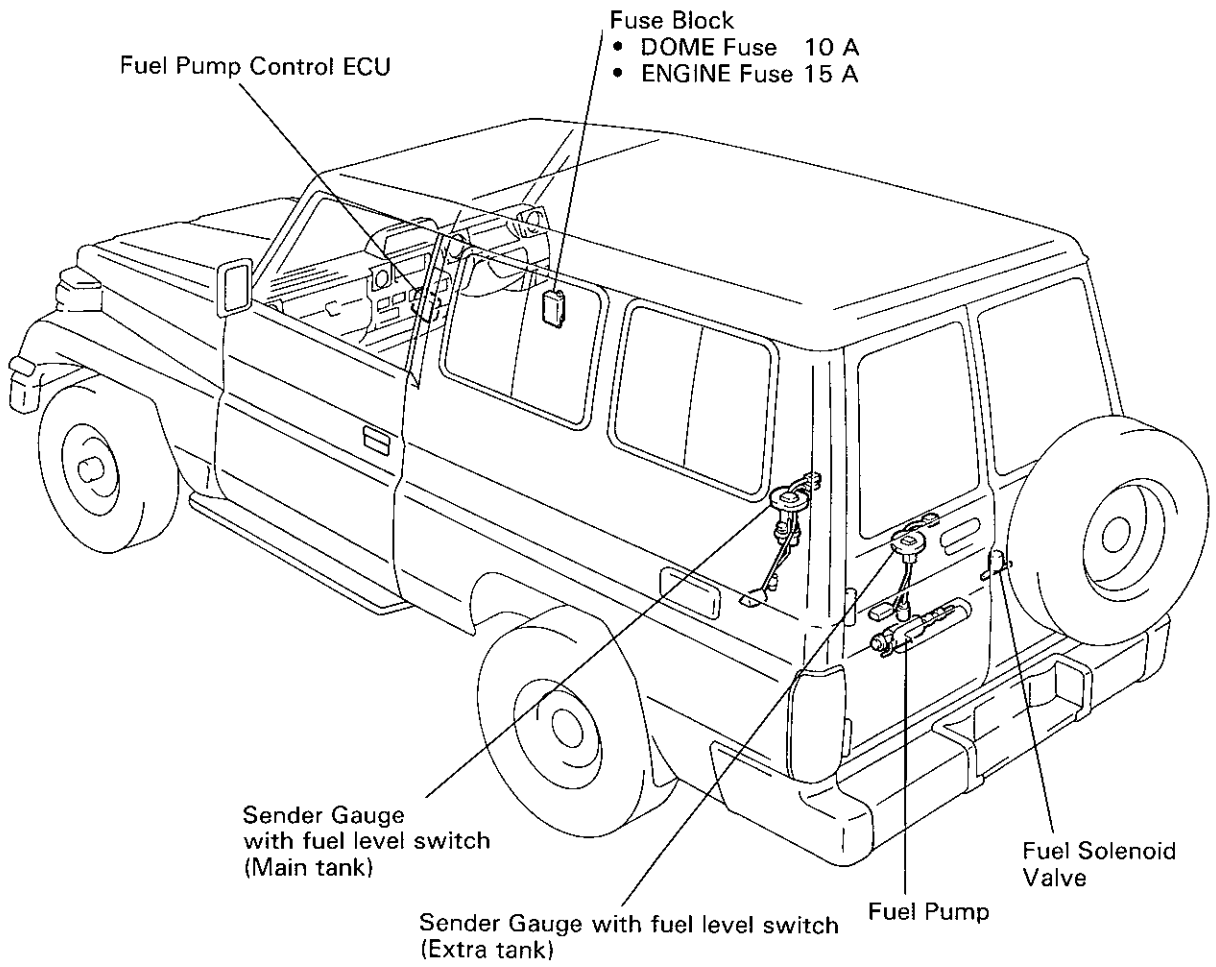

N06931

FZJ80 type

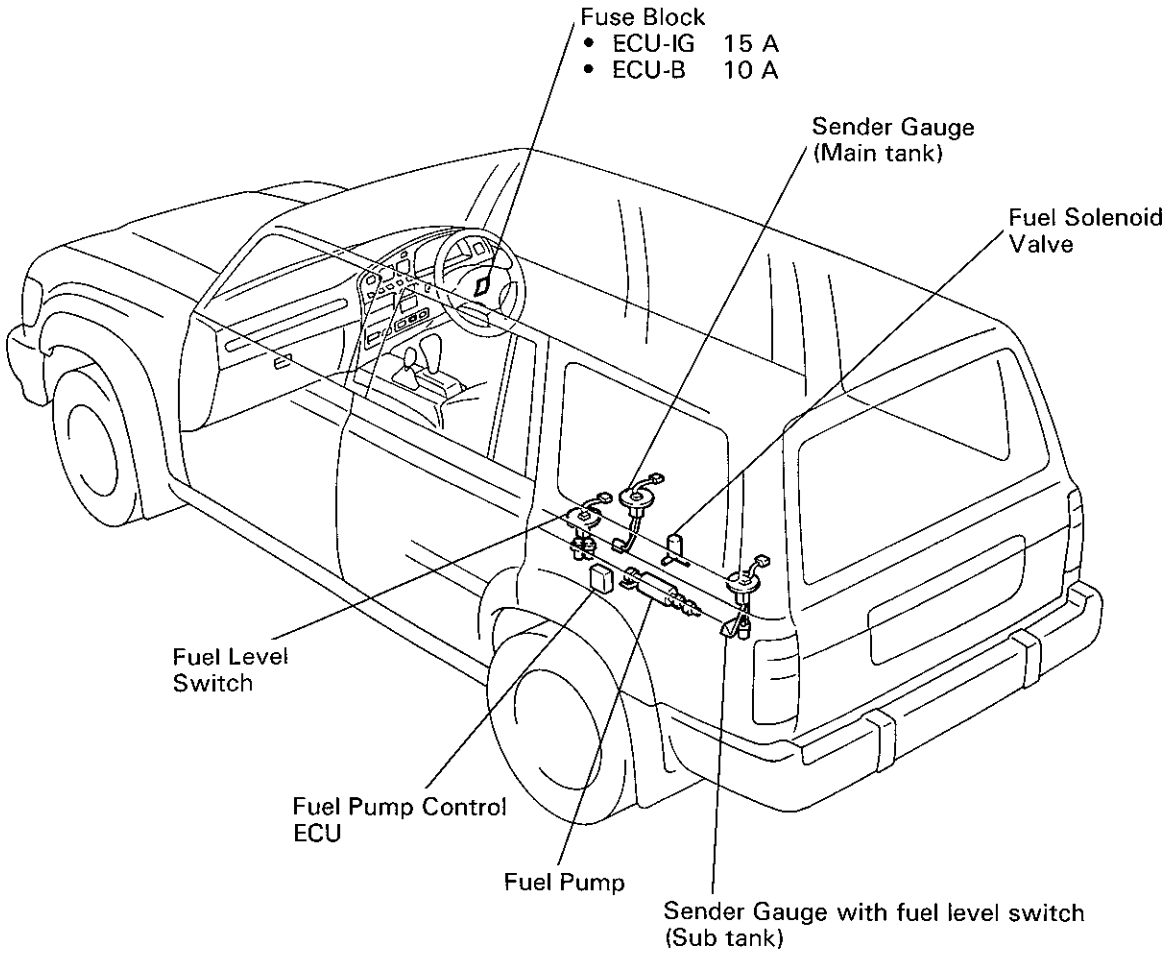

N06716

TROUBLESHOOTING

First use the diagnosis system to check for malfunctions. Repair any malfunctions found. Then check for malfunction in the parts shown in the table below.
The most likely causes of malfunction are shown in the order of their probability.
Inspect each part in the order shown, and replace the part when it is found to be faulty.

Trouble	Part name	See page
EXTRA (SUB) TANK system does not operate	1. Fuse FZJ70 type • DOME FUSE • ENGINE Fuse FZJ80 type • ECU-IG Fuse • ECU-B Fuse	—
	2. Fuel Pump	BE-53
	3. Sub Fuel Switch	BE-53
	4. Fuel Solenoid Valve	BE-55
	5. Fuel Level Switch (Main tank or Extra (sub) tank)	BE-54
	6. Sender Gauge	BE-54
	7. Fuel Pump Control ECU	BE-56
	8. Wire Harness	—

FZJ70 type

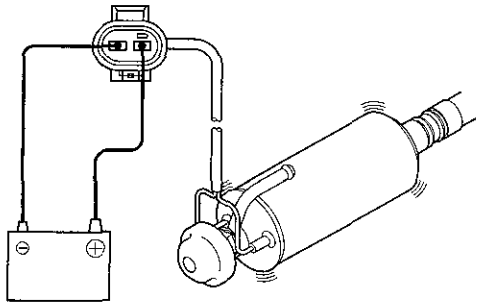

FZJ80 type

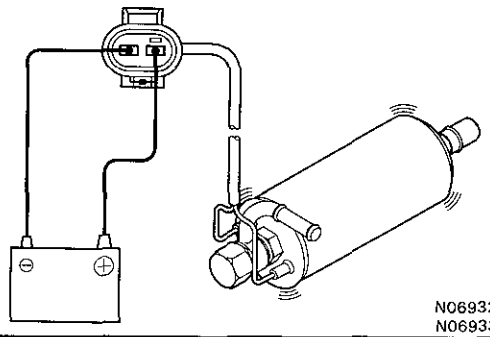

N06932
N06933

FUEL PUMP

INSPECT FUEL PUMP OPERATION

Connect the positive (+) lead from the battery to terminal 1 of the connector, and the negative (—) lead to terminal 2. Check that the fuel pump operates.

NOTICE:

- **These tests must be performed quickly (within 10 seconds) to prevent the coil from burning out.**
- **Keep the fuel pump as far away from the battery as possible.**
- **Always perform switching at the battery side.**

If operation is not as specified, replace the fuel pump.

FZJ70 type

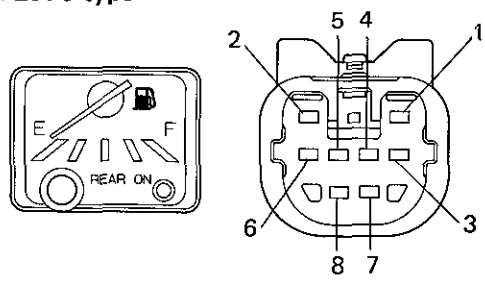

BE5310 N06934

SUB FUEL SWITCH

INSPECT SUB FUEL SWITCH

Terminal / SW Position	4	7	Illumination 1	Illumination 3
OFF				
ON	○	○	○	○

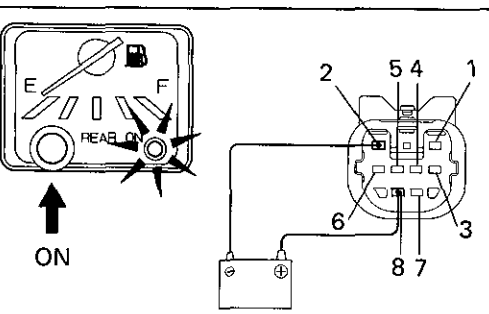

BE5311 N06935

INSPECT INDICATOR LIGHT

(a) Connect the positive (+) lead from the battery to terminal 8 and the negative (—) lead to terminal 2.

(b) Set the switch ON, check that the indicator light lights up.

If the indicator light does not light up, replace the accessory meter.

FZJ80 type

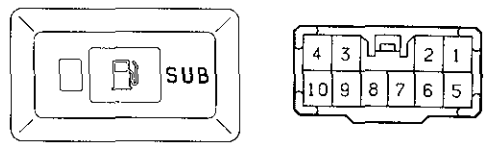

N06707 S-10-2

INSPECT SUB FUEL SWITCH

Terminal / SW Position	6	9	Illumination 1	Illumination 2	Illumination 3	Illumination 4
OFF						
ON	○	○	○	○	○	○

If continuity is not as specified, check the bulb or replace the switch.

FZJ70 type (Main Tank)

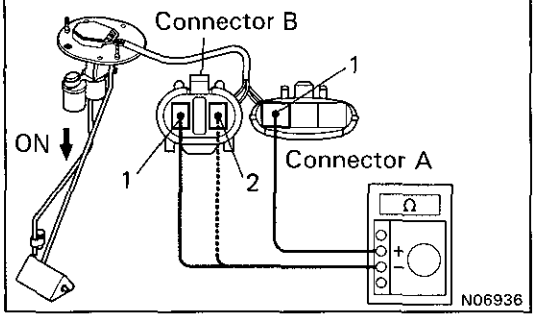

FZJ70 type (Extra Tank)

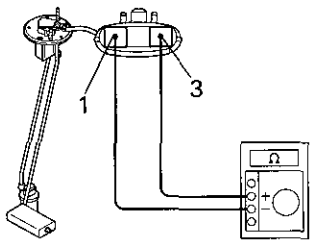

FZJ80type (Main Tank)

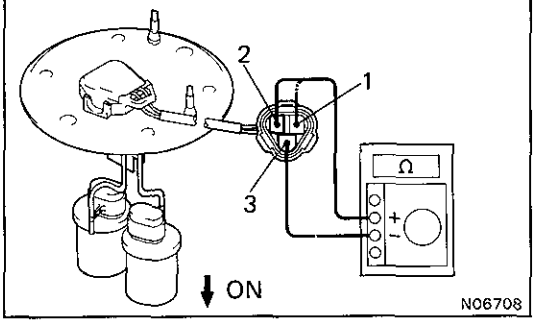

FZJ80 type (Sub Tank)

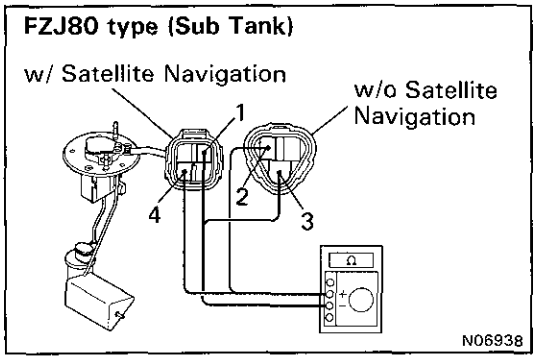

FUEL LEVEL SWITCH

INSPECT FUEL LEVEL SWITCH

(Continuity)

FZJ70 type (Main Tank)

Switch Position \ Terminal	Connector A	Connector B	
	1	1	2
ON (Float down)	○——	——○	
	○——		——○
OFF (Float up)			

FZJ70 type (Extra Tank)

Switch position \ Terminal	1	3
ON (Float down)	○——	——○
OFF (Float up)		

FZJ80 type (Main Tank)

Switch position \ Terminal	1	2	3
ON (Float down)	○——		——○
		○——	——○
OFF (Float up)			

FZJ80 type (Sub Tank)

Switch position \ Terminal	w/ Satellite Navigation		w/o Satellite Navigation	
	1	4	2	3
ON (Float down)	○——	——○	○——	——○
OFF (Float up)				

If continuity is not as specified, replace the switch.

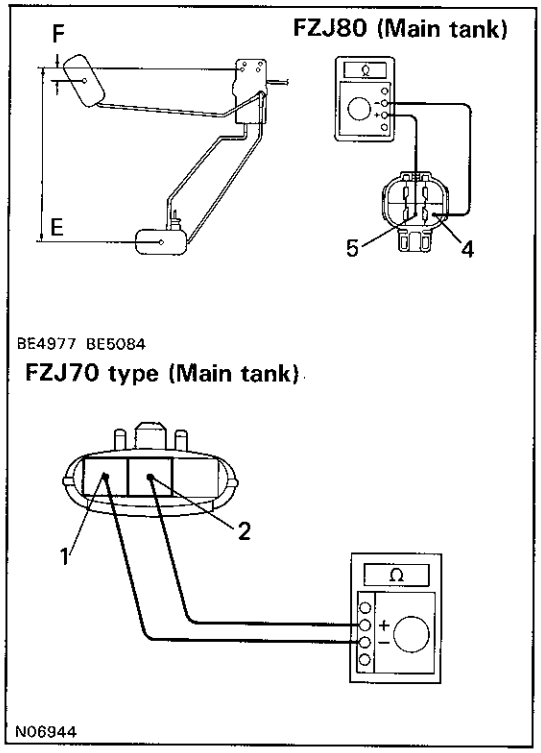

FUEL SENDER GAUGE

INSPECT FUEL SENDER GAUGE

Measure the resistance.

FZJ80 type (Main tank)

Float position mm (in.)	Resistance (Ω)
F approx. 15 (0.59)	approx. 3
E approx. 200 (7.87)	approx. 110

FZJ70 type (Main tank)

Float position mm (in.)	Resistance (Ω)
F approx. 39 (1.54)	approx. 3
E approx. 303 (11.93)	approx. 110

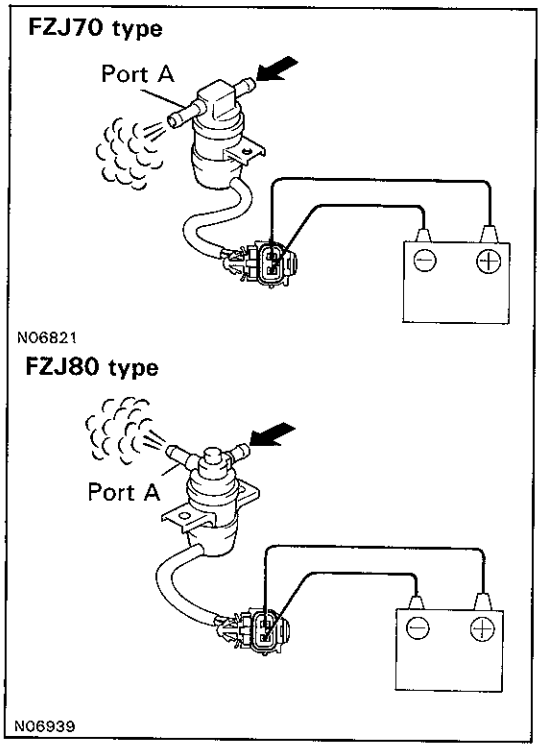

FUEL SOLENOID VALVE

INSPECT FUEL SOLENOID VALVE

1. Check that air flows out port A when battery voltage is applied across the terminals.
2. Check that air does not flow out port A when battery voltage is not applied across the terminal.

   Replace the valve if either test is not successful.

Wire Harness Side

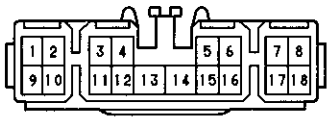

e-18-1

FUEL PUMP CONTROL ECU

FUEL PUMP CONTROL ECU INSPECTION

ECU CIRCUIT

Disconnect the connector from the ECU and inspect the connector on the wire harness side as shown in the chart.

Check for	Tester Connection	Condition		Specified value
Continuity	3 — Ground 11 — Ground	Main Tank Fuel Level	Full	No Continuity
			Below 3/4	Continuity
	6 — Ground	Constant		Continuity
	7 — Ground	Sub-Fuel Switch	OFF	No Continuity
			ON (Pushed)	Continuity
	13 — Ground	Sub Tank Fuel Level	Empty	Continuity
			above 1/4	No Continuity
	15 — Ground	Constant		No Continuity
		Terminals T_C and E_1 connected		Continuity
	16 — Ground	Constant		Continuity
	17 — Ground	Constant		Continuity
	18 — Ground	Constant		Continuity
	2 — Ground	Constant		Battery Voltage
	4 — Ground 5 — Ground	Ignition Switch Position	Lock or ACC	No Voltage
			ON	Battery Voltage
	10 — Ground	Ignition Switch Position	Lock or ACC	No Voltage
			ON	Battery Voltage
	12 — Ground	Ignition Switch: ON and Main Tank Fuel Level	Full	Below 1V
			Below 1/4	Above 3 V
	14 — Ground	Ignition Switch Position	ON	Approx 1 V
			ON (Engine running)	Battery Voltage

If circuit is as specified, try other ECU.

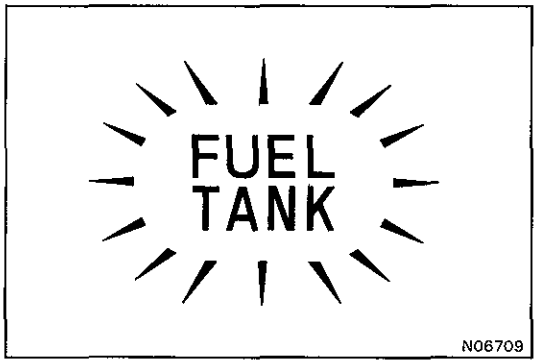

DIAGNOSIS SYSTEM

READ DIAGNOSTIC CODE

When there is a malfunction in the extra (sub) tank system, the warning light light up.

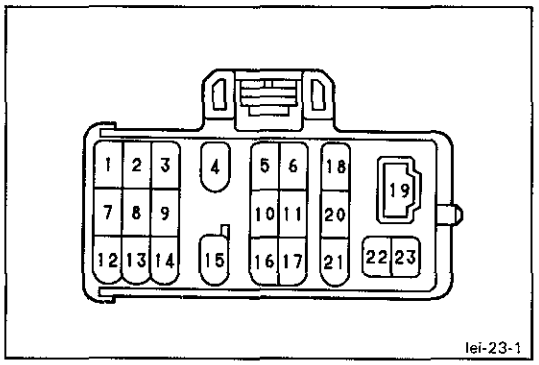

OUTPUT OF DIAGNOSTIC CODE

1. Turn the ignition switch ON.
2. Connect terminals T_C and E_1 of the check connector.
3. Read the diagnostic code from the warning light.

	Indication Code	Diagnosis
	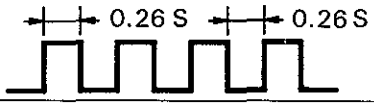 0.26 S 0.26 S N06713	Normal
2	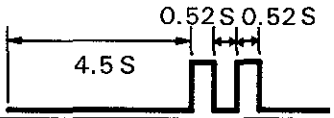 0.52 S 0.52 S 4.5 S N06746	• Fuel level switch malfunction (Main tank) • Open in switch circuit
3	 N06747	• Main tank sender gauge malfunction
4	 N06748	• Fuel pump malfunction • Open or short in pump circuit
5	 N06749	• Fuel solenoid valve malfunction • Open or short in solenoid valve circuit

Diagnostic code clearance

1. After completing repairs the diagnostic code retained in memory can be cleared by removing the battery terminal (−) for 10 seconds or more,with the ignition switch off.
2. Check that the normal code is displayed after connecting the battery terminal (−).

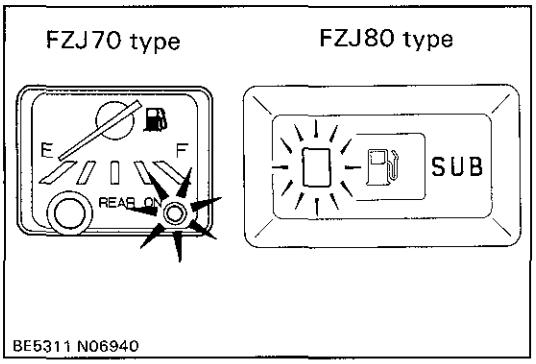

READ TEST CODE

The indicator light outputs the indication codes shown below in conformity with signals input or output by the extra (sub) tank system.

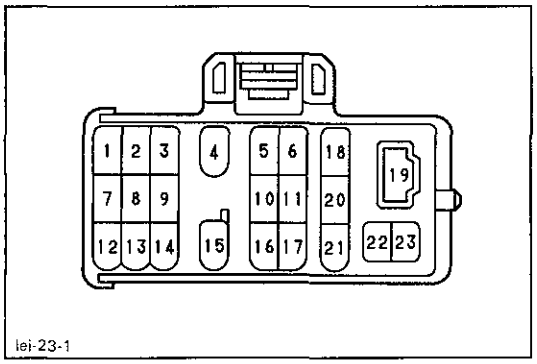

OUT PUT OF TEST CODE

1. Turn the ignition switch ON.
2. Connect terminals T_C and E_1 of the check connector.
3. Read the test code from the indicator light.

	Indication code	Condition indicated by signal input/output
2	0.52 S 0.52 S, 4.5 S — N06746	• Fuel level switch signal open or (Main tank) fuel level high.
3	N06747	• Fuel sender gauge signal open or fuel level high.
4	N06748	• Open or short in fuel pump circuit.
5	N06749	• Open or short in fuel solenoid valve circuit.
6	N06941	• Fuel level switch open or fuel level high. (Extra or sub tank)
–	N06713	• Condition other than the above.