SATELLITE NAVIGATION SYSTEM

PARTS LOCATION

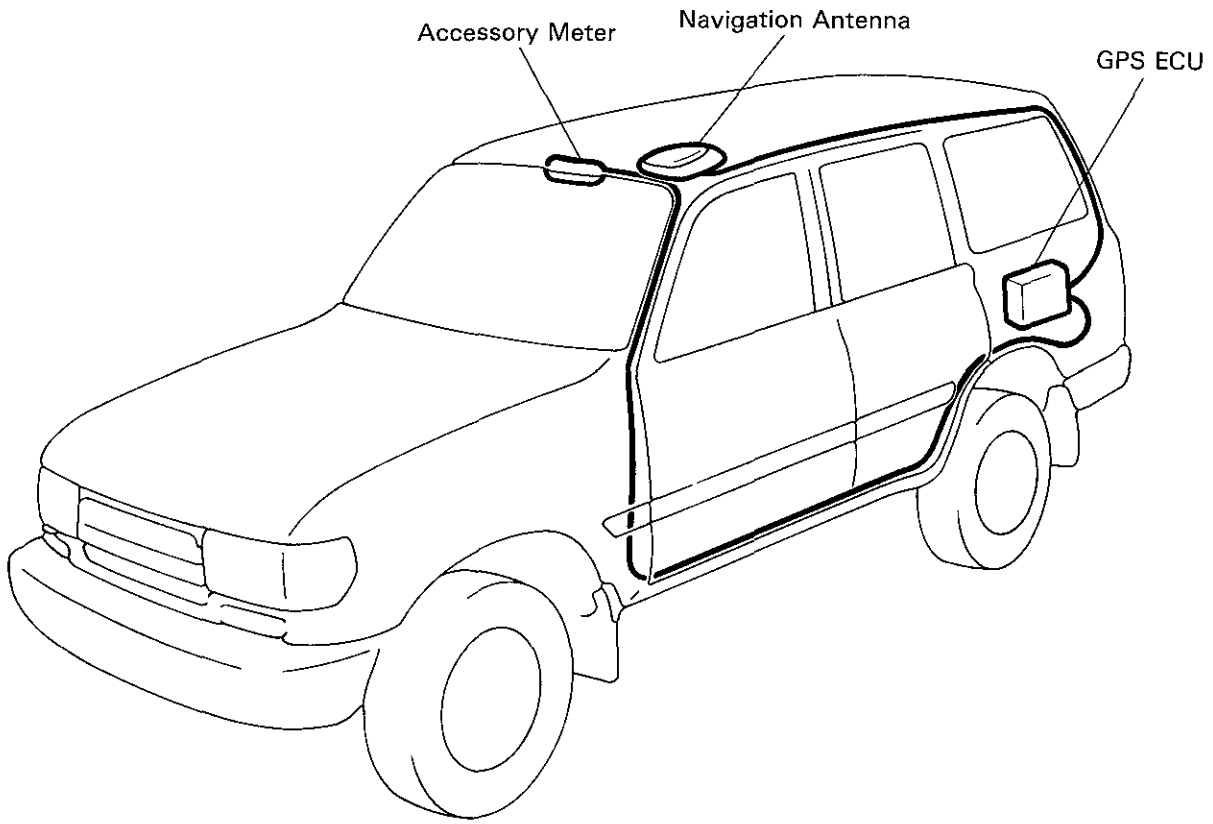

N06717

WIRING DIAGRAMS

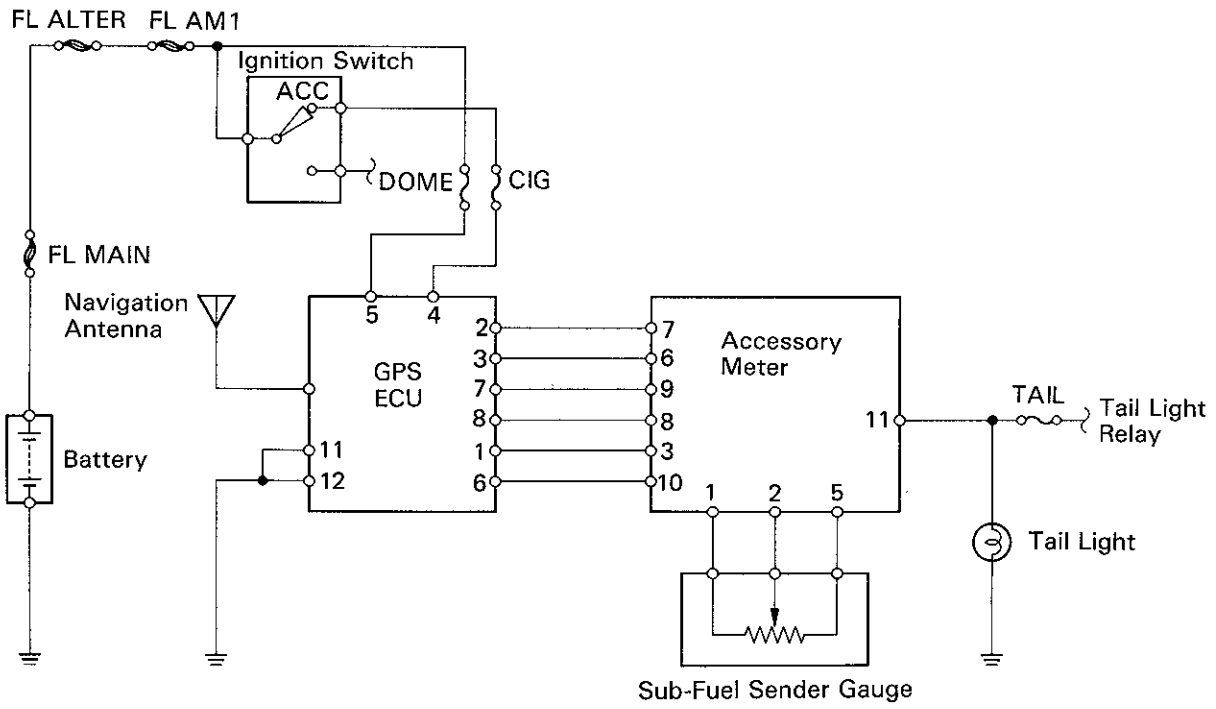

N06718

Display

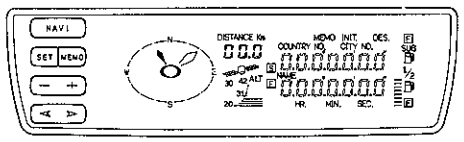

N06710

Display example



N06711

DIAGNOSIS SYSTEM

OUTPUT OF DIAGNOSTIC CODE

READ DIAGNOSTIC CODE

DO THE FOLLOWING STEPS TO READ DIAGNOSTIC CODE

(a) Turn the ignition switch ACC or ON.

(b) Push "NAVI" or "SET".

(c) Push "NAVI" and "SET" simultaneously for 5 seconds.

(d) Display the condition of each system on the screen.

If a malfunction code is displayed, check it again using other parts.

Display	Diagnosis
D_O E_O G_O W_O	Normal
D_1	• Display malfunction
E_1	• GPS ECU malfunction
G_1	• GPS antenna malfunction • Antenna cable faulty
W_1	• Malfunction in wire harness between GPS ECU and display.