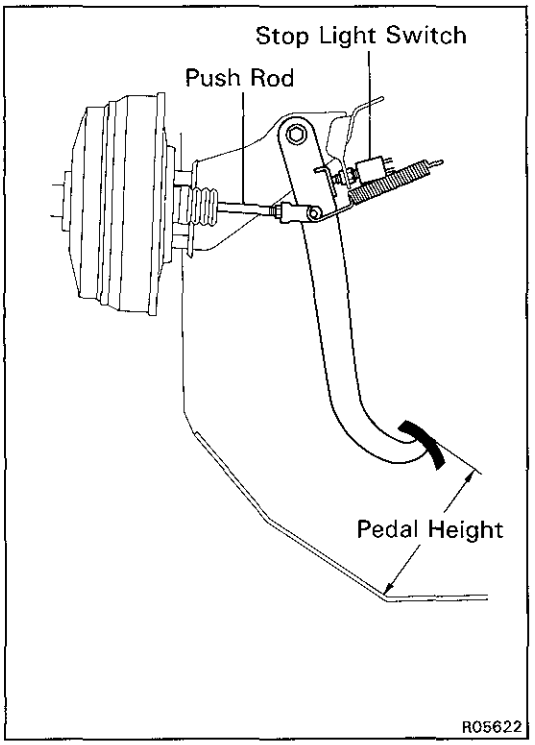

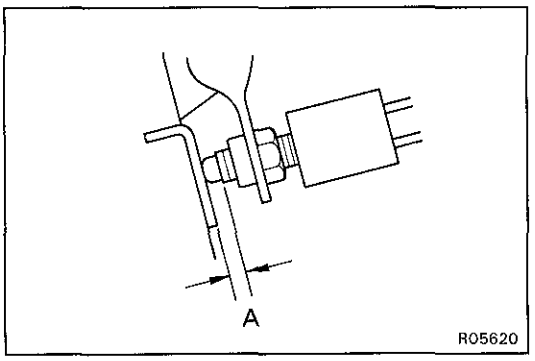

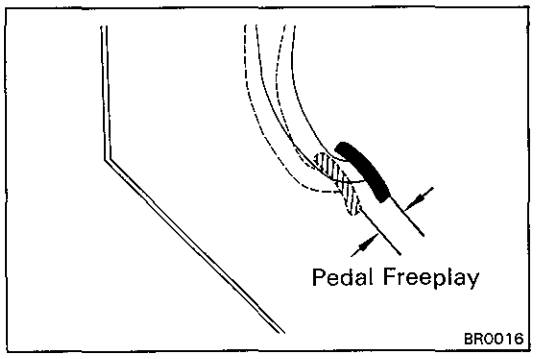

CHECK AND ADJUSTMENT

BRAKE PEDAL CHECK AND ADJUSTMENT

1. CHECK THAT PEDAL HEIGHT IS CORRECT, AS SHOWN

Pedal height from asphalt sheet:
167.5 – 177.5 mm (6.59 – 6.99 in.)

If the pedal height is incorrect, adjust it.

2. IF NECESSARY, ADJUST PEDAL HEIGHT

(a) Disconnect the connector from the stop light switch.

(b) Loosen the stop light switch lock nut and remove the stop light switch.

(c) Loosen the push rod lock nut.

(d) Adjust the pedal height by turning the pedal push rod.

(e) Tighten the push rod lock nut.

Torque: 25 N·m (260 kgf·cm, 19 ft·lbf)

(f) *Install the stop light switch and turn it until it lightly contacts the pedal stopper.*

(g) Return the stop light switch one turn.

(h) Check clearance (A) between the stop light switch and pedal.

Clearance:
0.5 – 2.4 mm (0.02 – 0.09 in.)

(i) Tighten the stop light switch lock nut.

(j) Connect the connector to the stop light switch.

(k) Check that the stop lights come on when the brake pedal is depressed, and go off when the brake pedal is released.

(l) After adjusting the pedal height, check the pedal freeplay.

HINT: If clearance (A) between the stop light switch *and the brake pedal stopper has been adjusted correctly,* the pedal freeplay will meet the specifications.

3. CHECK THAT PEDAL FREEPLAY IS CORRECT, AS SHOWN

(a) Stop the engine and depress the brake pedal several times until there is no more vacuum left in the booster.

(b) Push in the pedal by hand until the beginning of the resistance is felt, then measure the distance, as shown.

Pedal freeplay:
3 – 6 mm (0.12 – 0.24 in.)

HINT: The freeplay to the first point of resistance is due to the play between the clevis and pin. It is 3 – 6 mm (0.12 – 0.24 in.) on the pedal.

If incorrect, check the stop light switch clearance. And if the clearance is OK, then troubleshoot the brake system.

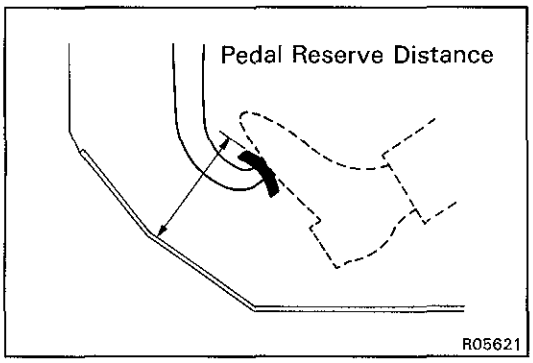

4. CHECK THAT PEDAL RESERVE DISTANCE IS CORRECT, AS SHOWN

Release the parking brake.

With the engine running, depress the pedal and measure the pedal reserve distance, as shown.

Pedal reserve distance from asphalt sheet at 490 N (50 kgf, 110.2 lbf):

More than 68 mm (2.68 in.)

If the reserve distance is incorrect, troubleshoot the brake system.