MASTER CYLINDER

MASTER CYLINDER REMOVAL

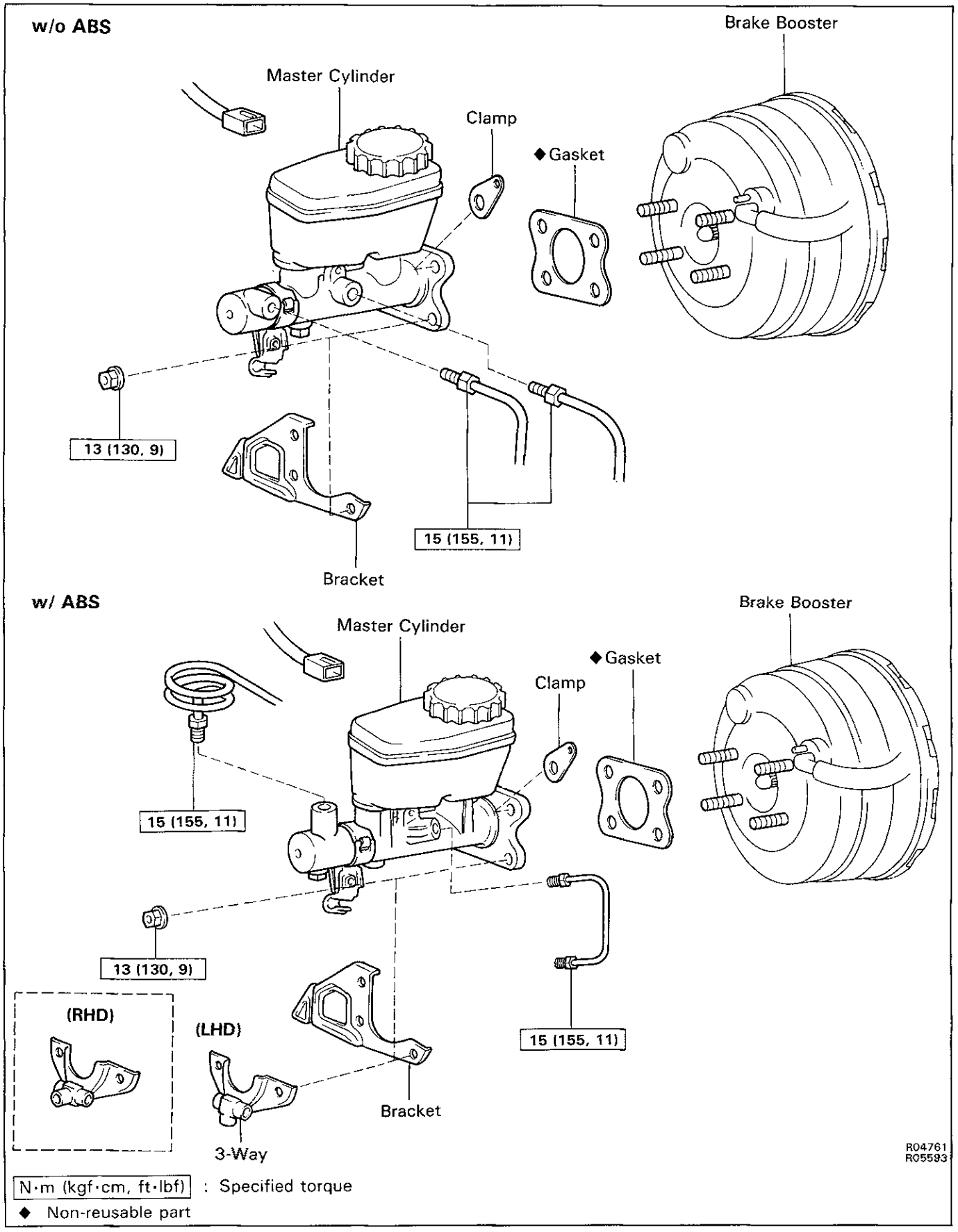

N·m (kgf·cm, ft·lbf) : Specified torque

◆ Non-reusable part

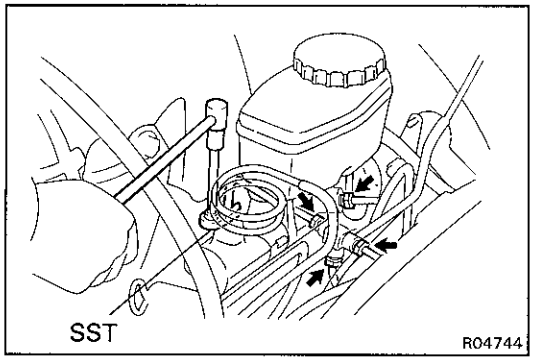

1. DISCONNECT LEVEL WARNING SWITCH CONNECTOR

2. TAKE OUT FLUID WITH SYRINGE

NOTICE: Do not let brake fluid remain on a painted surface. Wash it off immediately.

3. DISCONNECT BRAKE LINES

Using SST, disconnect brake lines from the master cylinder.
SST 09023-00100

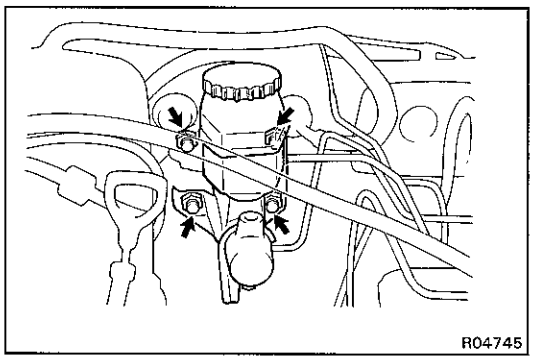

4. REMOVE MASTER CYLINDER

(a) Remove the mounting nuts.

(b) (w/ ABS)
Remove the 3-way, clamp and the bracket.

(w/o ABS)
Remove the clamp and the bracket.

(c) Pull out the master cylinder and gasket.

COMPONENTS

w/o ABS

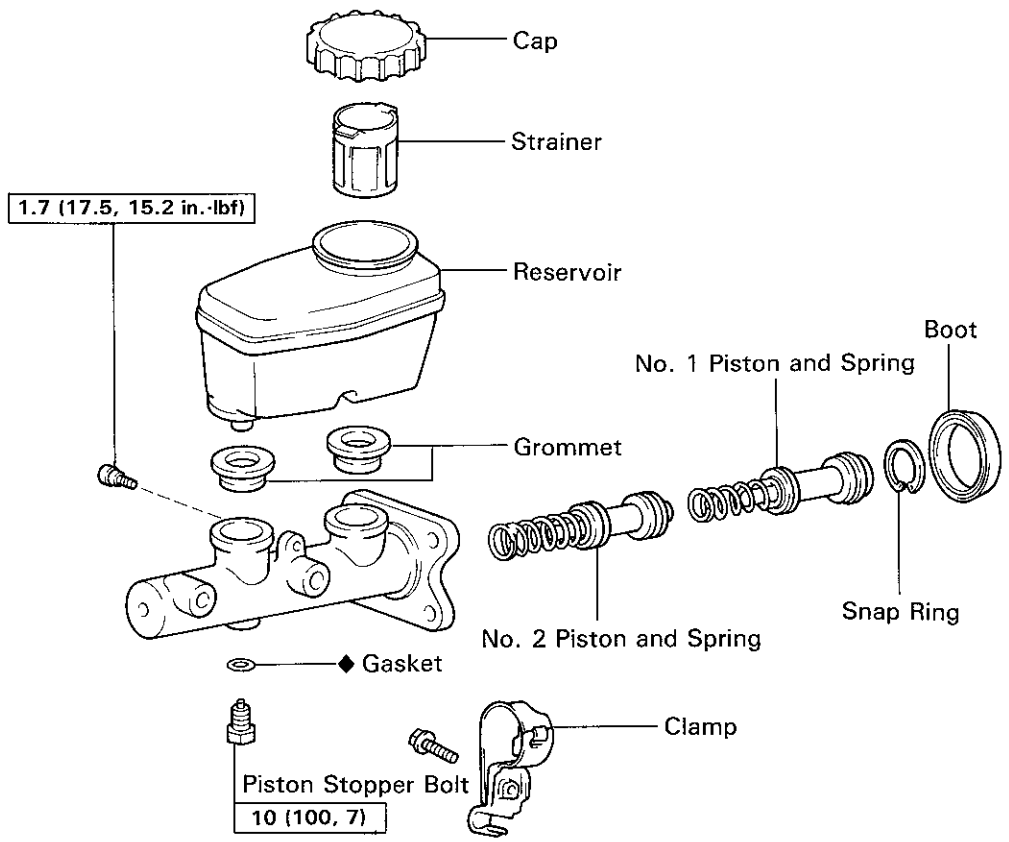

w/ ABS

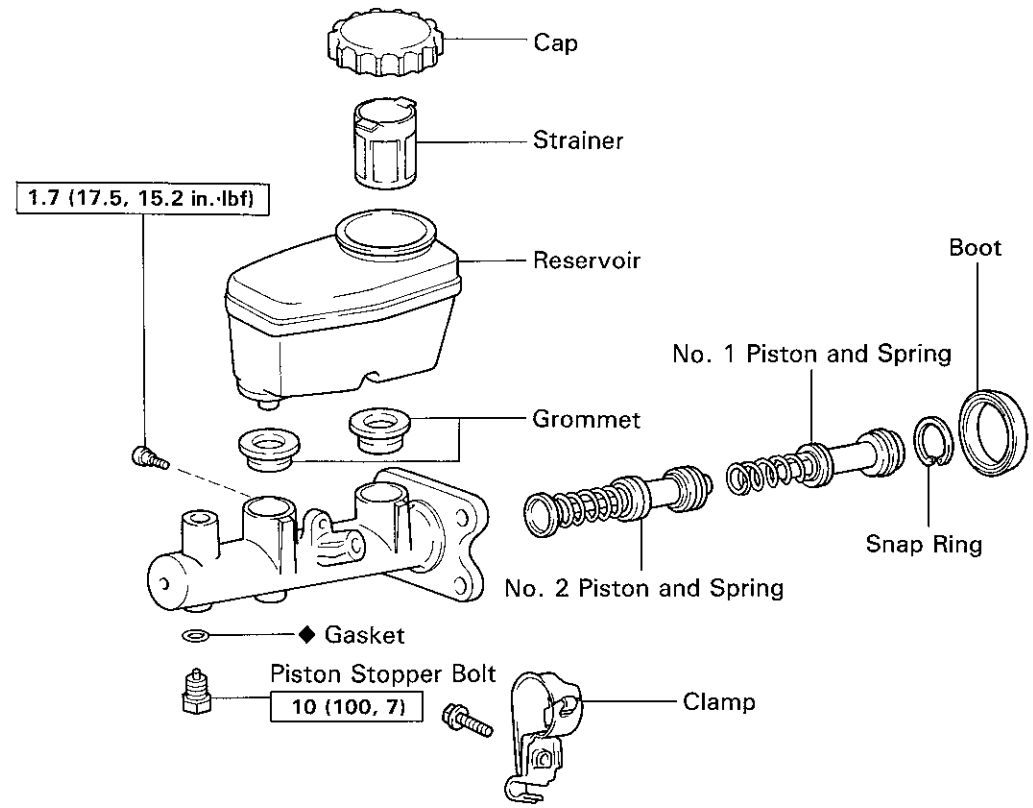

R04763
R04764

N·m (kgf·cm, ft·lbf) : Specified torque

◆ Non-reusable part

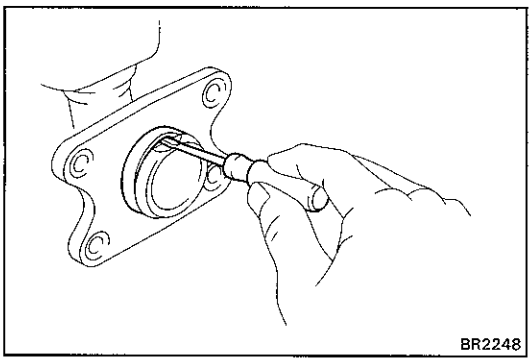
BR2248

MASTER CYLINDER DISASSEMBLY

1. **REMOVE MASTER CYLINDER BOOT**

Using a screwdriver, remove the master cylinder boot.

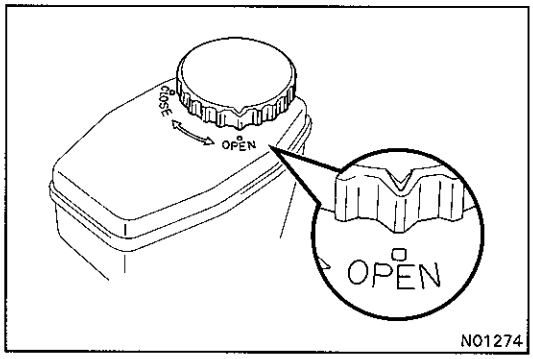

N01274

2. **REMOVE RESERVOIR CAP AND STRAINER**

(a) Turn the reservoir cap to the "OPEN" side and remove it.

(b) Remove the strainer.

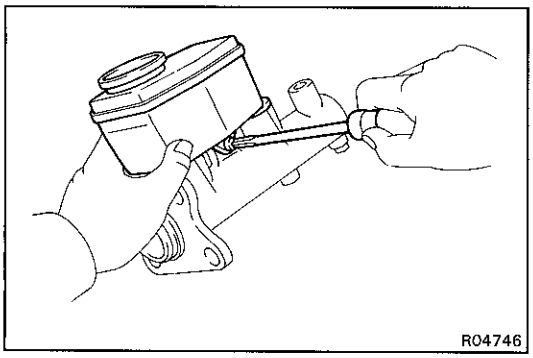
R04746

3. **REMOVE RESERVOIR**

Remove the set screw and pull out the reservoir.

4. **REMOVE TWO GROMMETS**

5. **PLACE CYLINDER IN VISE**

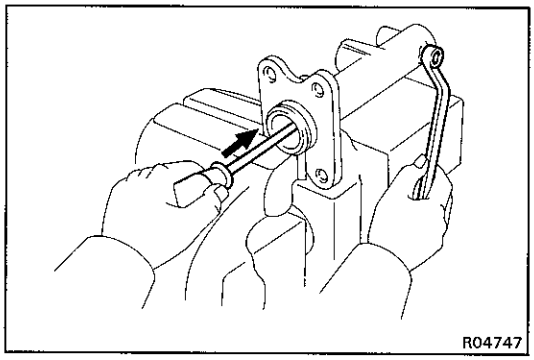
R04747

6. **REMOVE NO.2 PISTON STOPPER BOLT**

Using a screwdriver, push the pistons in all the way and remove the No.2 piston stopper bolt and gasket.

HINT: Tape the screwdriver tip before use.

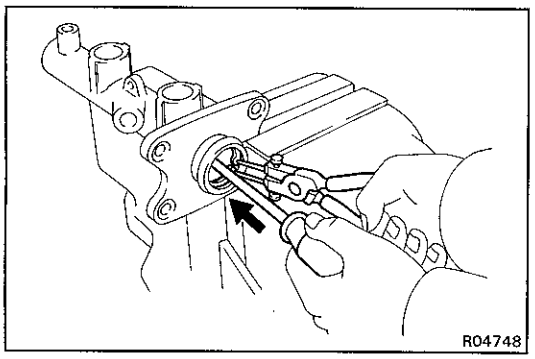
R04748

7. **REMOVE TWO PISTONS**

(a) Push in the piston with a screwdriver and remove the snap ring with snap ring pliers.

(b) Remove the No.1 piston and spring by hand, pulling straight out, not at an angle.

NOTICE: If pulled out at an angle, there is a possibility that the cylinder bore could be damaged.

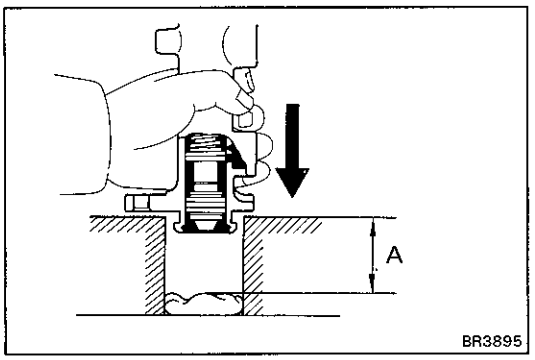

(c) Place a rag and two wooden blocks on the work table and lightly tap the cylinder flange against the blocks until the piston drops out of the cylinder.

HINT: Make sure the distance (A) from the rag to the top of the blocks is at least 100 mm (3.94 in.).

MASTER CYLINDER INSPECTION

HINT: Clean the disassembled parts with compressed air.

1. **INSPECT CYLINDER BORE FOR RUST OR SCORING**
2. **INSPECT CYLINDER FOR WEAR OR DAMAGE**

If necessary, clean or replace the cylinder.

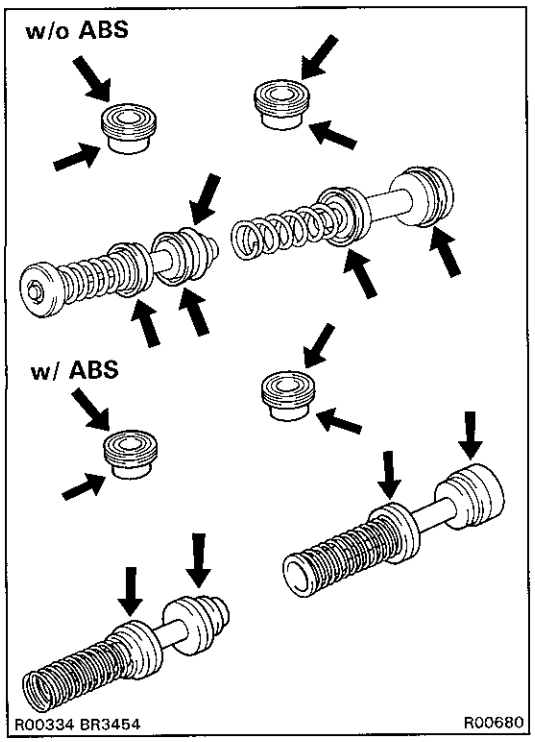

MASTER CYLINDER ASSEMBLY

1. **APPLY LITHIUM SOAP BASE GLYCOL GREASE TO RUBBER PARTS INDICATED BY ARROWS**

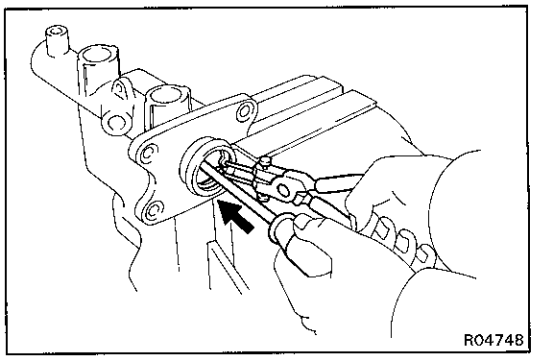

2. **INSTALL TWO PISTONS**

NOTICE: Be careful not to damage the rubber lips on the pistons.

(a) Install the two springs and pistons straight in, not at an angle.

NOTICE: If insert at an angle, there is a possibility of damaging the cylinder bore.

(b) Push in the piston with a screwdriver and install the snap ring with snap ring pliers.

HINT: Tape the screwdriver tip before use.

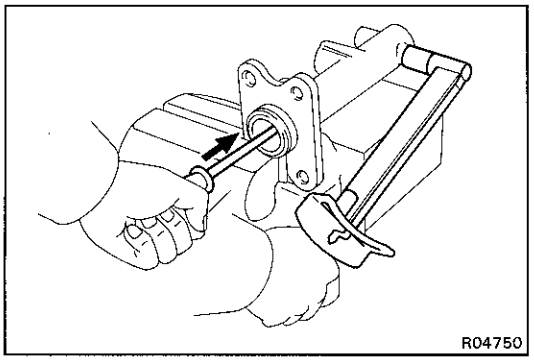

3. INSTALL NO.2 PISTON STOPPER BOLT

Using a screwdriver, push the piston in all the way and install the No.2 piston stopper bolt over a new gasket.

Torque: 10 N·m (100 kgf·cm, 7 ft·lbf)

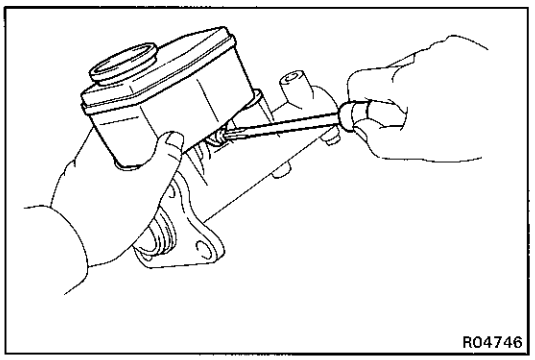

4. INSTALL TWO GROMMETS

5. INSTALL RESERVOIR

(a) Install the strainer to the reservoir.

(b) Push the reservoir onto the cylinder.

(c) Install the set screw while pushing on the reservoir.

Torque: 1.7 N·m (17.5 kgf·cm, 15.2 in.·lbf)

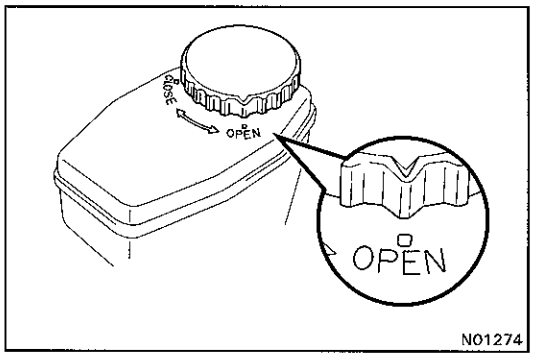

6. INSTALL RESERVOIR CAP

(a) Align the matchmark on the reservoir cap with the matchmark on the "OPEN" side of reservoir.

(b) Push down on the reservoir cap and turn it clockwise until it locks.

(c) Check that the matchmark on the reservoir cap is now aligned with the matchmark on the "CLOSE" side of the reservoir.

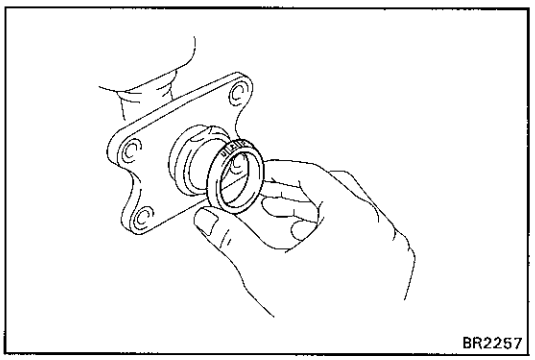

7. INSTALL MASTER CYLINDER BOOT

With the UP mark on the master cylinder boot facing upwards, install the cylinder boot on the master cylinder.

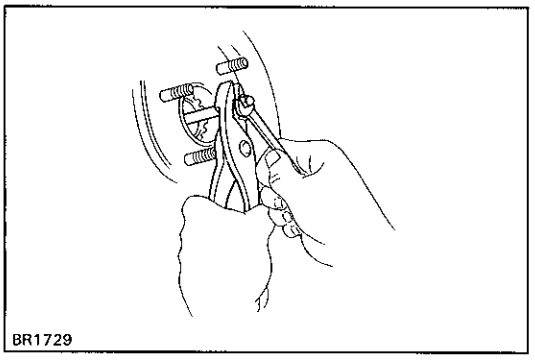

MASTER CYLINDER INSTALLATION

1. ADJUST LENGTH OF BRAKE BOOSTER PUSH ROD BEFORE INSTALLING MASTER CYLINDER
(See pub. No. RM184E, page BR-26)

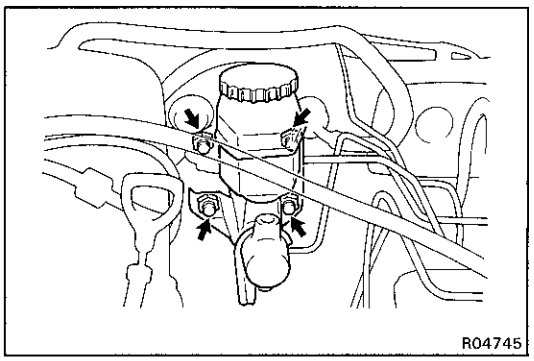

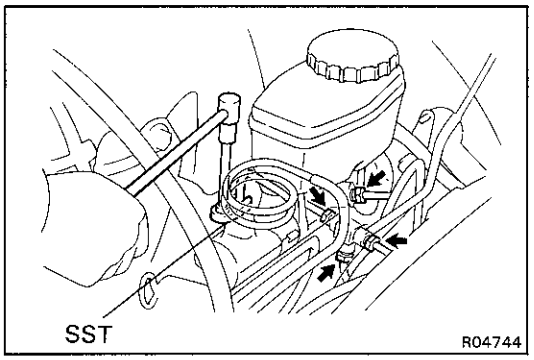

2. INSTALL MASTER CYLINDER

(a) (w/ ABS)
Install the master cylinder, gasket, 3-way, clamp and bracket on the brake booster with the four nuts.

(w/o ABS)
Install the master cylinder, gasket, clamp and bracket on the brake booster with the four nuts.

(b) Tighten the mounting nuts.

Torque: 13 N·m (130 kgf·cm, 9 ft·lbf)

3. CONNECT BRAKE LINES

Using SST, connect the brake lines to the master cylinder. Torque the union nuts.

SST 09023-00100

Torque: 15 N·m (155 kgf·cm, 11 ft·lbf)

4. CONNECT LEVEL WARNING SWITCH CONNECTOR

5. FILL BRAKE RESERVOIR WITH BRAKE FLUID AND BLEED BRAKE SYSTEM
(See pub No. RM184E, page BR-7)

6. CHECK FOR LEAKS

7. CHECK AND ADJUST BRAKE PEDAL
(See page BR-4)