LOAD SENSING PROPORTIONING AND BY-PASS VALVE (LSP & BV)

COMPONENTS

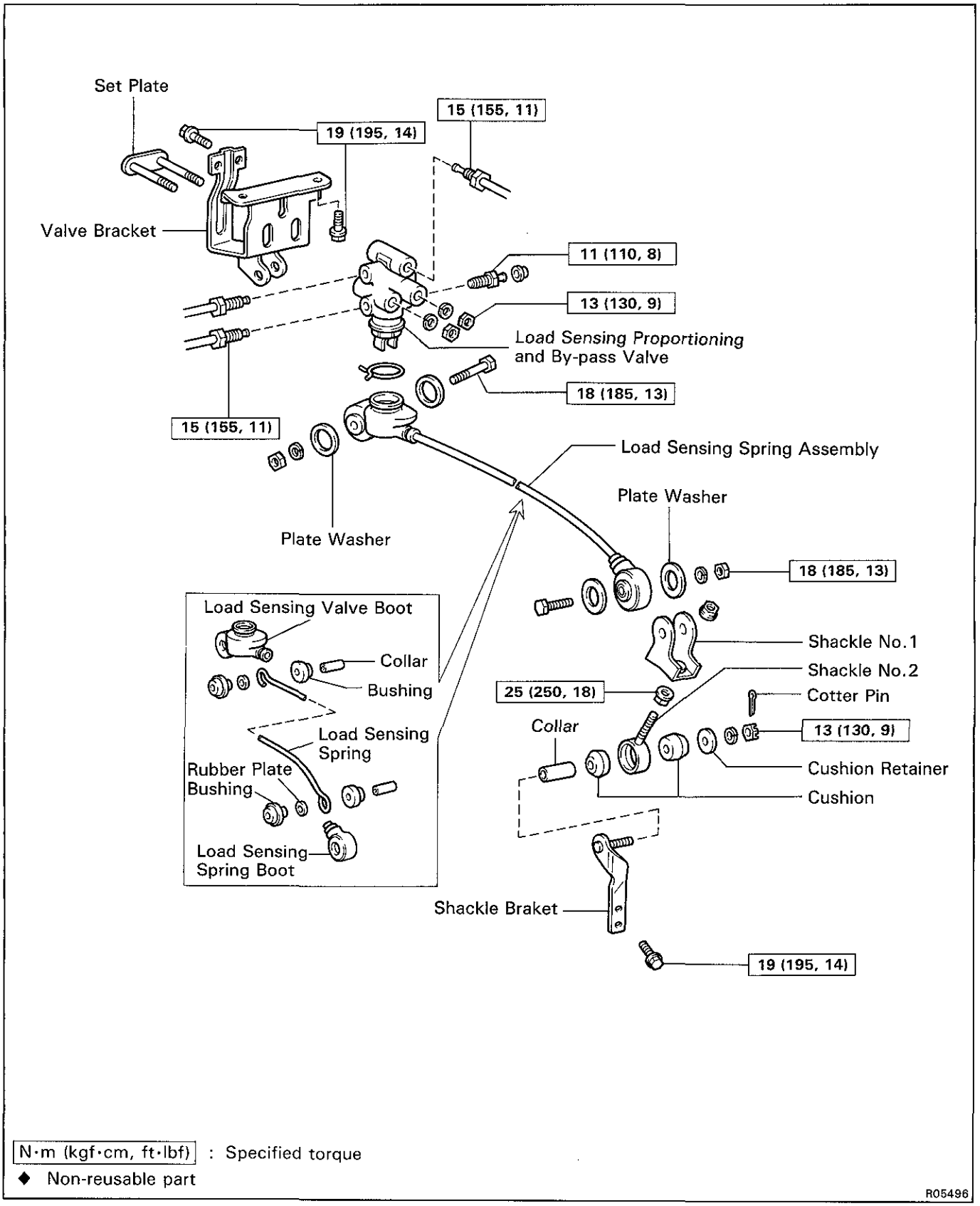

N·m (kgf·cm, ft·lbf) : Specified torque

◆ Non-reusable part

R05496

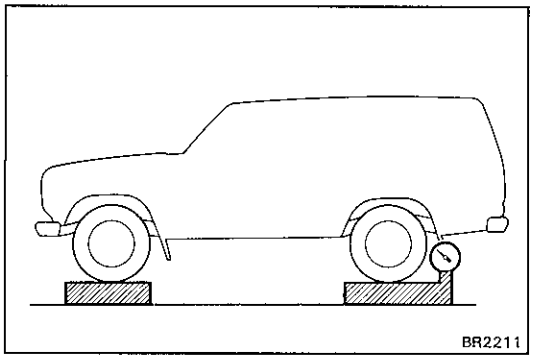

FLUID PRESSURE CHECK AND ADJUSTMENT

1. SET REAR AXLE LOAD

Rear axle load (include vehicle weight):
1,330 kg (2,932 lb)

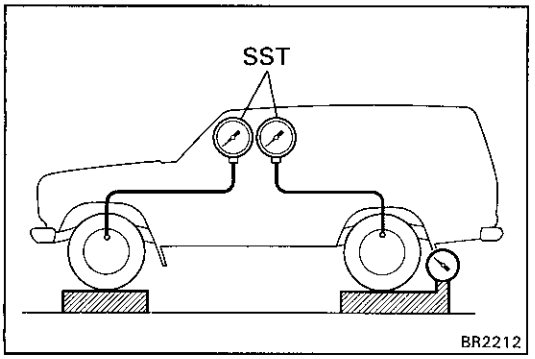

2. INSTALL LSPV GAUGE (SST) AND BLEED AIR

SST 09709-29017

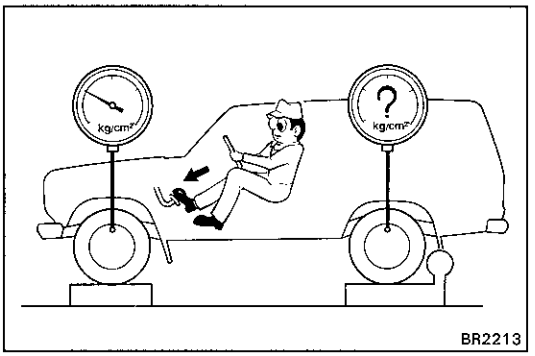

3. RAISE FRONT BRAKE PRESSURE TO 7,845 kPa (80 kgf/cm², 1,138 psi) AND CHECK REAR BRAKE PRESSURE

Rear brake pressure:
5,984 ± 589 kPa (61 ± 6 kgf/cm², 869 ± 86 psi)

HINT: The brake pedal should not be depressed twice and/or returned while setting to the specified pressure. Read the value of rear pressure two seconds after adjusting the specified fluid pressure.

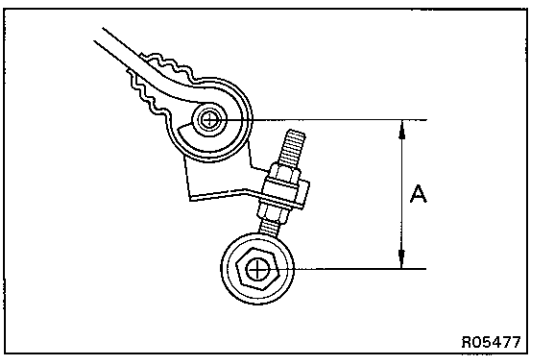

4. IF NECESSARY, ADJUST FLUID PRESSURE

(a) Disconnect the No.2 shackle from the shackle bracket.

(b) Adjust the length of the No.2 shackle turning it.

Low pressure — Lengthen A
High pressure — Shorten A

Initial set:
90 mm (3.54 in.)

Adjusting range:
84 — 96 mm (3.31 — 3.78 in.)

HINT: One turn of the No.2 shackle changes the fluid pressure about following specification.

98.1 kPa (1.0 kgf/cm², 14.2 psi)

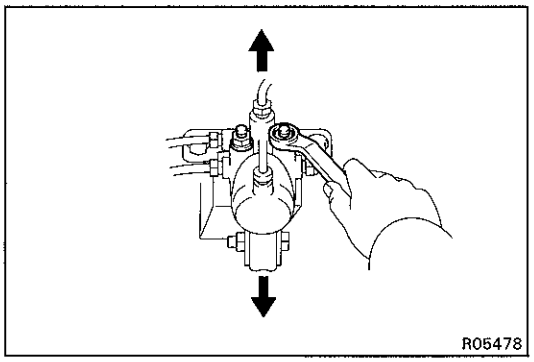

(c) In event the pressure cannot be adjusted by No.2 shackle, raise or lower the valve body.

Low pressure — Lower
High pressure — Raise

(d) Torque the nuts.

Torque: 13 N·m (130 kgf·cm, 9 ft·lbf)

(e) Adjust the length of the No.2 shackle again.

If it cannot be adjusted, inspect the valve housing.

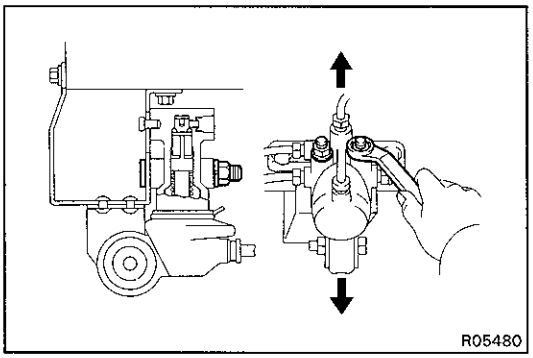

5. IF NECESSARY, CHECK VALVE BODY

(a) Assemble the valve body in the uppermost position.

HINT: When the brakes are applied, the piston will move down about 1 mm (0.039 in.). Even at this time, the piston should not make contact with or move the load sensing spring.

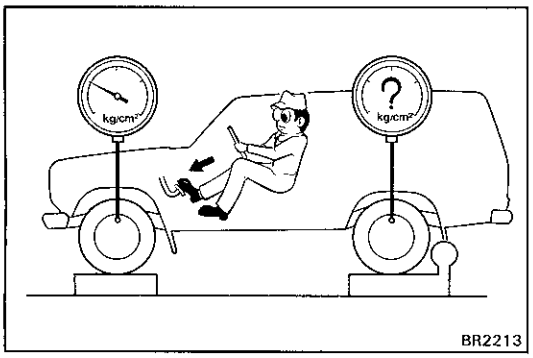

(b) In this position, check the rear brake pressure.

Front brake pressure kPa (kgf/cm², psi)	Rear brake pressure kPa (kgf/cm², psi)
3,434 (35, 498)	3,434 (35, 498)
5,396 (55, 783)	3,630 — 4,218 (37 — 43, 527 — 612)
9,810 (100, 1,424)	4,513 — 5,494 (46 — 56, 655 — 797)

LSP & BV REMOVAL

1. DISCONNECT SHACKLE NO.2 FROM BRACKET

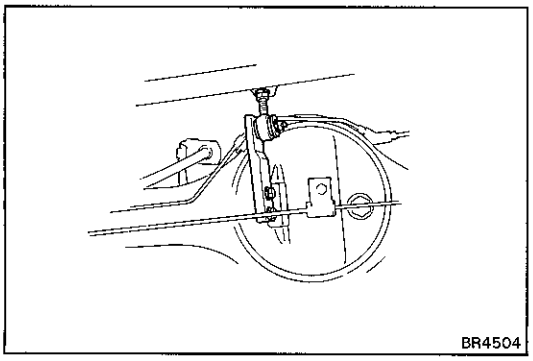

(a) Remove the cotter pin.

(b) Remove the nut and disconnect the shackle No.2 from the bracket.

(c) Remove the retainer, two cushions and collar.

2. REMOVE LSP & BV ASSEMBLY

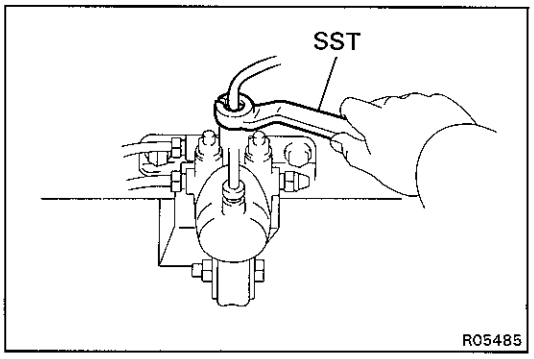

(a) Using SST, disconnect the brake lines from the valve body.

SST 09751-36011

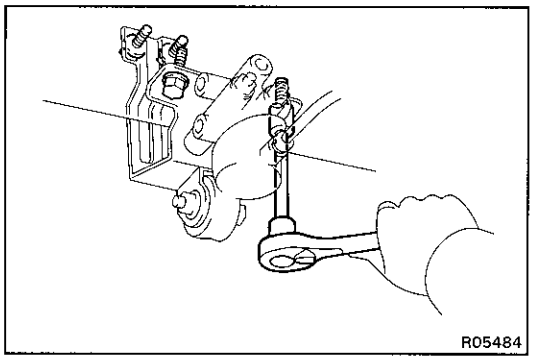

(b) Remove the valve bracket and mounting bolts, then remove the LSP & BV assembly.

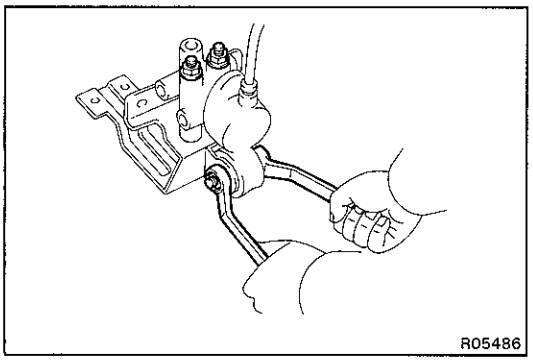

LSP & BV ASSEMBLY DISASSEMBLY

1. REMOVE VALVE BRACKET

(a) Remove the nut and bolt as shown.

(b) Remove the two nuts, and remove the bracket and two bolts from the valve body.

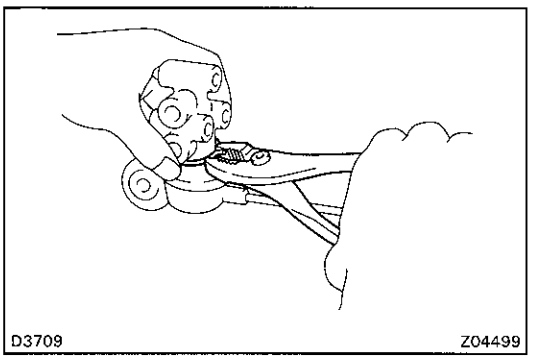

2. DISCONNECT SPRING FROM VALVE

Using pliers, remove the clip, and remove the spring from the valve.

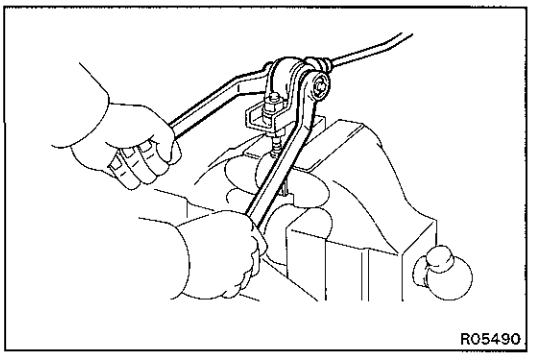

3. REMOVE SHACKLE NO.1 AND NO.2

(a) Remove the bolt and nut, then remove the following parts:
- Load sensing spring
- Two plate washers

(b) Loosen the two nuts, and remove the shackle No.1 from the shackle No.2.

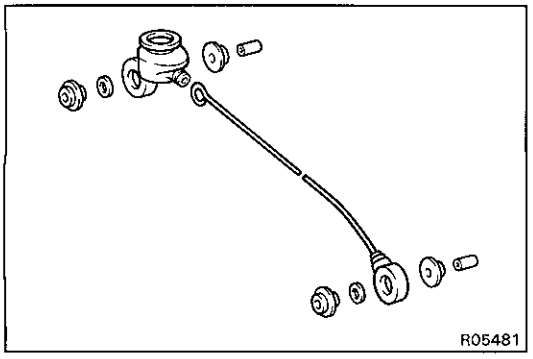

4. DISASSEMBLY LOAD SENSING SPRING

Disassembly the following parts:

(a) Bushings

(b) Collars

(c) Rubber plates

(d) Load sensing valve boot

(e) Load sensing spring boot

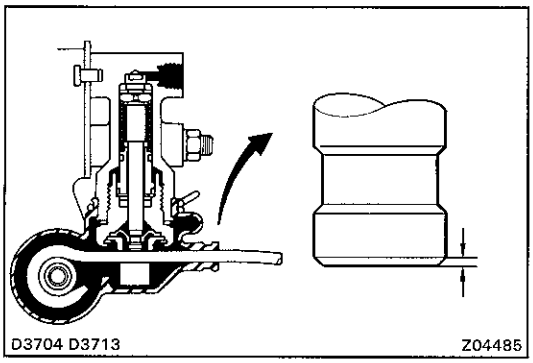

LSP & BV INSPECTION

INSPECT VALVE PISTON PIN AND LOAD SENSING SPRING CONTACT SURFACE FOR WEAR

Wear limit:
0.7 mm (0.028 in.)

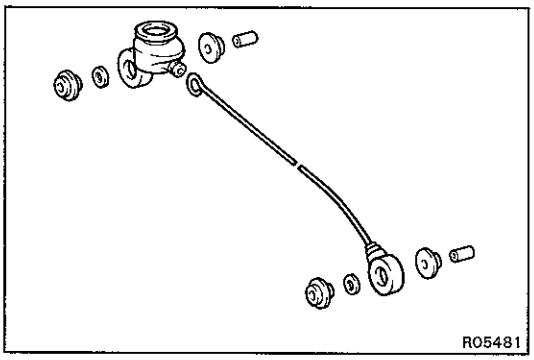

LSP & BV ASSEMBLY

1. **ASSEMBLE FOLLOWING PARTS TO LOAD SENSING SPRING:**

(a) Load sensing valve boot

(b) Load sensing spring boot

(c) Bushings

(d) Rubber plates

(e) Collars

HINT: Apply lithium soap base glycol grease to all rubbing areas.

Do not mistake the valve side for the shackle side of the load sensing spring.

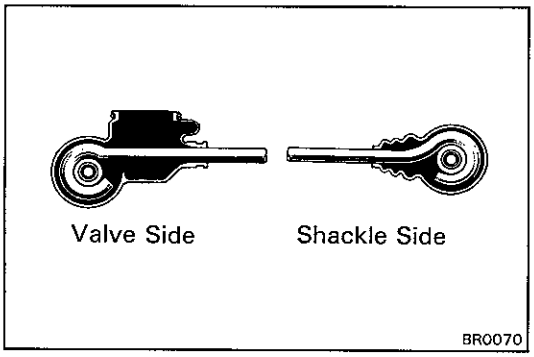

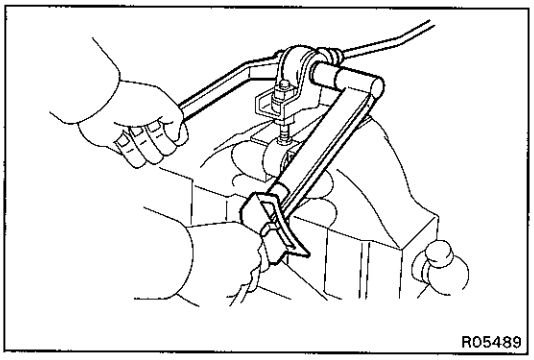

2. **INSTALL SHACKLE NO.1 AND NO.2 TO LOAD SENSING SPRING**

(a) Install the lock nut and shackle No.1 to the shackle No.2.

(b) Install and torque the bolt and nut as shown in illustration.

Torque: 18 N·m (185 kgf·cm, 13 ft·lbf)

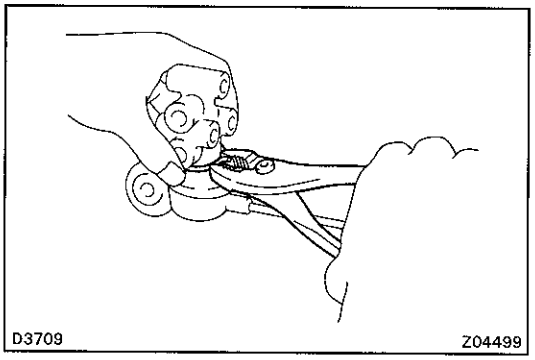

3. **INSTALL LOAD SENSING SPRING TO VALVE BODY**

Install the load sensing spring assembly to the load sensing valve with the clip.

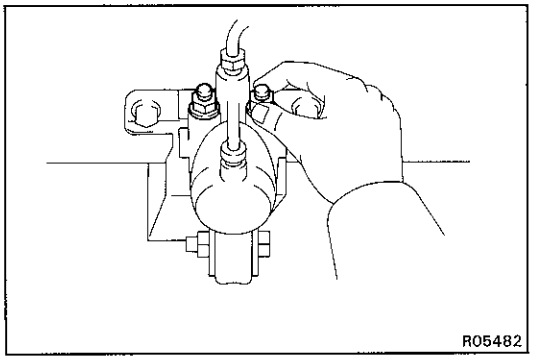

4. INSTALL VALVE BRACKET

(a) Install the two set bolts to the valve assembly through the valve bracket and temporarily tighten the two valve body mounting nuts.

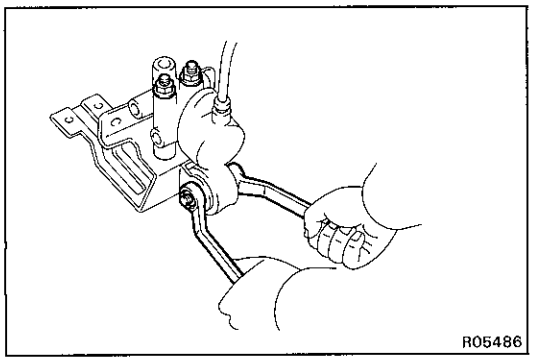

(b) Torque the bolt and nut through the two plate washers.

Torque: 18 N·m (185 kgf·cm, 13 ft·lbf)

LSP & BV INSTALLATION

1. INSTALL LSP & BV ASSEMBLY

Install the LSP & BV assembly to the frame with the four bolts.

Torque: 19 N·m (195 kgf·cm, 14 ft·lbf)

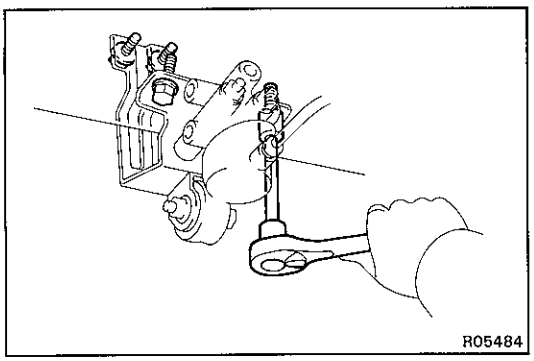

2. CONNECT SHACKLE NO.2 TO BRACKET

(a) Set the dimension A by turning shackle No.2.

Initial set:
90 mm (3.54 in.)

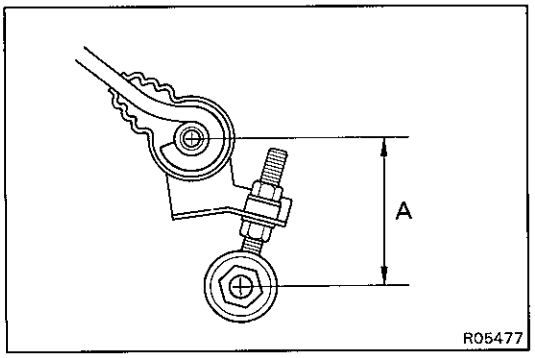

(b) Tighten the lock nut.

Torque: 25 N·m (250 kgf·cm, 18 ft·lbf)

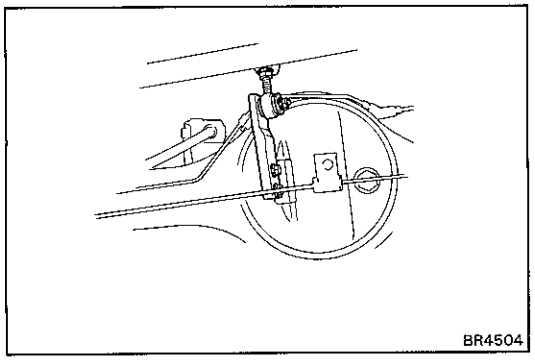

(c) Install the two bushings and collar to the load sensing spring shackle.

(d) Install the load sensing spring to the shackle bracket with a retainer and nut.

Torque: 13 N·m (130 kgf·cm, 9 ft·lbf)

(e) Install a new cotter pin.

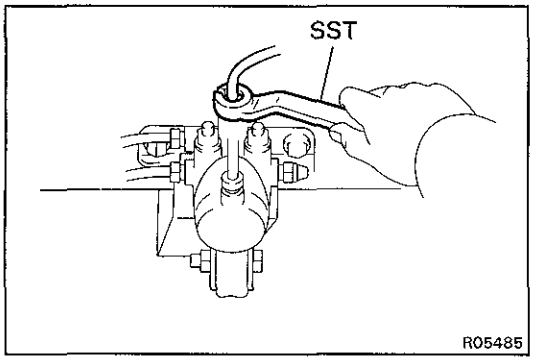

3. **CONNECT BRAKE LINES**

Using SST, connect the brake lines.

SST 09751-36011

Torque: 15 N·m (155 kgf·cm, 11 ft·lbf)

4. **SET REAR AXLE LOAD**
(See page BR-16)

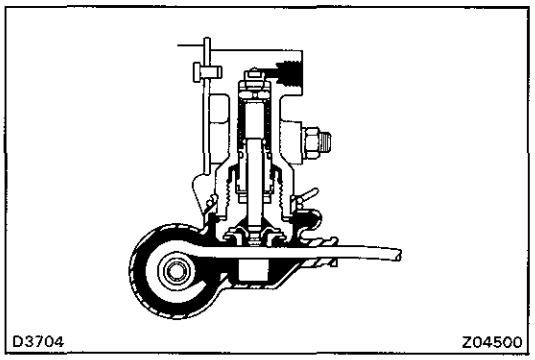

5. **SET VALVE BODY**

(a) When pulling down the load sensing spring, confirm that the valve piston moves down smoothly.

(b) Position the valve body so that the valve piston lightly contacts the load sensing spring.

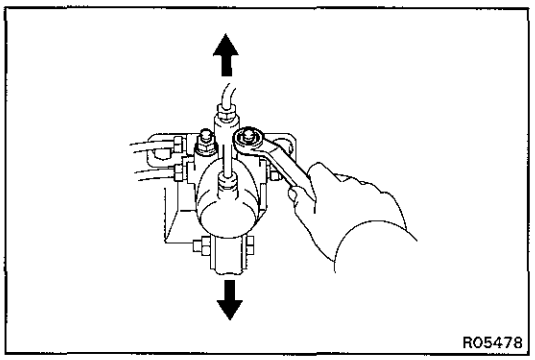

(c) Tighten the valve body mounting nuts.

Torque: 13 N·m (130 kgf·cm, 9 ft·lbf)

6. **BLEED BRAKE SYSTEM**
(See pub No. RM184E, page BR-7)

7. **CHECK FLUID LEAKAGE**

8. **CHECK AND ADJUST LSP & BV FLUID PRESSURE**
(See page BR-16)