ANTI-LOCK BRAKE SYSTEM (ABS)

DESCRIPTION

- The ABS is a brake system which controls the brake cylinder hydraulic pressure of all four wheels during sudden braking and braking on slippery road surfaces, preventing the wheels from locking. This ABS provides the following benefits:
  (1) Enables steering round an obstacle with a greater degree of certainty even when panic braking.
  (2) Enables stopping in a panic brake while keeping the effect upon stability and steerability to a minimum, even on curves.
- The function of the ABS is to help maintain directional stability and vehicle steerability on most road conditions. However, the system cannot prevent the vehicle from skidding if the cornering speed limit is exceeded.
- The ABS has a longitudinal deceleration sensor to match braking characteristics to the full-time four wheel drive.
- In case a malfunction occurs, a diagnosis function and fail-safe system have been adopted for the ABS to increase serviceability.
- When the center differential is locked, the ABS does not operate, so the ABS warning light lights up to indicate this.

COMPONENTS FUNCTION

Component	Function
Front Speed Sensor	Detect the wheel speed of each of the left and right front wheels.
Rear Speed Sensor	Detect the wheel speed of each of the left and right rear wheels.
ABS Warning Light	Lights up to alert the driver when trouble has occurred in the Anti-Lock Brake System and when the center differential is locked.
Actuator	Controls the brake fluid pressure to each disc brake cylinder through signals from the ECU.
ABS ECU	From the wheel speed signals from each sensor, it calculates acceleration, deceleration and slip values and sends signals to the actuator to control brake fluid pressure.
Deceleration Sensor	Detect the deceleration speed of the vehicle and sends a signal accordingly to the ABS ECU.

SYSTEM PARTS LOCATION

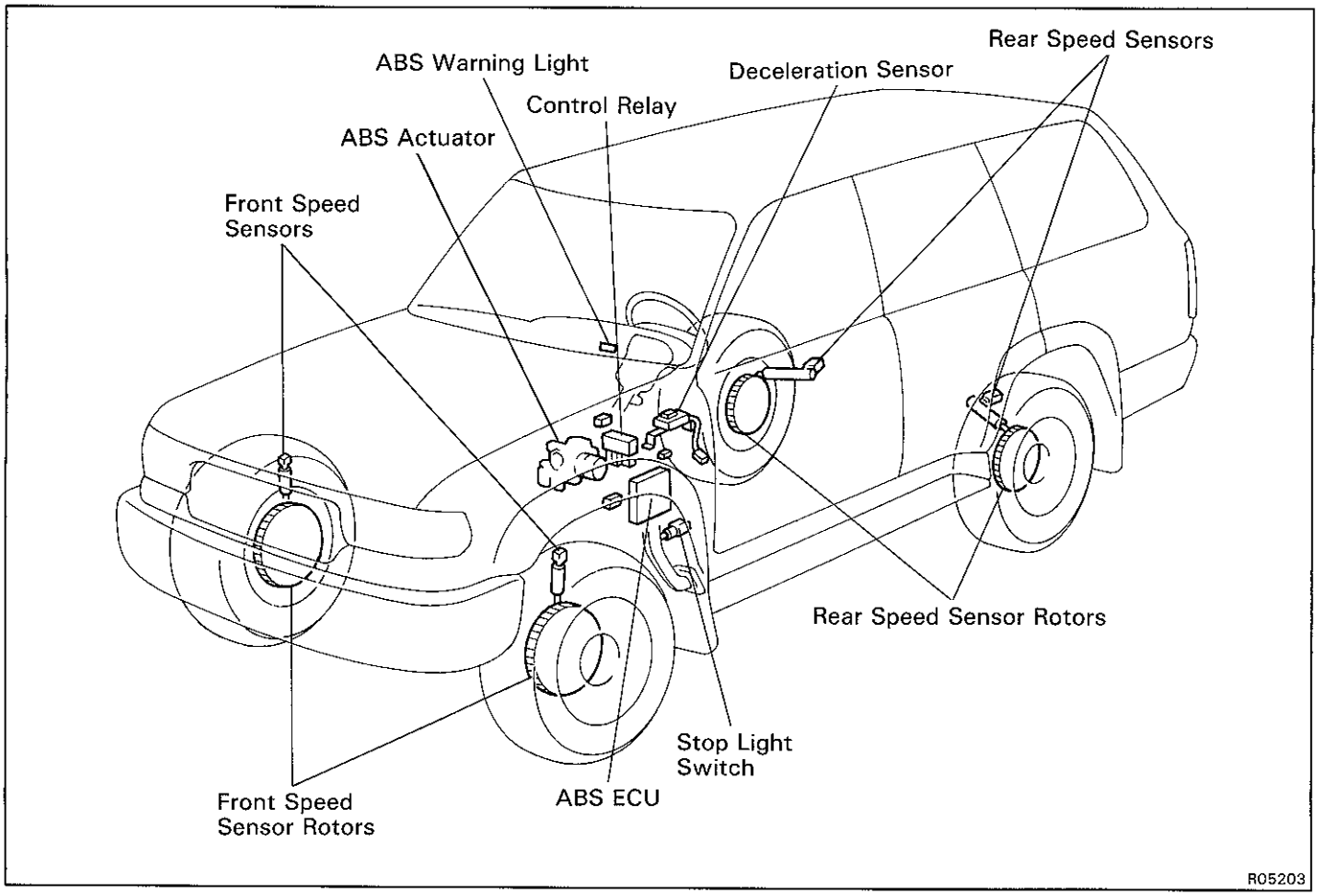

WIRING DIAGRAM

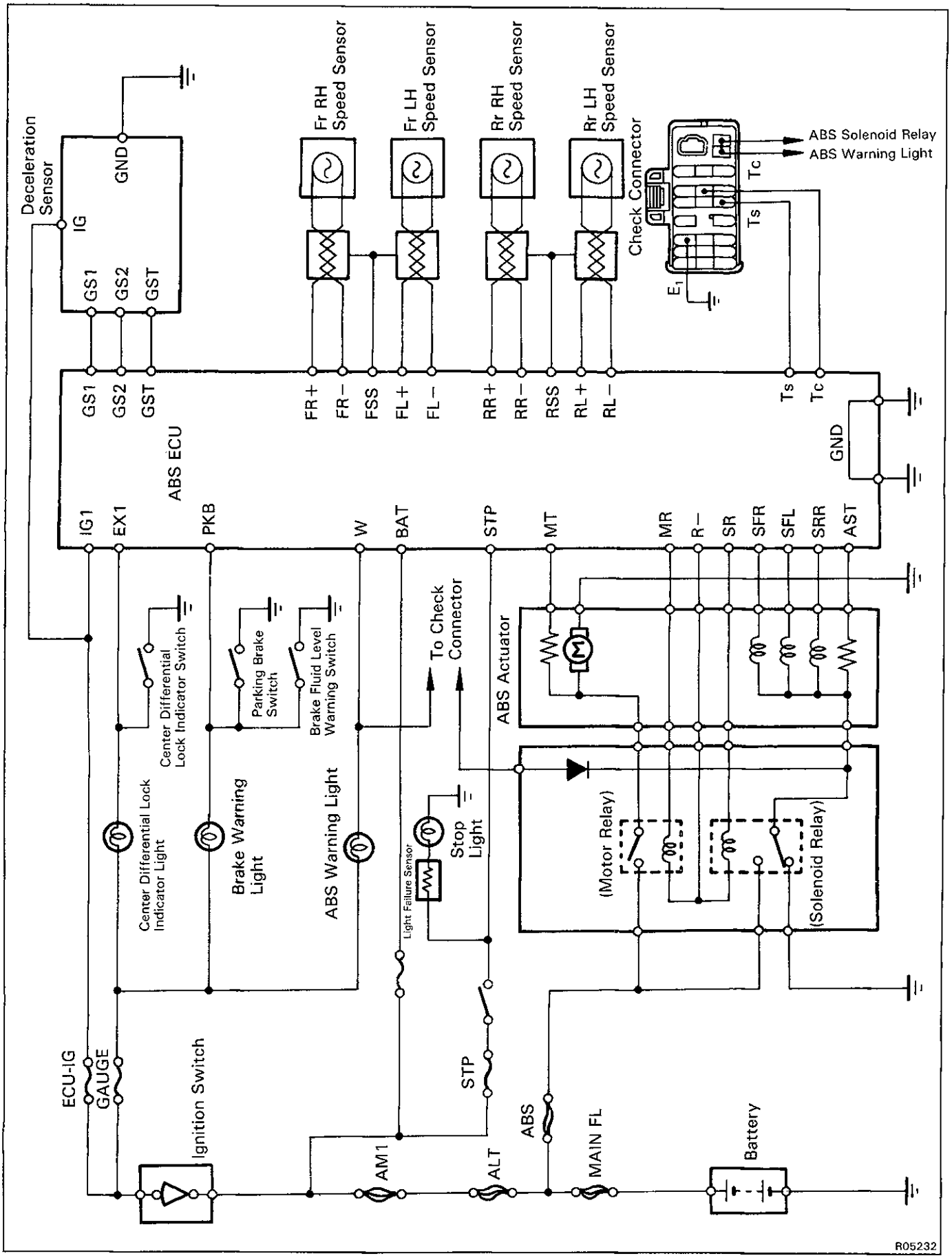

CONNECTORS

ABS Actuator

CONNECTOR A

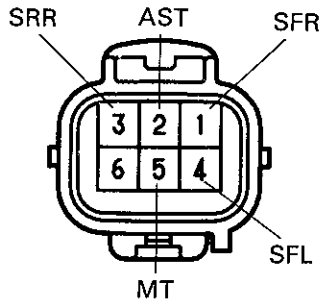

CONNECTOR B

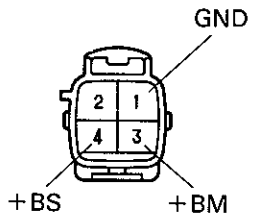

Control Relay

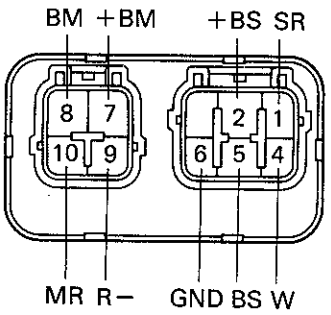

Front Speed Sensor

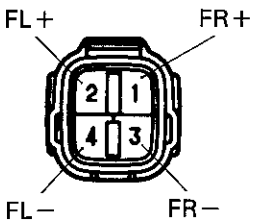

Deceleration Sensor

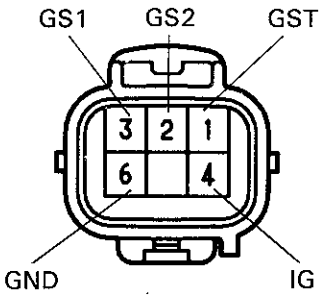

Rear Speed Sensor (LH)

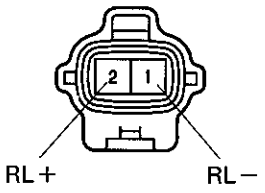

Rear Speed Sensor (RH)

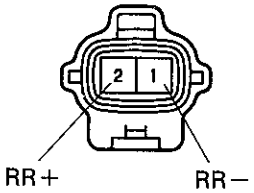

ABS ECU

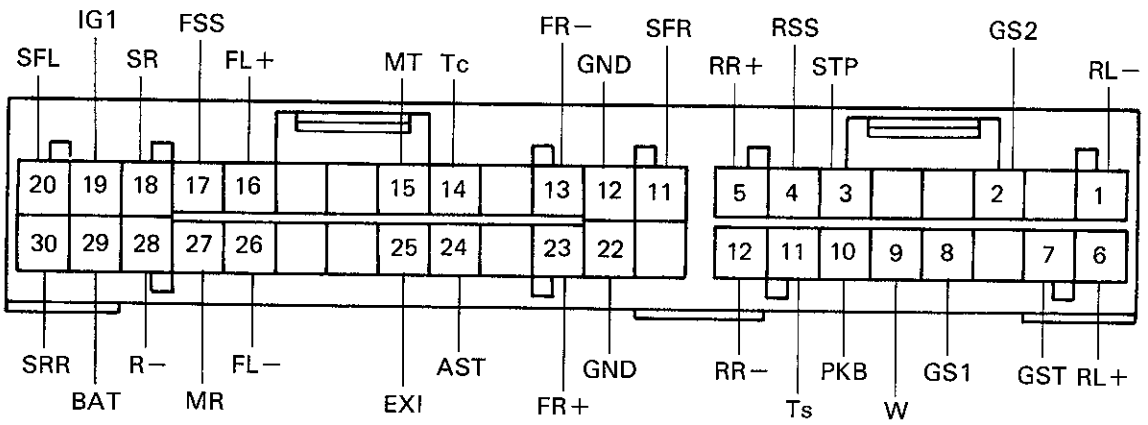

Ie-6-2-C Ig-4-2-A BR3999
Ie-4-2-H Ie-6-2-C
Ie-2-2-T Ie-2-2-T
R00463