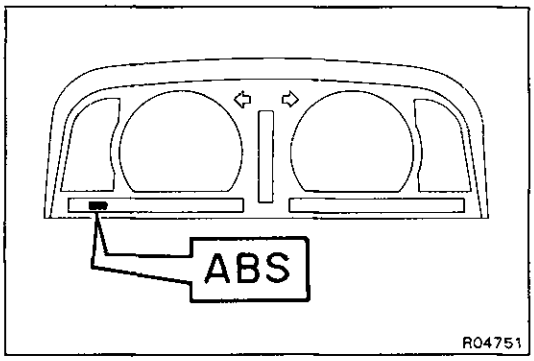

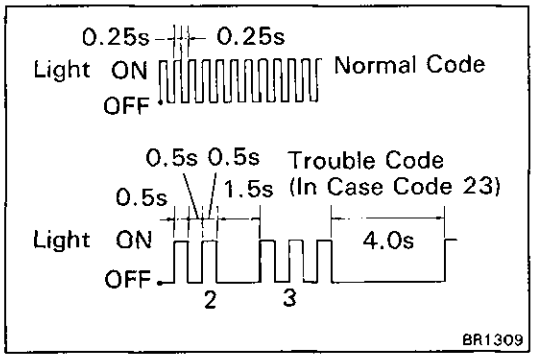

DIAGNOSIS SYSTEM

DESCRIPTION

If a malfunction occurs, the system will identify the problem and the ECU will store the codes for the trouble items.

At the same time, the system informs the driver of a malfunction via the "ABS" warning light in the combination meter.

By turning on the ignition switch, disconnecting the short pin of the check connector and use SST to connect Tc and E_1 of the check connector, the trouble can be identified by the number of blinks (diagnostic code) of the warning light.

In the event of two codes, that having the smallest numbered code will be identified first.

HINT: The warning light does not show the diagnostic codes while the vehicle is running.

When the transfer is in L (center differential lock) position, the ABS does not operate and the ABS warning light stays on.

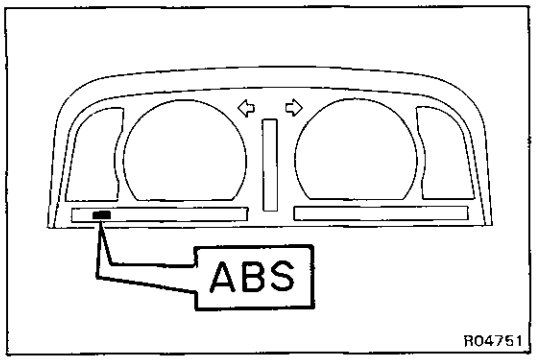

DIAGNOSIS SYSTEM INSPECTION

1. **INSPECT BATTERY VOLTAGE**

   Inspect that the battery voltage is about 12 V.

2. **CHECK THAT WARNING LIGHT TURNS ON**

(a) Confirm that the center differential is free.

(b) Turn the ignition switch on.

(c) Check that the "ABS" warning light turns on for 3 seconds.

If not, inspect and repair or replace the fuse, bulb and wire harness.

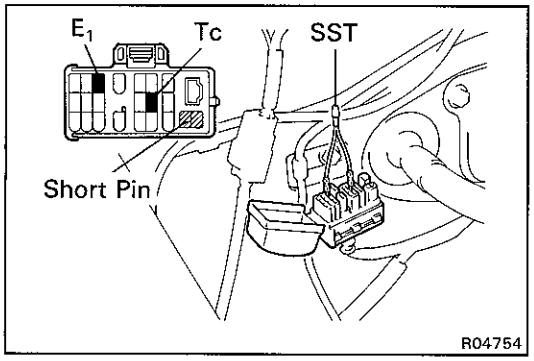

3. READ DIAGNOSTIC CODE

(a) Turn the ignition switch on.

(b) Using SST, connect terminals Tc and E_1 of the check connector.

SST 09843-18020

(c) Pull out the short pin from the terminals WA and WB of the check connector in the engine room.

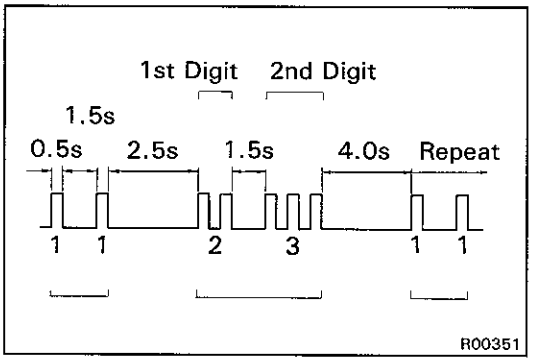

(d) In event of a malfunction, 4 seconds later the warning light will begin to blink. Read the number of blinks. (See page BR-26)

HINT: The first number of blinks will equal the first digit of a two digit diagnostic code. After a 1.5 second pause, the 2nd number of blinks will equal the 2nd number of a two digit code. If there are two or more codes, there will be a 2.5 second pause between each, and indication will begin after 4.0 second pause from the smaller value and continue in order to larger.

(e) If the system is operating normally (no malfunction), the warning light will blink once every 0.5 seconds.

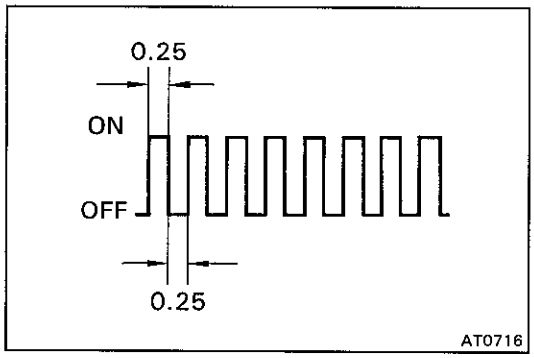

(f) Repair the system.

(g) After the malfunctioning components has been repaired, clear the diagnostic codes stored in the ECU. (See page BR-27)

HINT: If you disconnect the battery cable while repairing, all diagnostic codes in the ECU will erased.

(h) Remove the SST from terminals Tc and E_1 of the check connector.

SST 09843-18020

(i) Install the short pin to the terminals WA and WB.

(j) Turn the ignition switch on, and check that the "ABS" warning light goes off after the warning light goes on for 3 seconds.

DIAGNOSTIC CODE

Code No.	Light Pattern	Diagnosis	Trouble Part
11	ON / OFF 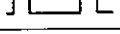 R05039	Open circuit in solenoid relay circuit	• Actuator inside wire harness • Solenoid relay • Wire harness and connector of solenoid relay circuit (Include AST circuit)
12	 R05039	Short circuit in solenoid relay circuit	
13	 R05039	Open circuit in pump motor relay circuit	• Actuator inside wire harness • Pump motor relay • Wire harness and connector of pump motor relay circuit (include MT circuit)
14	 R05039	Short circuit in pump motor relay circuit	
21	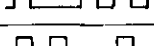 R05039	Open or short circuit in 3 position solenoid of front right wheel	• Actuator solenoid • Wire harness and connector of actuator solenoid circuit
22	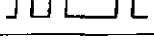 R05039	Open or short circuit in 3 position solenoid of front left wheel	
23	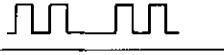 R05039	Open or short circuit in 3 position solenoid of rear wheel	
31	 R05039	Front right wheel speed sensor signal malfunction	• Speed sensor • Sensor rotor • Wire harness and connector of speed sensor
32	 R05039	Front left wheel speed sensor signal malfunction	
33	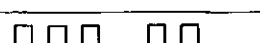 R05039	Rear right wheel speed sensor signal malfunction	
34	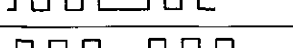 R05039	Rear left wheel speed sensor signal malfunction	
35	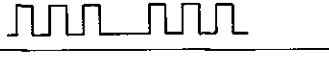 R05039	Open circuit in front left or rear right wheel speed sensor	
36	 R05039	Open circuit in front right or rear left wheel speed sensor	
41	 R05039	Abnormally high or low battery voltage	• Battery • Voltage regulator
43	 R05039	Malfunction in deceleration sensor	• Deceleration sensor • Deceleration sensor installation • Wire harness and connector of deceleration sensor
44	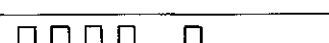 R05039	Open or short circuit in deceleration sensor	
48	 R05039	Open or short circuit in center differential lock indicator	• Center differential lock • Center differential lock indicator light • Center differential lock indicator switch • Wire harness and connector of center differential lock
51	 R05039	Pump motor of actuator locked or open circuit in pump motor circuit in actuator	• Pump motor, relay and battery • Wire harness, connector and ground bolts or actuator pump motor circuit (Include MT circuit)
Always on	 R05039	Malfunction in ECU	• ECU

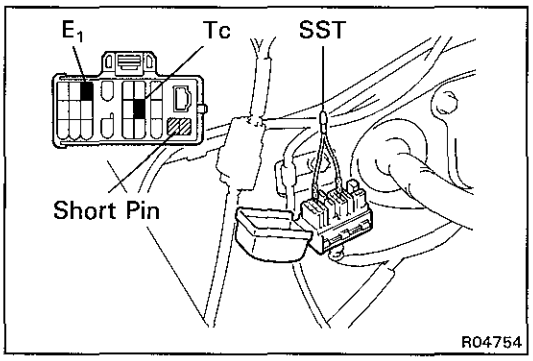

DIAGNOSTIC CODES CLEARING

CLEAR DIAGNOSTIC CODES

(a) Confirm that the center differential is free.

(b) Turn the ignition switch on.

(c) Using SST, connect terminals Tc and E_1 of the check connector.

SST 09843-18020

HINT: Keep the vehicle stopped vehicle speed 0 km/h (0 mph).

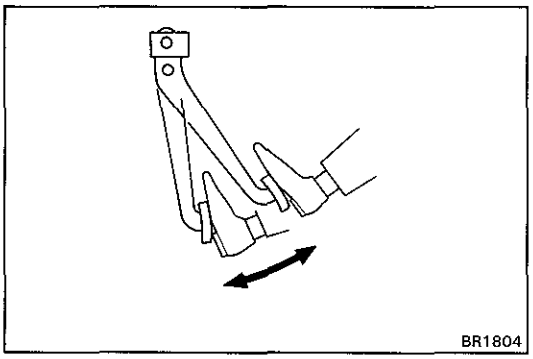

(d) Clear the diagnostic codes stored in ECU by depressing the brake pedal 8 or more times within 3 seconds.

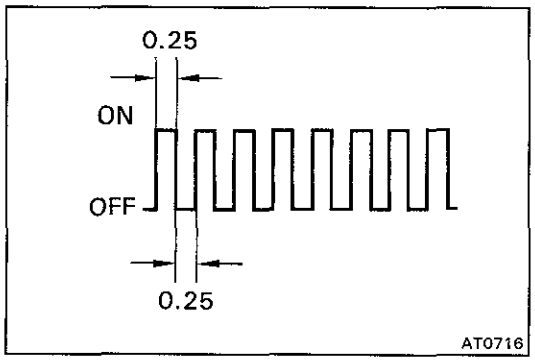

(e) Check that the warning light shows the normal code.

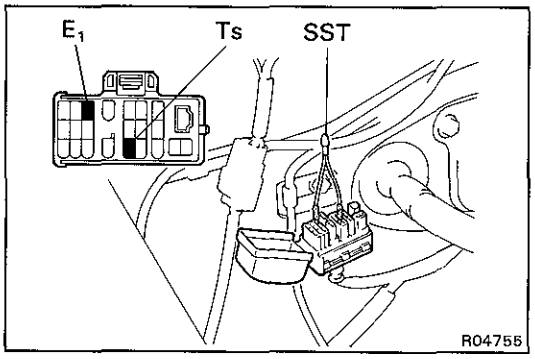

(f) Remove the SST from terminals Tc and E_1 of the check connector.

SST 09843-18020

(g) Check that the warning light goes off.

TROUBLESHOOTING

Problem		No.
"ABS" warning light	Always comes on after ignition switch is turned on.	1
	Does not come on for 3 seconds after ignition switch on.	2
	Goes on and off.	3
	Comes on while running.	1
	Does not light up when the transfer is in L (center differential lock) position.	6
Brake condition	Brakes pull.*	4
	Braking inefficient.*	4
	ABS operates at ordinary braking.	4
	ABS operates just before stopping at ordinary braking.	4
	Brake pedal pulsates abnormally while ABS is operating.	4
	Skidding noise occurs while ABS operating. (ABS operates inefficiently)	5
	When the transfer is in L (center differential lock) position, the ABS operates.	6

* Also check the parts of the brake system (brake cylinders, pads, hydraulic lines, etc.) not specifically part of the ABS.

1	"ABS" warning light comes on.

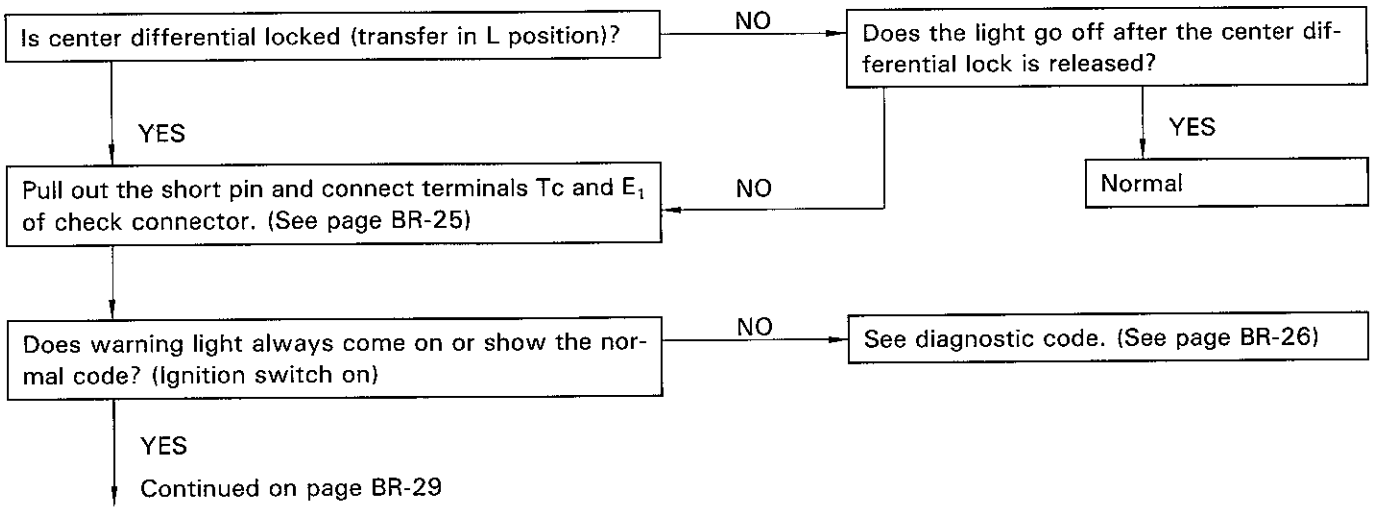

Continued from page BR-28

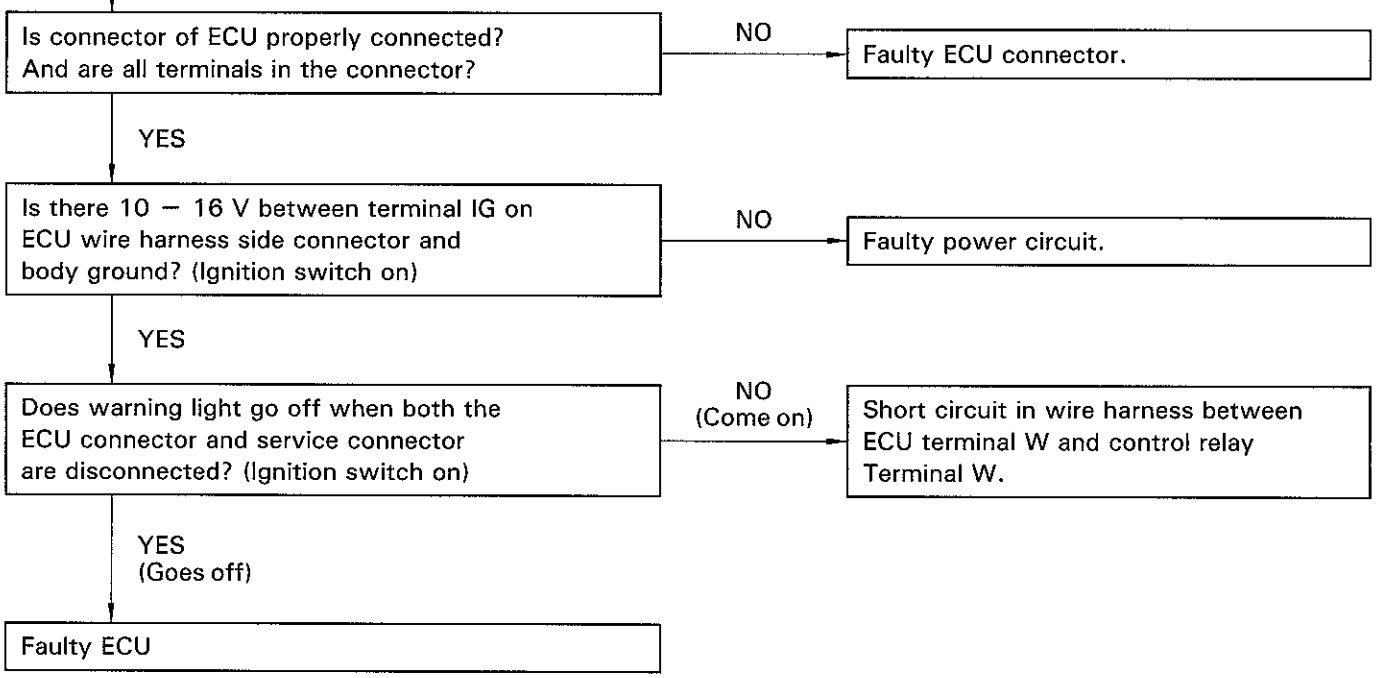

2	"ABS" warning light does not come on for 3 seconds after ignition switch on.

Pull out the short pin and ground the terminal W of the female side connector. (Ignition switch on)

↓

Does warning light come on? — NO → Bulb burned out or open circuit in wire harness between warning light and control relay terminal W.

↓ YES

Disconnect connectors from ECU and control relay and ground terminal W or ECU wire harness side conenctor. (Ignition switch on)

↓

Does warning light come on? — NO → Open circuit in wire harness between ECU terminal W and warning light.

↓ YES

With ignition switch off, disconnect control relay connectors, and check continuity between terminal W and BS on actuator side.

↓

Reverse tester leads and check again.
Is there one way continuity between terminals? — NO → Short circuit in control relay inside diode.

↓ YES

Faulty ECU.

HINT: If the diode is short-circuited, a malfunction at ECU terminal W will occur. When inspecting the terminal, connect the ECU connector, and disconnect actuator connectors and check connector. Then turn the ignition switch on, and check that the warning light goes on. If it does, the ECU terminal is OK.

3	"ABS" warning light comes on and off.

- Check for short circuit in wire harness between terminal Tc and E_1 of check connector.

4	• Brakes pull. • Braking inefficient. • ABS operates at ordinary braking. • ABS operates just before stopping at ordinary braking. • Brake pedal pulsates abnormally while ABS is operating.

Pull out the short pin and connect terminals Tc and E_1 of check connector. (See page BR-25)

↓

Does warning light show the diagnostic normal code? (Ignition switch on)

NO → See diagnostic code. (See page BR-26)

YES ↓

Are each speed sensors installed in place? And are each installation bolts tightened securely?

NO → Speed sensor installation faulty.

YES ↓

Try speed sensor and deceleration sensor diagnosis system. Is sensor signal level OK? (See page BR-34)

NO → Inspect speed sensor, and replace if necessary.

YES ↓

Try speed sensor and deceleration sensor diagnosis system. Is sensor signal change OK? (See page BR-34)

NO → Inspect sensor rotor, and replace if necessary.

YES ↓

Disconnect connector from ECU, inspect continuity between each speed sensor terminals on wire harness side. (See page BR-56)

↓

Does any abnormal change occur in continuity when the connectors or wire harness of the speed sensor and intermediate connectors are twisted or bent?

YES (Abnormal change) → Faulty wire harness.

NO (No change) ↓

Continued on page BR-32

Continued from page BR-31

Is there foreign material or ferric chips on the sensor tip?
- YES → Clean chips from the speed sensor.
- NO ↓

Try deceleration sensor operation diagnosis system. (See page BR-38) is sensor operation OK?
- NO → Faulty deceleration sensor or sensor installation faulty.
- YES ↓

Inspect the actuator operation. (See page BR-52)

Is actuator operation OK?
- NO → Faulty actuator.
- YES ↓

Repalce ECU.

5	Anti-lock brake system operations infficiently.

Pull out the short pin and connect terminals Tc and E_1 of check connector. (See page BR-25)

Does warning light show the diagnostic normal code? (Ignition switch on)
- NO → See diagnostic code. (See page BR-26)
- YES ↓

Is there battery voltage between ECU terminal STP and body ground when depressing brake pedal?
- NO → Open circuit in stop light switch and/or wire harness.
- YES ↓

Inspect actuator. (See page BR-52)

6	• Does not light up when the transfer is in L position. • When the transfer is in L position, the ABS operates.

When the transfer is in L position, does the center differential lock indicator light come on?

NO → • Open circuit in center differential lock indicator switch or wire harness.
• Faulty center differential lock.

YES ↓

When the ECU connector is disconnected, is there continuity between the body and terminal EX1 on the vehicle wire harness side?

NO → Open circuit in wire harness.

YES ↓

Replace ECU.