# DECELERATION SENSOR OPERATION DIAGNOSIS SYSTEM

## PRECAUTION

While checking the deceleration sensor operating diagnosis system, the Anti-lock Brake System does not work and brake system works as normal brake system.

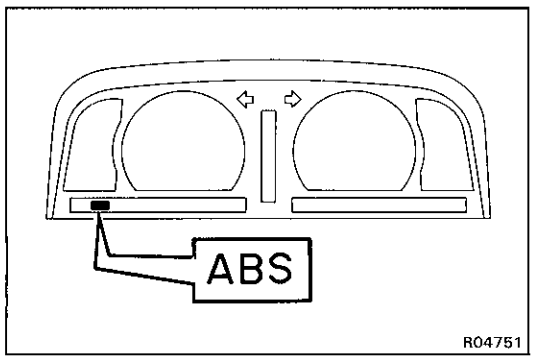


## DIAGNOSIS SYSTEM INSPECTION

### 1. INSPECT BATTERY VOLTAGE

Inspect that the battery voltage is about 12 V.

### 2. CHECK THAT WARNING LIGHT TURNS ON

(a) Turn the ignition switch to ON.

(b) Check that the "ABS" warning light turns on for about 3 seconds.
If not, inspect and repair or replace the fuse, bulb and wire harness.

(c) Check that the "ABS" warning light turns off.

(d) Turn the ignition switch to OFF.

### 3. PERFORM FOLLOWING STEPS

(a) Using SST, connect the terminal Ts to $E_1$ of the check connector.

SST 09843-18020

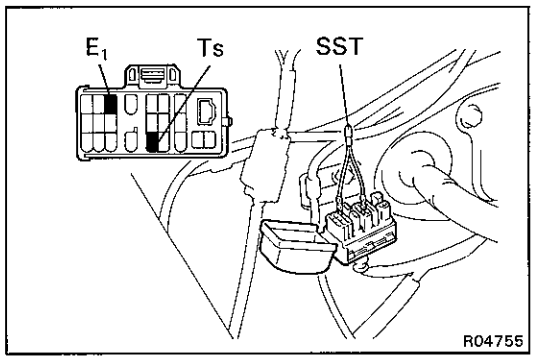


(b) Check that the warning light blinks about 4 time every 1 second when 3 seconds after the engine is started.

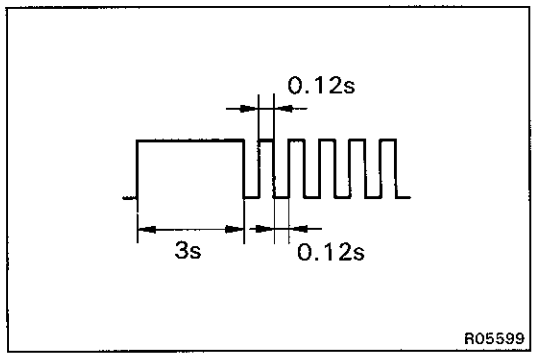


### 4. INSPECT SENSOR DETECTION POINT

(a) Jack up the rear side of the vehicle slowly as shown.

HINT: When measuring the height, measure at the center of the lower body of the vehicle.

(b) Check that the warning light does not turn on.
If the warning light turns on, inspect the deceleration sensor installation. And if the sensor installation is OK, replace the deceleration sensor.

(c) Jack down the vehicle slowly.

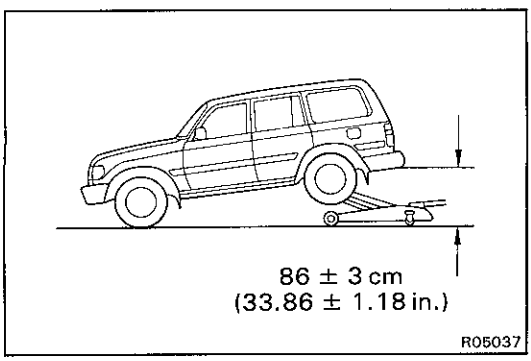

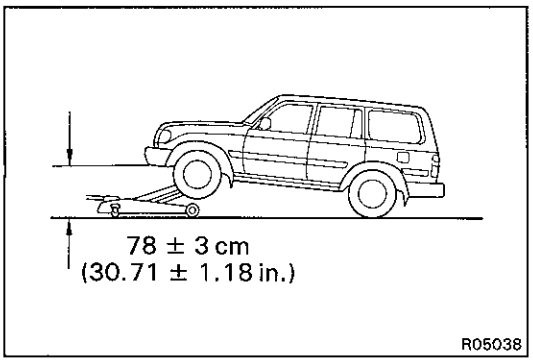


(d) Jack up the front side of the vehicle slowly as shown.

HINT: When measuring the height, measure at the center of the lower body of the vehicle.

(e) Check that the warning light does not turn on.
If the warning light turns on, inspect the deceleration sensor installation. And if the sensor installation is OK, replace the deceleration sensor.

(f) Jack down the vehicle slowly.

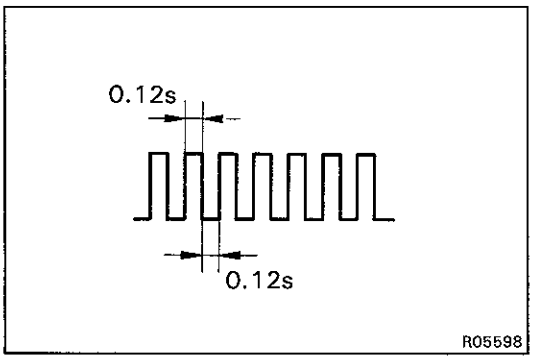


**5. INSPECT SENSOR OPERATION**

(a) Drive the vehicle straight ahead at about 20 km/h (12.4 mph) or more, lightly depress the brake pedal.

(b) Check that there is no change in the warning light pattern.

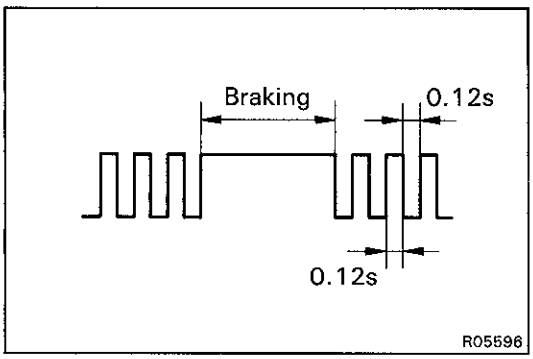


(c) Drive the vehicle straight ahead at about 20 km/h (12.4 mph) or more, depress the brake pedal a little strong.

(d) Check that the warning light turns on while braking.

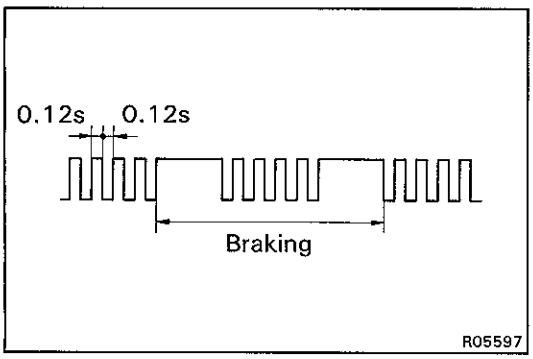


(e) Drive the vehicle straight ahead at about 20 km/h (12.4 mph) or more, depress the brake pedal strongly.

(f) Check that the warning light pattern changes while braking as shown.
If the operation is not as specified, inspect the deceleration sensor installation. And if the sensor installation is OK, replace the deceleration sensor.

**6. PERFORM FOLLOWING STEPS**

(a) Stop the vehicle and turn the ignition switch to OFF.

(b) Remove SST from the terminals Ts and $E_1$ of the check connector.

SST 09843-18020