FRONT SPEED SENSOR

COMPONENTS

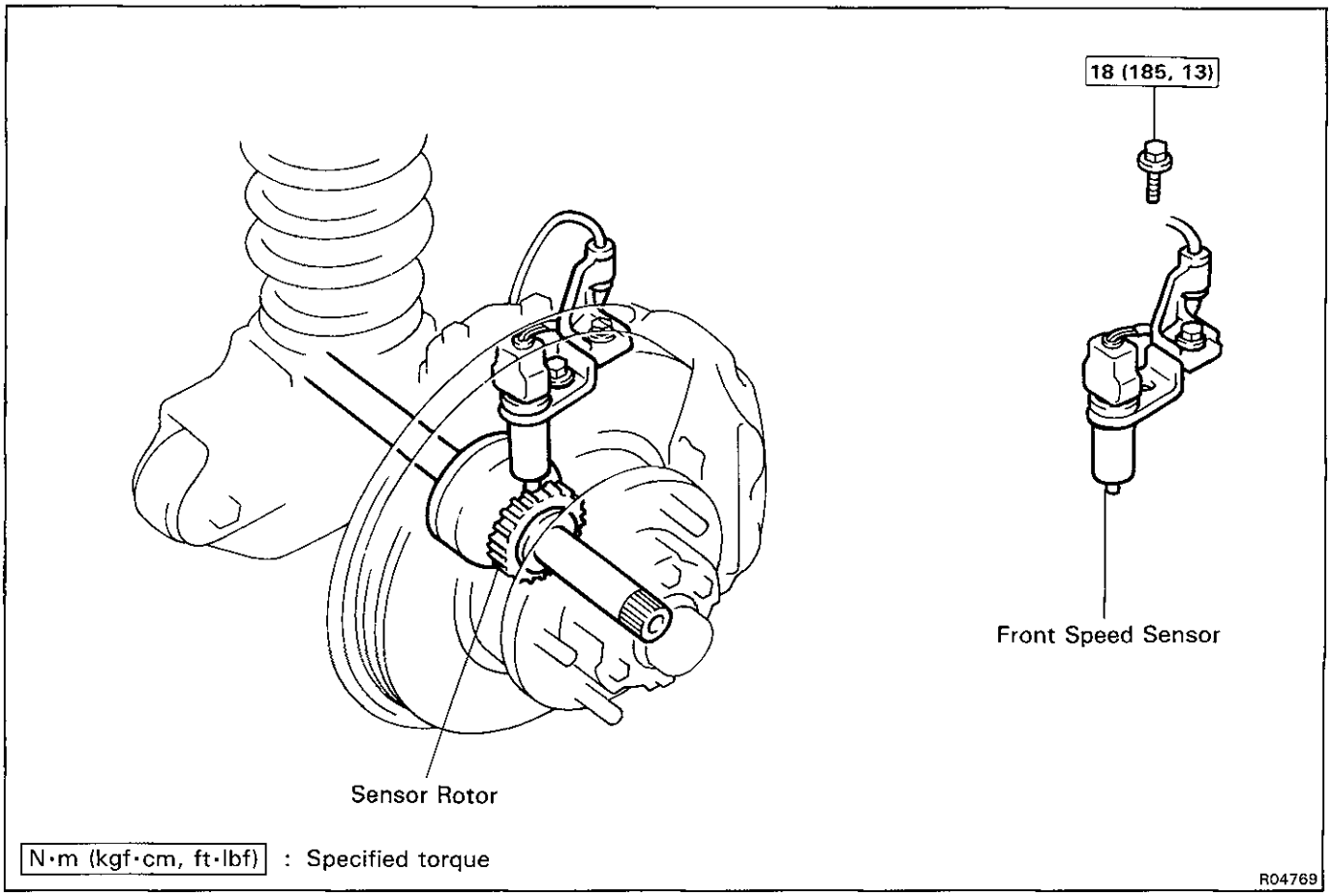

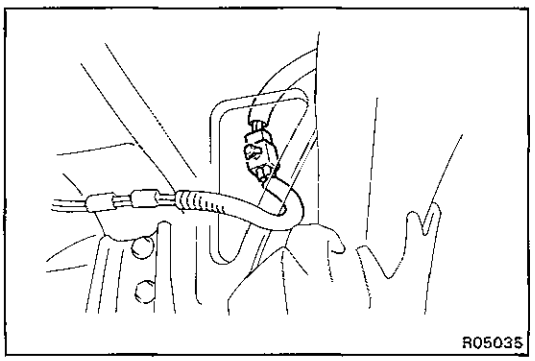

FRONT SPEED SENSOR INSPECTION

1. **INSPECT SPEED SENSOR**

(a) Disconnect the speed sensor connector.

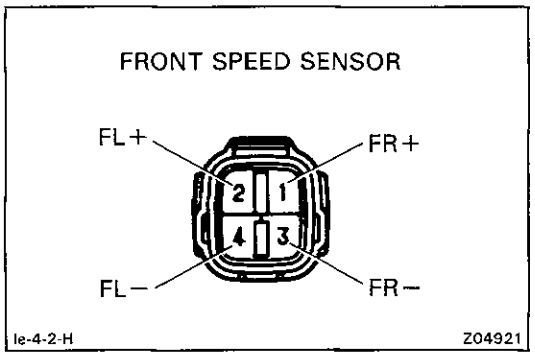

(b) Measure the resistance between terminals FR+, FR− and FL+, FL−.

Resistance:

0.87 – 1.27 kΩ

If resistance value is not as specified, replace the sensor.

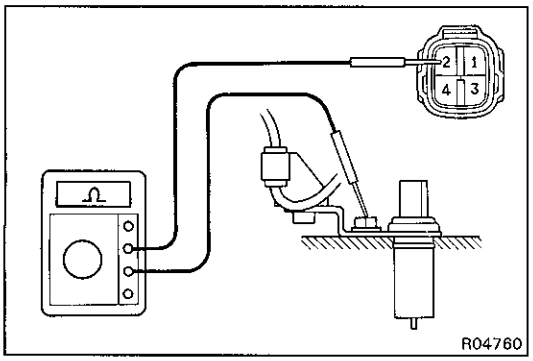

(c) Check that there is no continuity between each terminal and sensor body.
If there is continuity, replace the sensor.

(d) Connect the speed sensor connector.

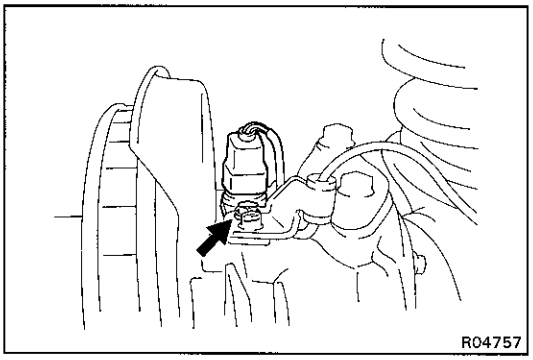

2. INSPECT SENSOR INSTALLATION

Check that the sensor installation bolt is tightened properly. If not, tighten the bolt.

Torque: 18 N·m (184 kgf·cm, 13 ft·lbf)

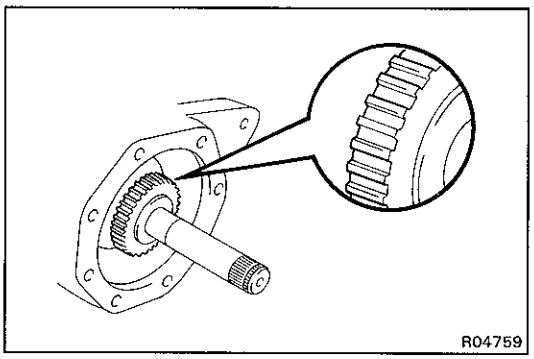

3. VISUALLY INSPECT SENSOR ROTOR SERRATIONS

(a) Remove the axle hub with disc.
(See pub No. RM184E, page SA-16)

(b) Inspect the sensor rotor serrations for scratches, cracks, warping or missing teeth.

(c) Install the axle hub with disc.
(See pub No. RM184E, page SA-19)

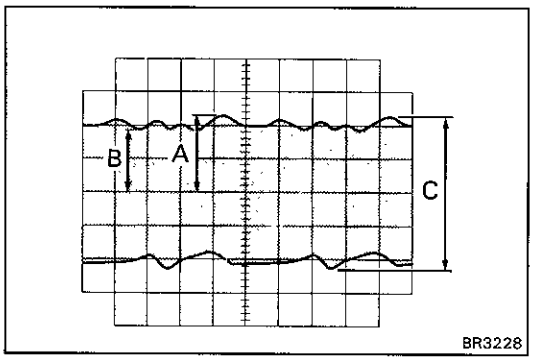

FRONT SPEED SENSOR AND SENSOR ROTOR SERRATIONS INSPECTION (REFERENCE)

INSPECT FRONT SPEED SENSOR AND SENSOR ROTOR SERRATIONS BY USING AN OSCILLOSCOPE

(a) Connect an oscilloscope to the speed sensor connector.

(b) Run the vehicle at 20 km/h (12.4 mph), and inspect speed sensor output wave.

(c) Check that C is 0.5 V or more.
If not as specified, replace the speed sensor.

(d) Check that B is 50 % or more of A.
If not as specified, replace the sensor rotor.

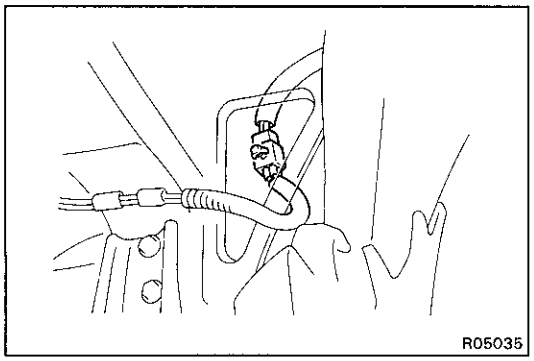

FRONT SPEED SENSOR REMOVAL

HINT: When replacing the sensor or sensor harness, replace the sensor and sensor harness together as a set.

Disconnect the speed sensor connector.

1. DISCONNECT SPEED SENSOR CONNECTOR

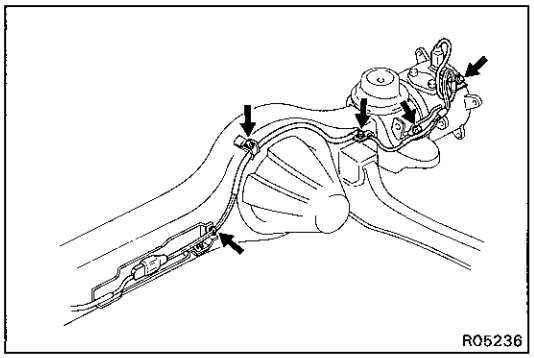

2. REMOVE SPEED SENSOR

(a) Remove the four clamp bolts holding the sensor harness RH from the axle housing.

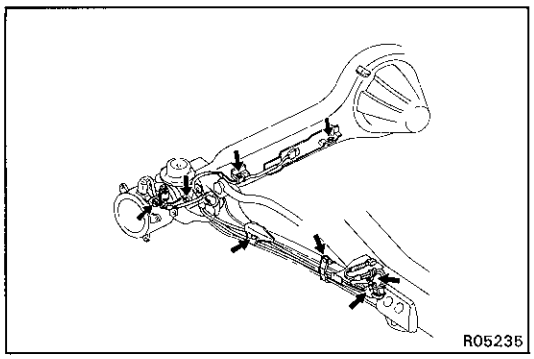

(b) Remove the eight clamp bolts holding the sensor harness LH from the axle housing and leading arm.

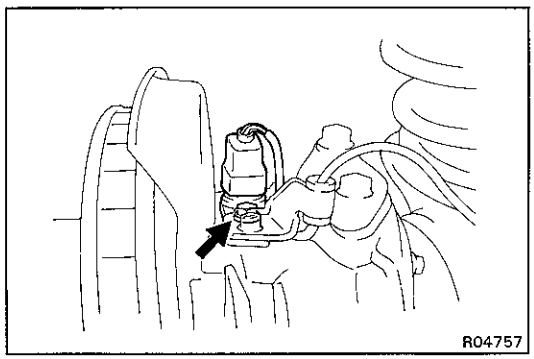

(c) Remove the speed sensor LH and RH from the steering knuckle.

FRONT SPEED SENSOR INSTALLATION

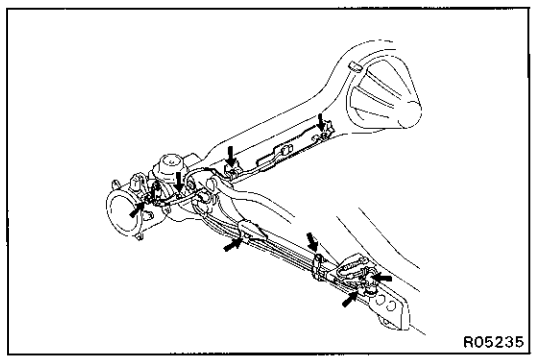

1. INSTALL SPEED SENSOR WIRE HARNESS

(a) Install the sensor harness LH with the clamps and bolts in place.

Torque: 18 N·m (185 kgf·cm, 13 ft·lbf)

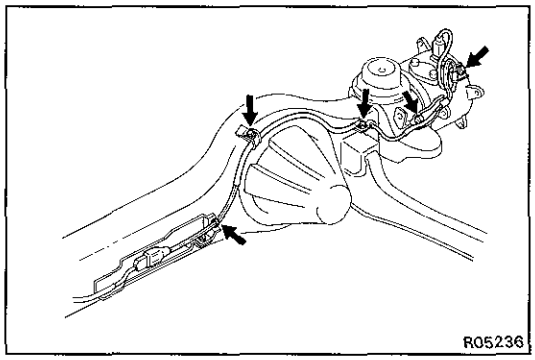

(b) Install the sensor harness RH with the clamps and bolts in place.

Torque: 18 N·m (185 kgf·cm, 13 ft·lbf)

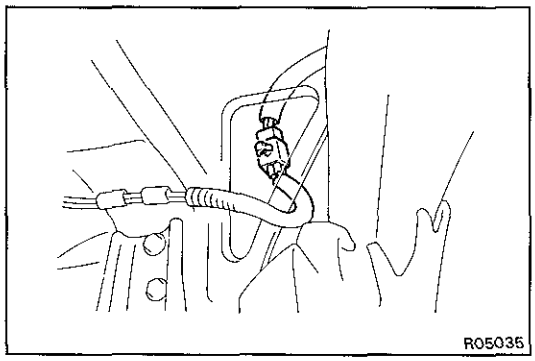

(c) Connect the speed sensor connector.

Torque: 18 N·m (185 kgf·cm, 13 ft·lbf)

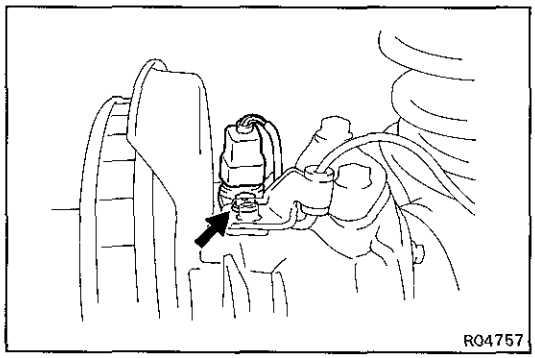

2. INSTALL SPEED SENSOR

HINT: When replacing the sensor, adjust the air gap.

(a) Install the speed sensor LH and RH to the steering knuckle.

Torque: 18 N·m (185 kgf·cm, 13 ft·lbf)

(b) Connect the connector.

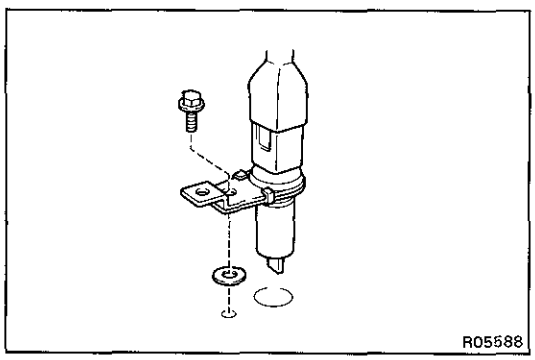

FRONT SPEED SENSOR AIR GAP ADJUSTMENT

FRONT SPEED SENSOR AIR GAP ADJUSTMENT

(a) Install the speed sensor and 0.2 mm spacer to the steering knuckle.

(b) Try speed sensor and deceleration sensor diagnosis system.

(c) If diagnosis code 71 or 72 is not displayed, remove the 0.2 mm spacer and install the speed sensor to the steering knuckle.

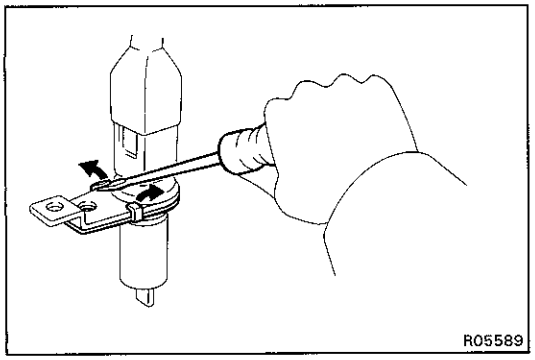
R05589

(d) If diagnosis code 71 or 72 is displayed, replace the 0.5 mm spacer inserted in the speed sensor with a 0.35 mm spacer.
   (1) Using a screwdriver to remove the 0.5 mm spacer.

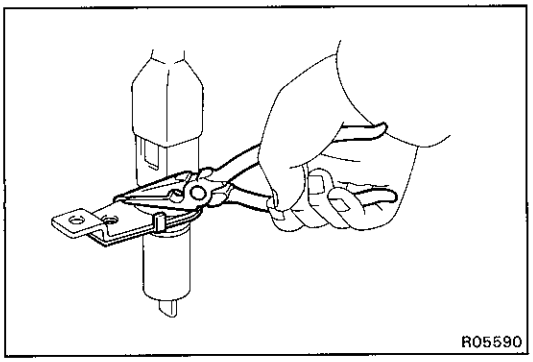
R05590

   (2) Using needle-nose pliers to install the 0.35 mm spacer.

(e) Repeating (a) and (b) to the step 1.

(f) If diagnosis code 71 or 72 is not displayed, remove the 0.2 mm spacer and install the speed sensor to the steering knuckle.

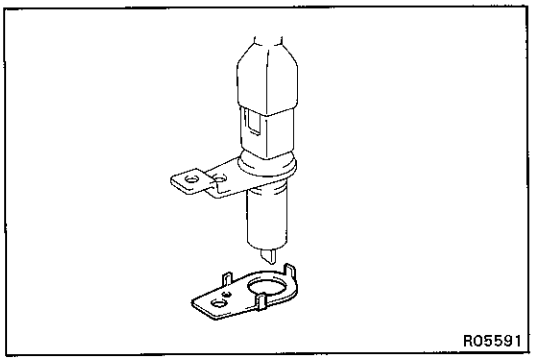
R05591

(g) If diagnosis code 71 or 72 is displayed, replace the 0.35 mm spacer with a 0.25 mm spacer.

(h) Repeating (a) and (b) to the step 1.

(i) If diagnosis code 71 or 72 is not displayed, remove the 0.2 mm spacer and install the speed sensor to the steering knuckle.

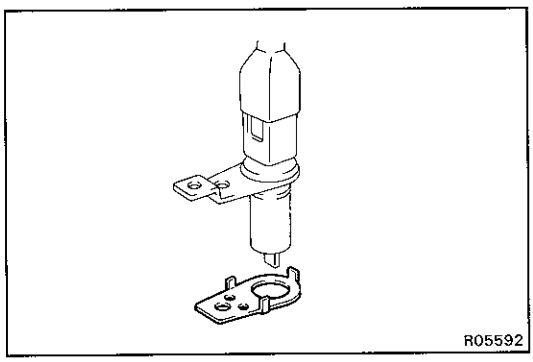
R05592

(j) If diagnosis code 71 or 72 is displayed, replace the 0.25 mm spacer with a 0.15 mm spacer and install the speed sensor to the steeing knuckle without using the 0.2 mm spacer.