REAR SPEED SENSOR

COMPONENTS

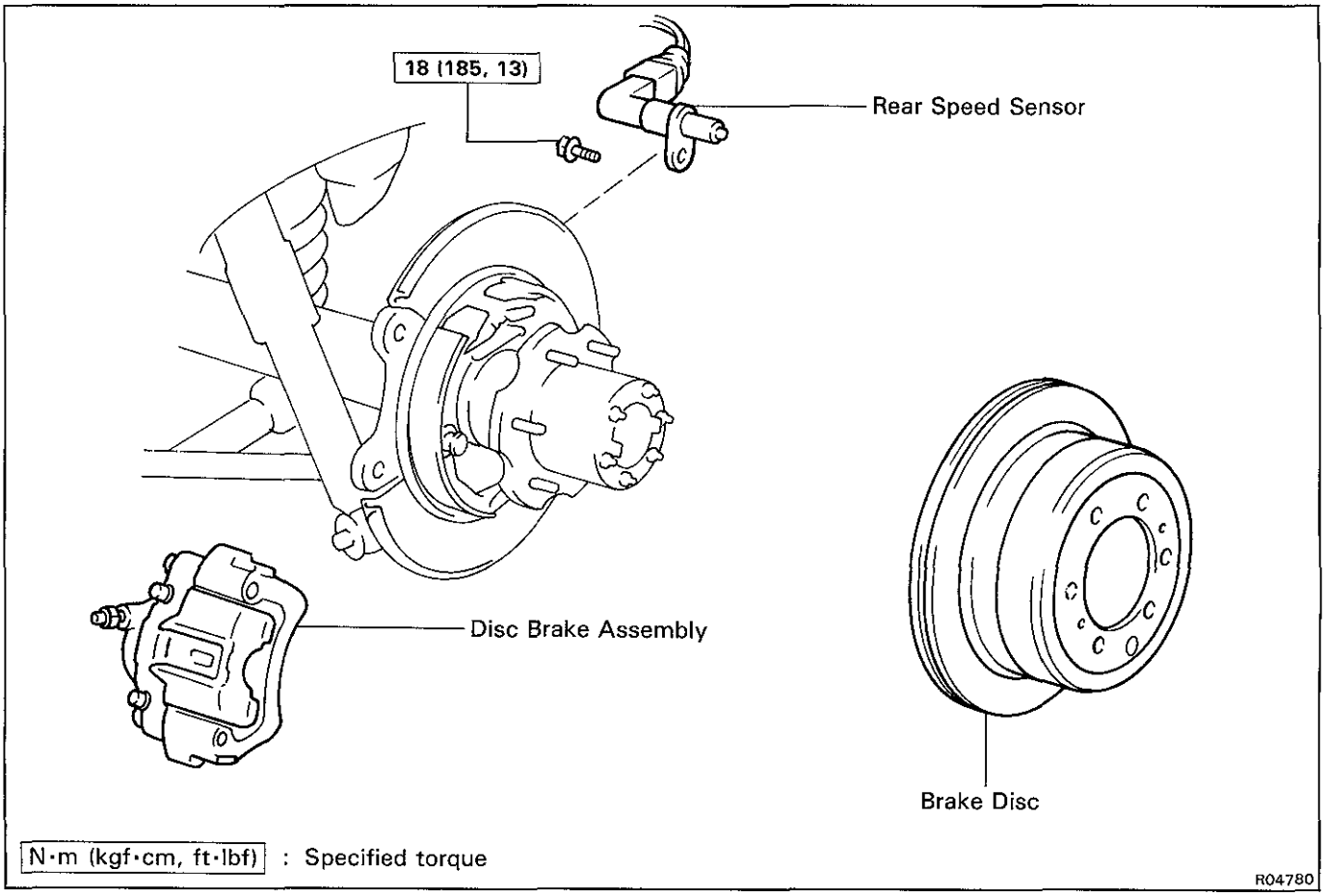

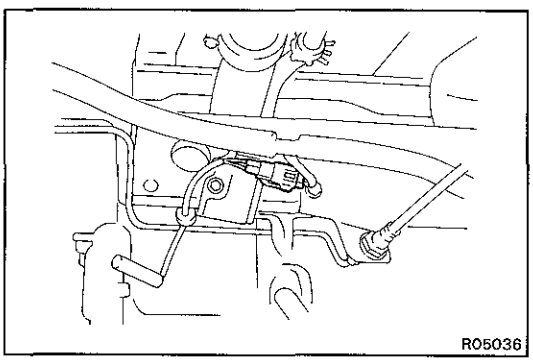

REAR SPEED SENSOR INSPECTION

1. INSPECT SPEED SENSOR

(a) Disconnect the speed sensor connector.

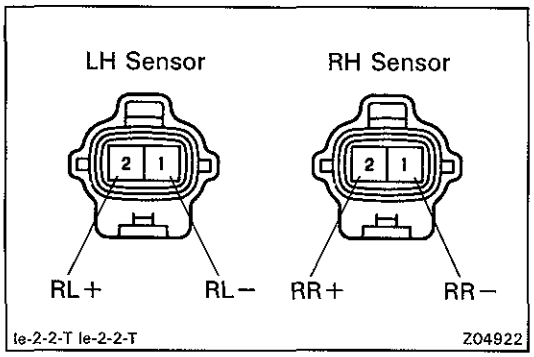

(b) Measure the resistance between terminals.

Resistance:

0.7 — 1.1 kΩ

If resistance value is not as specified, replace the sensor.

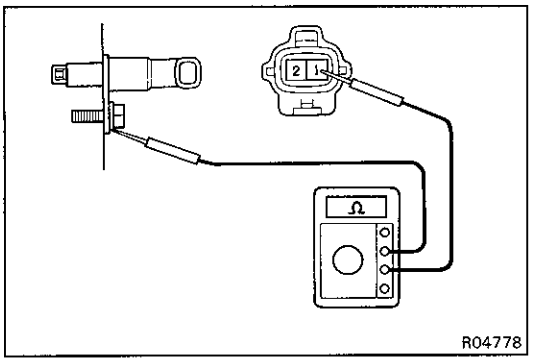

(c) Check that there is no continuity between each terminal and sensor body.
If there is continuity, replace the sensor.

(d) Connect the speed sensor connector.

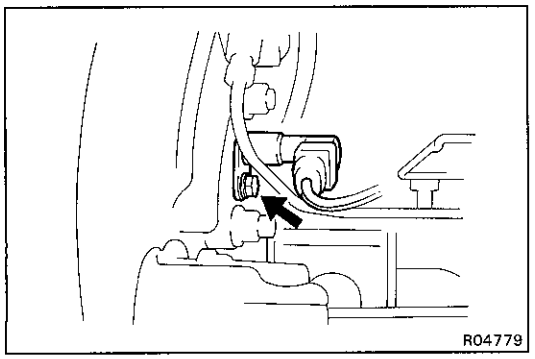

2. INSPECT SENSOR INSTALLATION

Check that the sensor installation bolt is tightened properly. If not, tighten the bolt.

Torque: 18 N·m (185 kgf·cm, 13 ft·lbf)

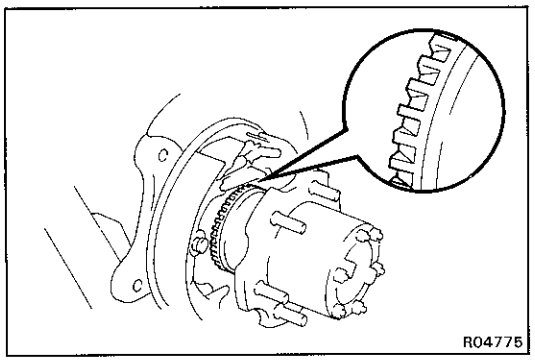

3. VISUALLY INSPECT SENSOR ROTOR SERRATIONS

(a) Remove the brake disc.
(See pub No. RM184E, page BR-57)

(b) Inspect the sensor rotor serrations for scratches, cracks, warping or missing teeth.

(c) Install the brake disc.
(See pub No. RM184E, page BR-64)

NOTICE: To prevent damage to the serrations, do not strike the axle hub.

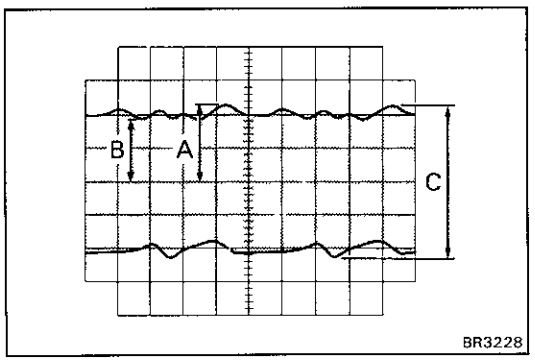

REAR SPEED SENSOR AND SENSOR ROTOR SERRATIONS INSPECTION (REFERENCE)

INSPECT REAR SPEED SENSOR AND SENSOR ROTOR SERRATIONS BY USING AN OSCILLOSCOPE

(a) Connect an oscilloscope to the speed sensor connector.

(b) Run the vehicle at 20 km/h (12.4 mph), and inspect speed sensor output wave.

(c) Check that C is 0.5 V or more.
If not as specified, replace the speed sensor.

(d) Check that B is 50 % or more of A.
If not as specified, replace the rear axle hub.

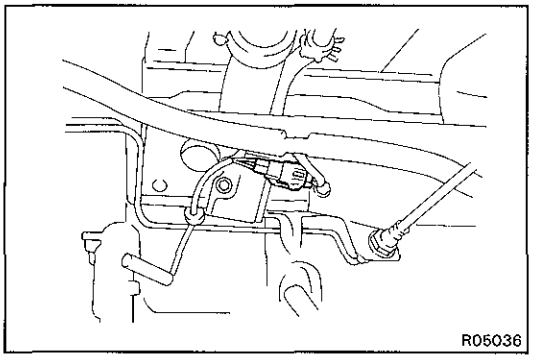

REAR SPEED SENSOR REMOVAL

HINT: When replacing the sensor or sensor harness, replace the sensor and sensor harness together as a set.

1. DISCONNECT SPEED SENSOR CONNECTOR

(a) Disconnect the speed sensor connector.

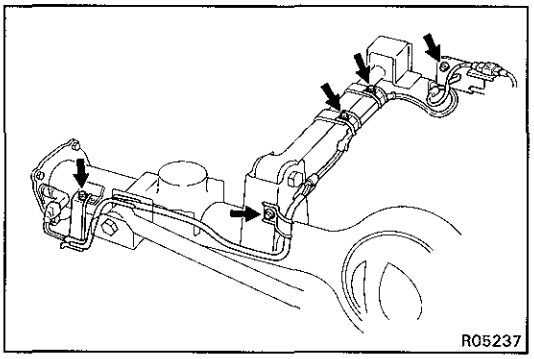

(b) Remove the five clamp bolts holding the sensor wire harness from the suspension arm and frame.

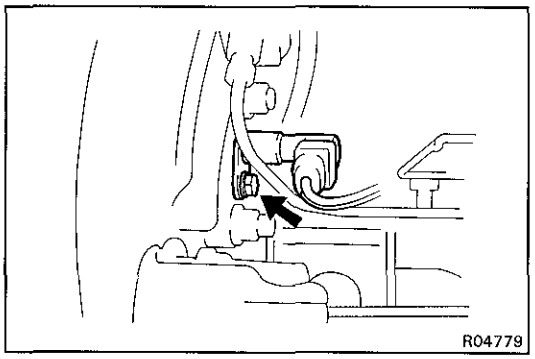

2. REMOVE SPEED SENSOR

Remove the speed sensor from the axle end.

REAR SPEED SENSOR INSTALLATION

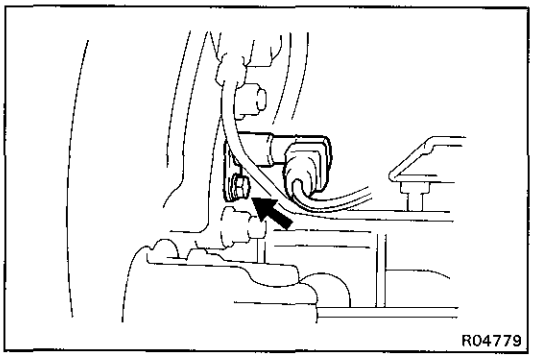

1. INSTALL SPEED SENSOR

Install the speed sensor to the axle end.

Torque: 18 N·m (185 kgf·cm, 13 ft·lbf)

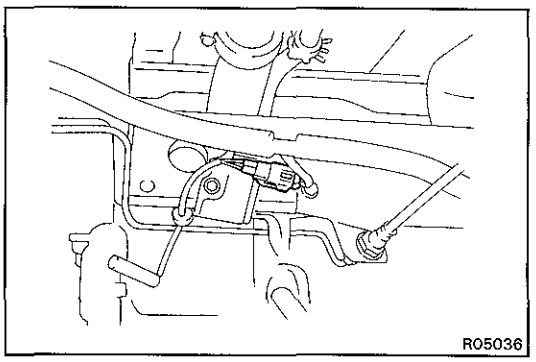

2. CONNECT SPEED SENSOR CONNECTOR

(a) Connect the speed sensor connector.

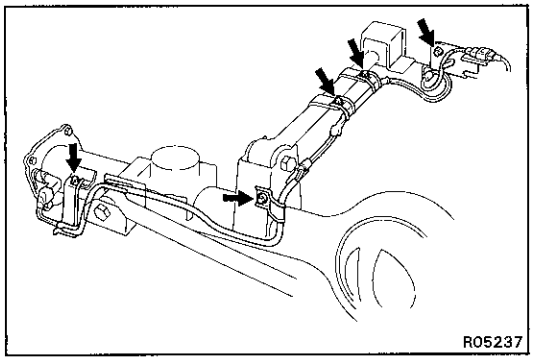

(b) Install the sensor harness with the clamps and bolts in place.

3. INSPECT SPEED SENSOR AND DECELERATION SENSOR DIAGNOSIS SYSTEM