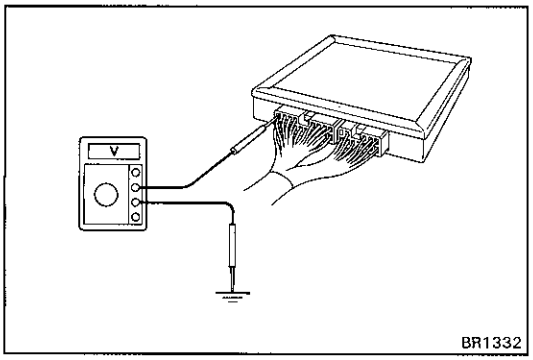


# ANTI-LOCK BRAKE SYSTEM CIRCUIT

## SYSTEM CIRCUIT INSPECTION

1. **INSPECT SYSTEM CIRCUIT WITH CONNECTOR CONNECTED**

(a) Remove the ABS ECU.

(b) Using a voltmeter with high impedance (10 kΩ/V minimum), measure the voltage at each terminal and body ground.

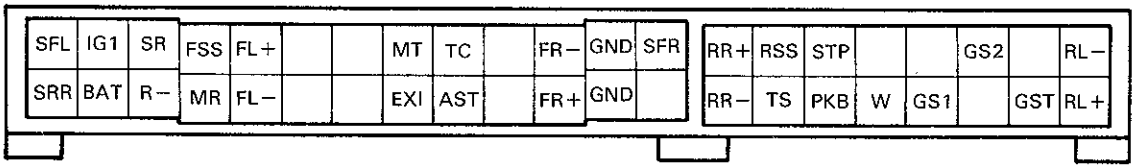


R01275

| Tester Connection | Check Item | Condition | Specified Value | Trouble Part |
|---|---|---|---|---|
| RL− | Continuity | IG switch off | Continuity | ABS ECU |
| GS2 | Voltage | IG switch on | 4 ~ 6 V | Deceleration Sensor |
| STP | Voltage | IG switch off and brake pedal depressed | Battery voltage | Stop light switch Stop Light |
| | Continuity | IG switch off and brake pedal returned | Continuity | |
| RSS | Continuity | IG switch off | Continuity | ABS ECU |
| GS1 | Voltage | IG switch on | 4 ~ 6 V or 7 ~ 12 V | Deceleration Sensor |
| W | Voltage | IG switch on and "ABS" warning light goes on | About 0 V | ABS ECU "ABS" warning light |
| | | IG switch on and "ABS" warning light goes off | Battery voltage | |
| PKB | Voltage | IG switch on and PKB lever pulled | About 0 V | Parking brake switch Level warning switch |
| | | IG switch on and PKB lever returned | Battery voltage | |
| TS | Voltage | IG switch on and check connector Tc−$E_1$ connected | About 0 V | ABS ECU |
| RR− | Continuity | IG switch off | Continuity | |
| SFR | Voltage | IG switch on and "ABS" warning light goes on | About 0 V | Actuator |
| | | IG switch on and "ABS" warning light goes off | Battery voltage | |
| GND | Continuity | IG switch off | Continuity | Wiring harness |
| FR− | Continuity | IG switch off | Continuity | ABS ECU |
| TC | Voltage | IG switch on and check connector Tc−$E_1$ not connected | Battery voltage | |
| | | IG switch on and check connector Tc−$E_1$ connected | About 0 V | |
| FSS | Continuity | IG switch off | Continuity | |
| SR | Voltage | IG switch on and "ABS" warning light goes on | About 0 V | |
| | | IG switch on and "ABS" warning light goes off | Battery voltage | |
| IG1 | Voltage | IG switch on | Battery voltage | ECU-IG Fuse |

| Tester Connection | Check Item | Condition | Specified Value | Trouble Part |
|---|---|---|---|---|
| SFL | Voltage | IG switch on and "ABS" warning light goes on | About 0 V | Actuator |
| | | IG switch on and "ABS" warning light goes off | Battery voltage | |
| AST | Voltage | IG switch on and "ABS" warning light goes on | About 0 V | |
| | | IG switch on and "ABS" warning light goes off | Battery voltage | |
| EXI | Voltage | IG switch on and center differential lock indicator light goes off | Battery voltage | GAUGE Fuse |
| FL− | Continuity | IG switch off | Continuity | ABS ECU |
| R− | Continuity | IG switch off | Continuity | |
| BAT | Voltage | IG switch off | Battery voltage | DOME Fuse |
| SRR | Voltage | IG switch on and "ABS" warning light goes on | About 0 V | Actuator |
| | | IG switch on and "ABS" warning light goes off | Battery voltage | |

If the circuit is not as specified, check and repair or replace the trouble part shown in the table above.

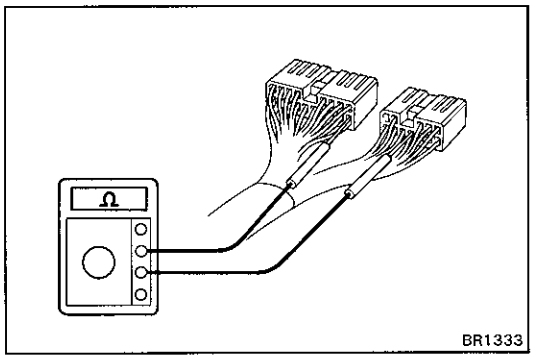


**2. INSPECT SYSTEM CIRCUIT WITH CONNECTOR DISCONNECTED**

(a) Disconnect the connectors from the ECU, inspect at the wire harness side connector.

| Tester Connection | Check Item | Specified Value | Trouble Part | Tester Connection | Check Item | Specified Value | Trouble Part |
|---|---|---|---|---|---|---|---|
| RR+↔RR− | Resistance | *0.7 ~1.1 kΩ | Rear RH speed sensor | SFL↔AST | Resistance | *About 6 Ω | Actuator |
| RL+↔RL− | Resistance | *0.7 ~1.1 kΩ | Rear LH speed sensor | FR+↔FR− | Resistance | *0.87 ~1.27 kΩ | Front RH speed sensor |
| SFR↔AST | Resistance | *About 6 Ω | Actuator | AST↔Body ground | Resistance | *About 5 Ω | Actuator |
| MT↔Body ground | Continuity | Continuity | Actuator | MR↔R− | Resistance | *55.8 ~68.2 Ω | Control relay |
| FL+↔FL− | Resistance | *0.87 ~1.27 kΩ | Front LH speed sensor | SRR↔AST | Resistance | *About 6 Ω | Actuator |
| SR↔R− | Resistance | *60~100 Ω | Control relay | | | | |

*: 20°C (68°F)

If the circuit is not as specified, check and repair or replace the trouble part shown in the table above.

(b) Connect the connectors, and install the ECU in place.