OUTPUT SHAFT

COMPONENTS

H150F

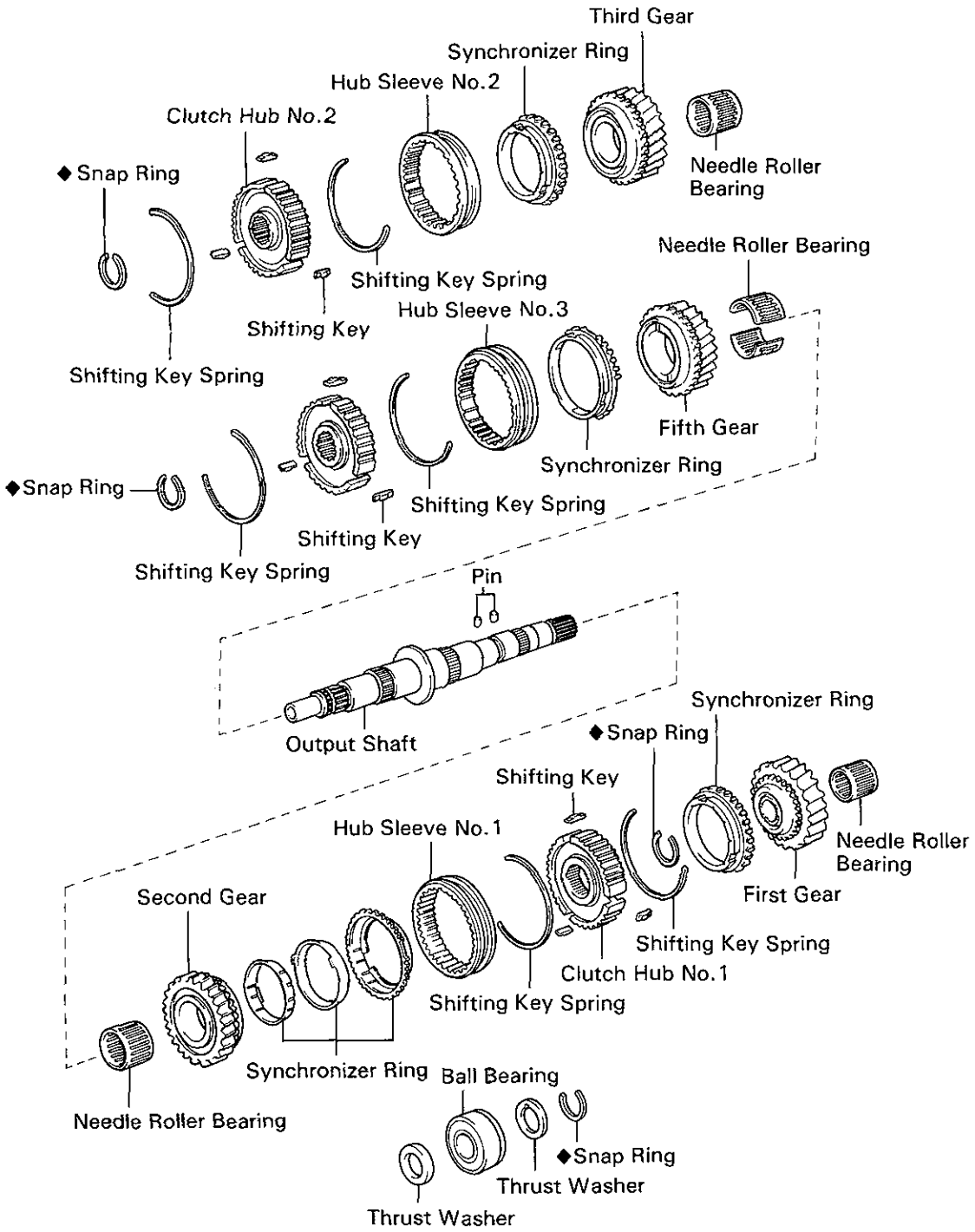

◆ Non-reusable part

Q03128

H151F

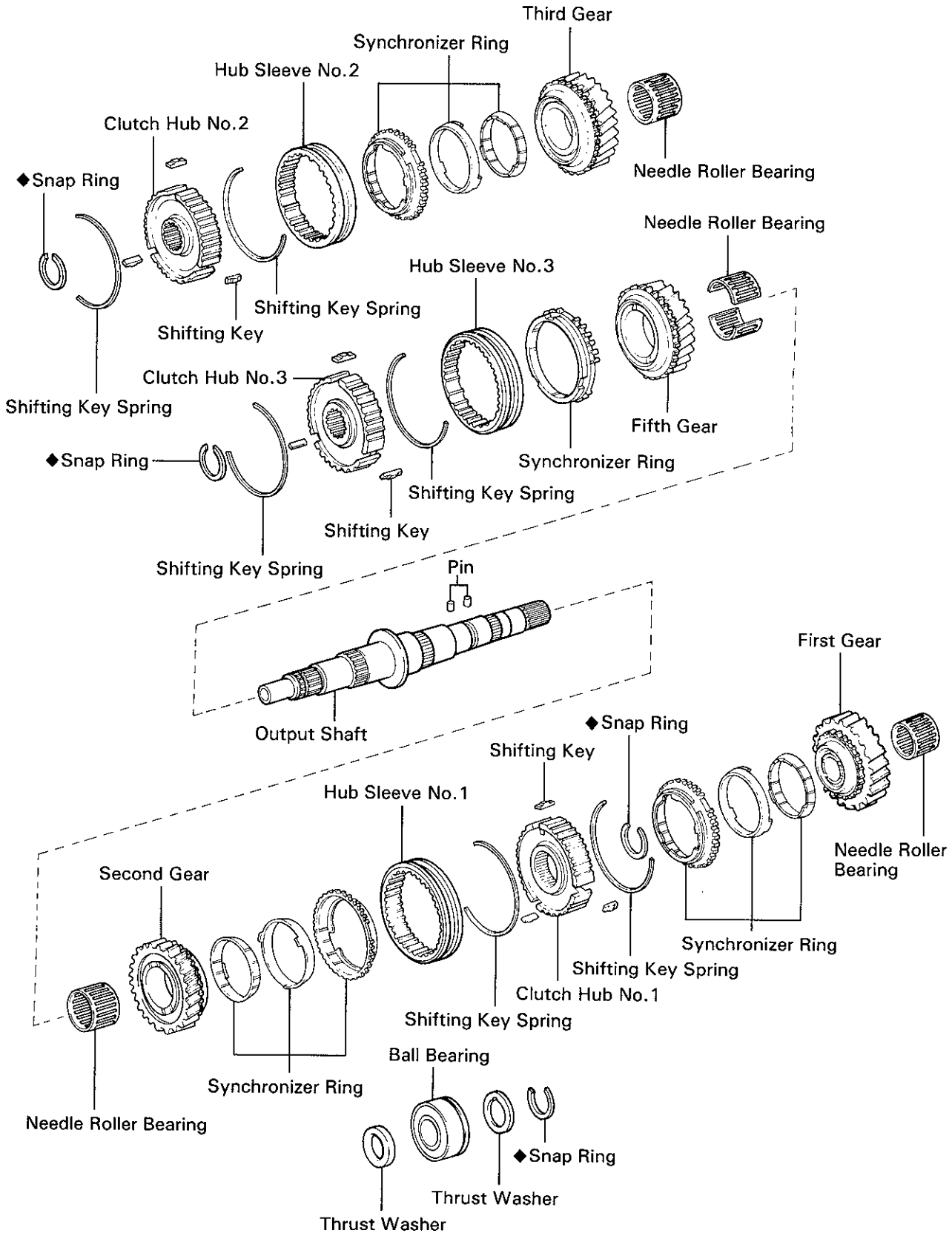

◆ Non-reusable part

HM0527

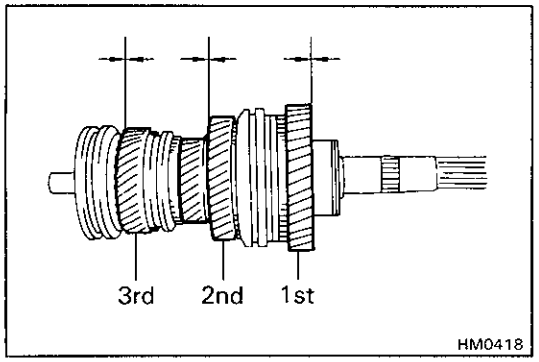

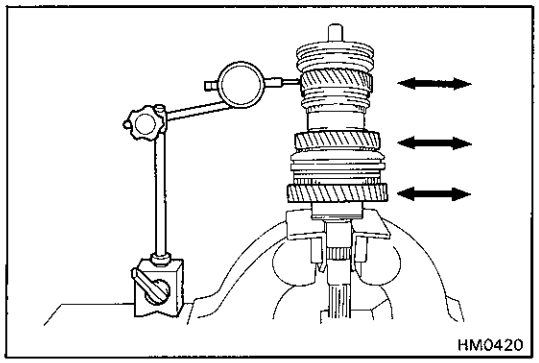

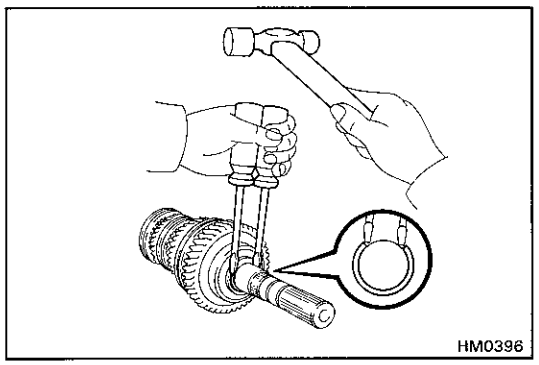

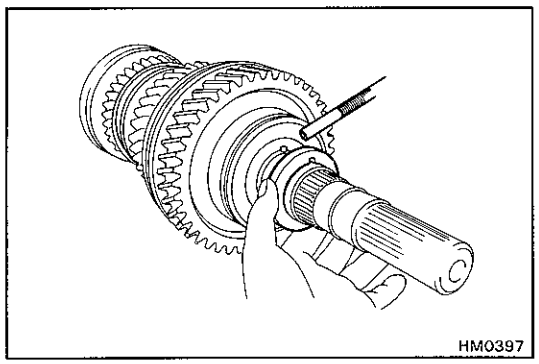

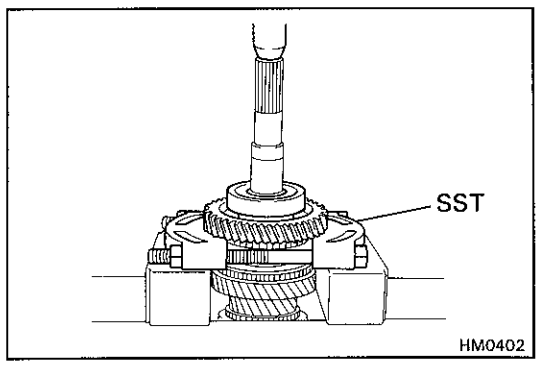

OUTPUT SHAFT DISASSEMBLY

1. **INSPECT EACH GEAR THRUST CLEARANCE**

Measure the thrust clearance of each gear.

Standard clearance:

1st and 3rd gear	**0.1 — 0.45 mm (0.0039 — 0.0177 in.)**
2nd and 5th gear	**0.1 — 0.35 mm (0.0039 — 0.0138 in.)**

Maximum clearance:

1st and 3rd gear	**0.45 mm (0.0177 in.)**
2nd and 5th gear	**0.35 mm (0.0138 in.)**

2. **INSPECT EACH GEAR OIL CLEARANCE**

Using a dial indicator, measure the oil clearance of each gear.

Standard clearance:

1st and 3rd gear	**0.020 — 0.073 mm (0.0008 — 0.0029 in.)**
2nd and 5th gear	**0.015 — 0.068 mm (0.0006 — 0.0027 in.)**

Maximum clearance:

1st and 3rd gear	**0.073 mm (0.0029 in.)**
2nd and 5th gear	**0.068 mm (0.0027 in.)**

3. **REMOVE BALL BEARING AND FIRST GEAR**

(a) Using two screwdrivers and a hammer, drive out the snap ring.

(b) Remove the thrust washer and pin.

(c) Using SST and a press, remove the ball bearing, thrust washer, first gear and synchronizer ring.

H150F — Single Synchronizer ring

H151F — Triple Synchronizer rings

SST 09555-55010

(d) Remove the pin and needle roller bearing.

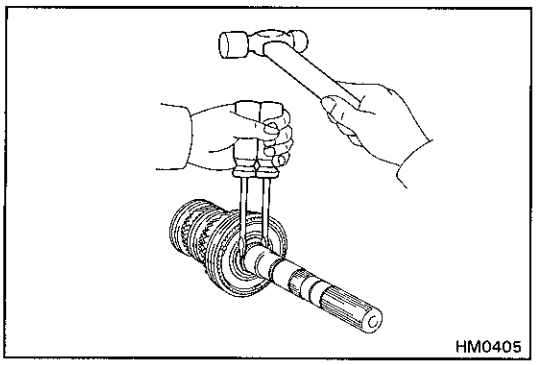
HM0405

4. REMOVE HUB SLEEVE NO.1 ASSEMBLY, SYNCHRONIZER RING, SECOND GEAR AND NEEDLE ROLLER BEARING

(a) Using two screwdrivers and a hammer, drive out the snap ring.

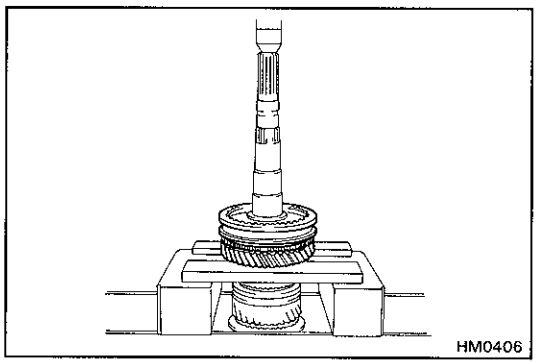
HM0406

(b) Using a press, remove the hub sleeve No.1 assembly, synchronizer rings, and second gear.

(c) Remove the needle roller bearing.

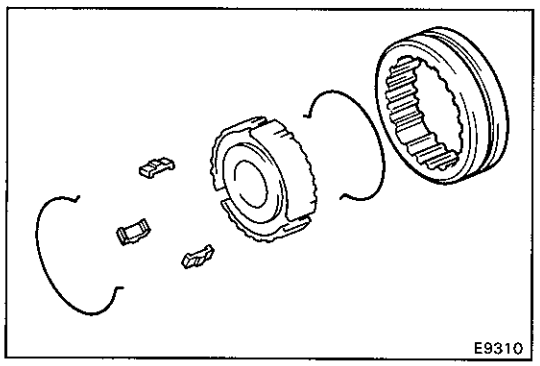
E9310

5. REMOVE HUB SLEEVE NO.1, SHIFTING KEYS AND SPRINGS FROM CLUTCH HUB NO.1

Using a screwdriver, remove the three shifting keys and two springs from the clutch hub No.1.

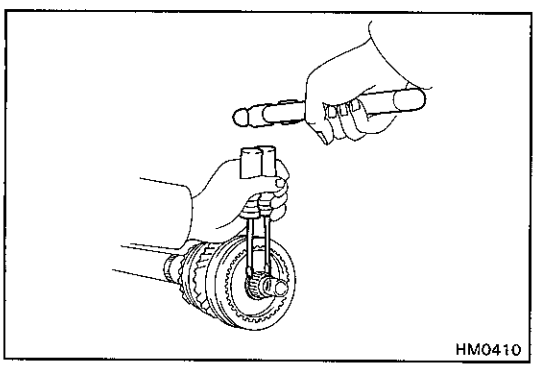
HM0410

6. REMOVE HUB SLEEVE NO.2 ASSEMBLY, SYNCHRONIZER RING, THIRD GEAR AND NEEDLE ROLLER BEARING

(a) Remove two screwdrivers and a hammer, drive out the snap ring.

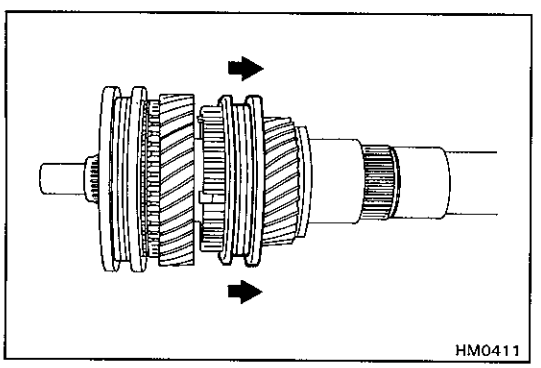
HM0411

(b) Shift hub sleeve No.3 onto the fifth gear.

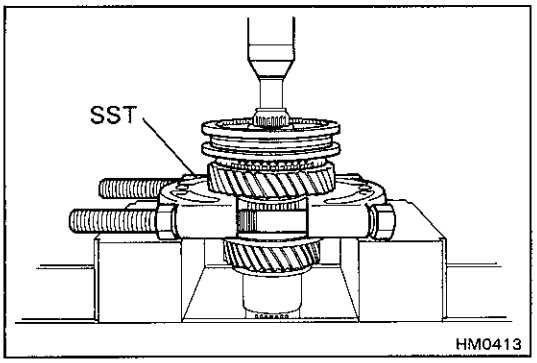

(c) Using SST and a press, remove the hub sleeve No.2 assembly, synchronizer ring and third gear.

H150F — Single Synchronizer ring

H151F — Triple Synchronizer rings

SST 09555-55010

(d) Remove the needle roller bearing.

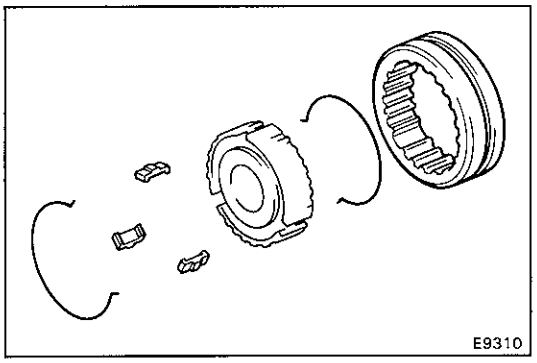

7. REMOVE HUB SLEEVE NO.2, SHIFTING KEYS AND SPRINGS FROM CLUTCH HUB NO.2

Using a screwdriver, remove the three shifting keys and two springs from the clutch hub No.2.

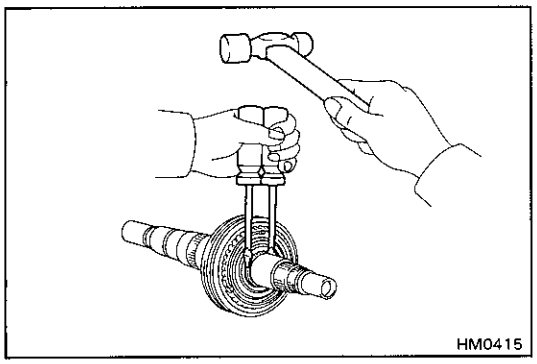

8. REMOVE HUB SLEEVE NO.3 ASSEMBLY, SYNCHRONIZER RING, FIFTH GEAR AND NEEDLE ROLLER BEARING

(a) Using two screwdriver, and a hammer, drive out the snap ring.

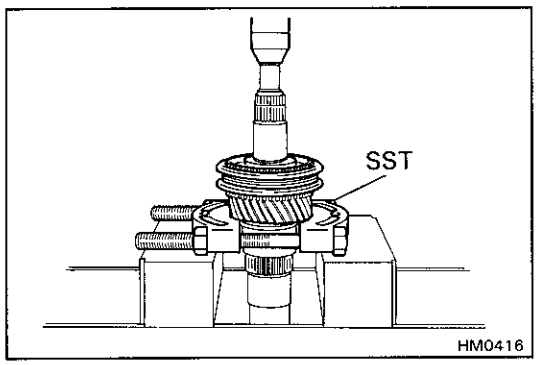

(b) Using SST and a press, remove the hub sleeve No.3 assembly and synchronizer ring.

SST 09950-00020

(c) Remove the needle roller bearing.

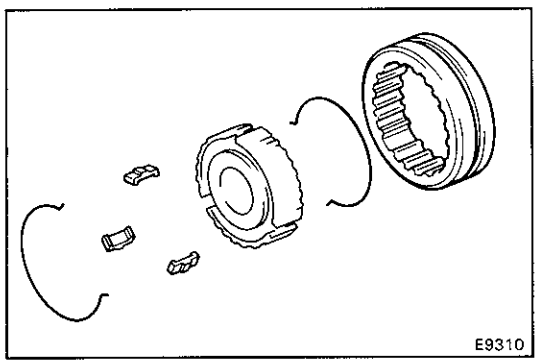

9. REMOVE HUB SLEEVE NO.3 SHIFTING KEYS AND SPRINGS FROM CLUTCH HUB NO.3

Using a screwdriver, remove the three shifting keys and two springs from the clutch hub No.3.

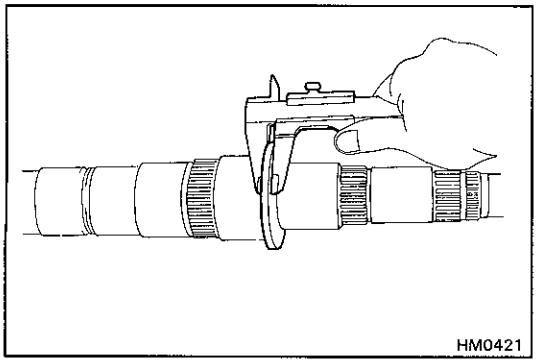
HM0421

OUTPUT SHAFT ASSEMBLY INSPECTION

1. INSPECT OUTPUT SHAFT

(a) Using calipers, measure the output shaft flange thickness.

Minimum thickness:
4.725 mm (0.1860 in.)

If the thickness is less than the minimum, replace the output shaft.

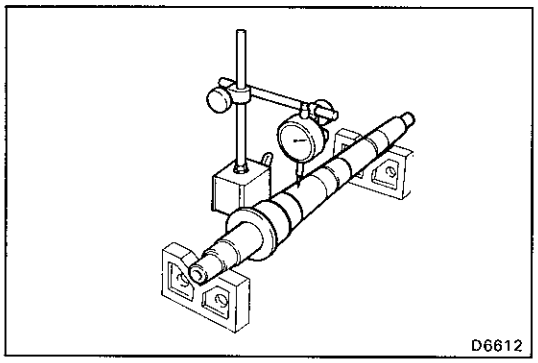
D6612

(b) Using a dial indicator, check the shaft runout.

Maximum runout:
0.03 mm (0.0020 in.)

If the runout exceeds the maximum, replace the output shaft.

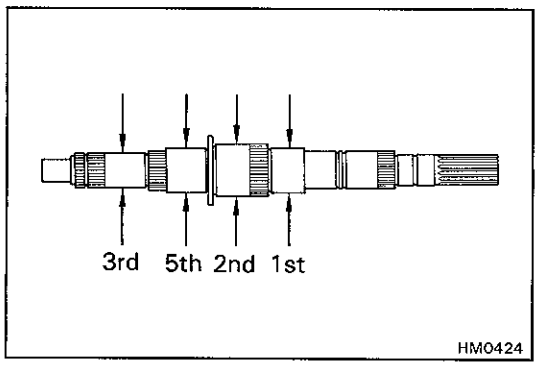

HM0424

(c) Using a micrometer, measure the outer diameter of the output shaft journal.

Minimum outer diameter:

1st	**49.979 mm (1.9677 in.)**
2nd	**57.984 mm (2.2828 in.)**
3rd	**37.979 mm (1.4952 in.)**
5th	**45.984 mm (1.8104 in.)**

If the outer diameter is less than the minimum, replace the output shaft.

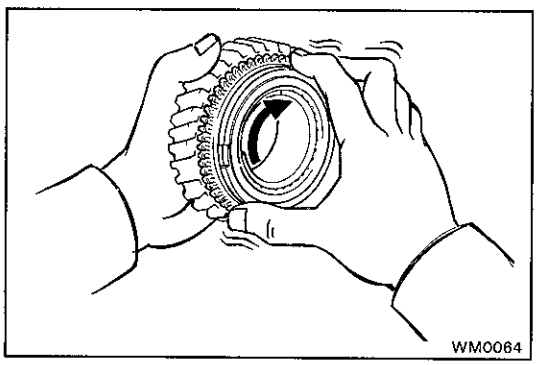
WM0064

2. INSPECT SYNCHRONIZER RINGS

H150F — FOR FIRST, THIRD AND FIFTH GEARS

H151F — FOR FIFTH GEARS

(a) Check for wear or damage.

(b) Check the braking effect of the synchronizer ring. Turn the synchronizer ring in one direction while pushing it to the gear cone and check that the ring is locked. If the braking effect is insufficient, lightly rub the synchronizer ring and gear cone by applying a small amount of fine lapping compound.

NOTICE:

- **Wash off completely the fine lapping compound after rubbing.**
- **Check again the braking effect of the synchronizer ring.**

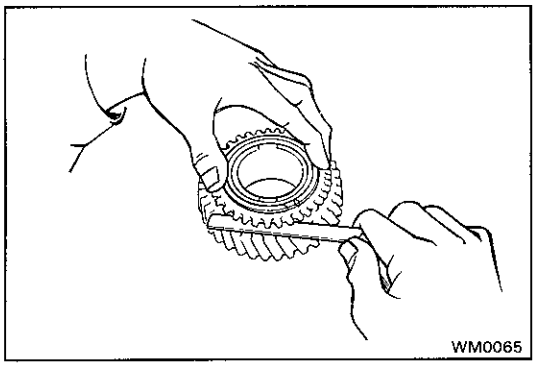
WM0065

(c) Using a feeler gauge, measure the clearance between the synchronizer ring back and the gear spline end.

Minimum clearance:

1st gear	**1.1 mm (0.0433 in.)**
3rd and 5th gear	**0.8 mm (0.0315 in.)**

HINT:

- When replacing either a synchronizer ring or gear, apply a small amount of fine lapping compound between the synchronizer ring and gear cone.Lightly rub the synchronizer ring and gear together.
- When replacing both the synchronizer ring and gear, there is no need to apply any compound or to rub them together.

NOTICE: Wash off completely the fine lapping compound after rubbing.

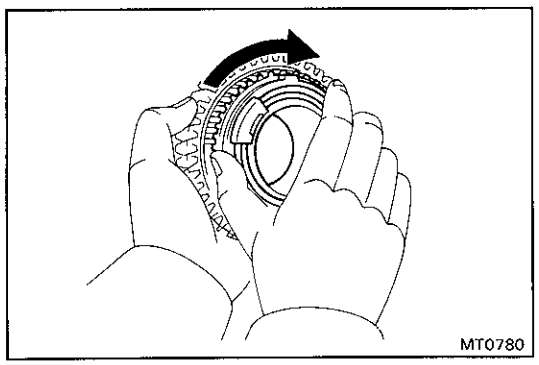
MT0780

3. INSPECT SYNCHRONIZER RING

H150F — FOR SECOND GEARS

H151F — FOR FIRST SECOND AND THIRD GEARS

(a) Check for wear or damage.

(b) Check the braking effect of the synchronizer direction while pushing it to the gear cone and check that the ring is locked. If the braking effect is insufficient, replace the synchronizer ring.

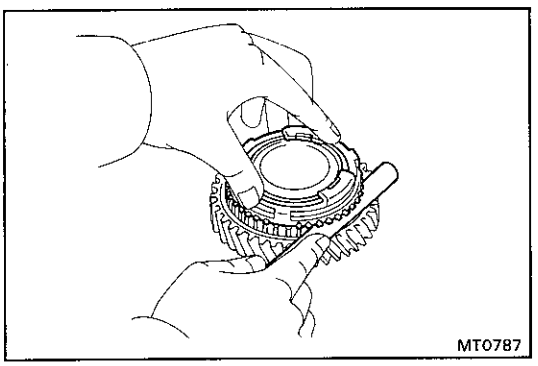
MT0787

(c) Measure the clearance between the synchronizer ring back and gear spline end.

Minimum clearance:

1st and 2nd gear	**0.85 mm (0.0335 in.)**
3rd gear	**0.75 mm (0.0295 in.)**

If the clearance is less than the limit, replace the synchronizer ring.

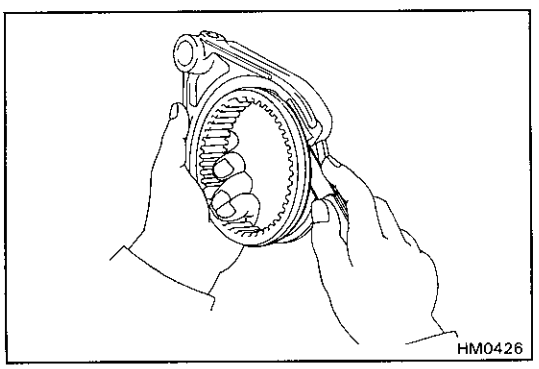
HM0426

4. INSPECT CLEARANCE OF SHIFT FORKS AND HUB SLEEVES

Using a feeler gauge, measure the clearance between the hub sleeve and shift fork.

Maximum clearance:

0.35 mm (0.0138 in.)

If the clearance exceeds the maximum, replace the shift fork or hub sleeve.

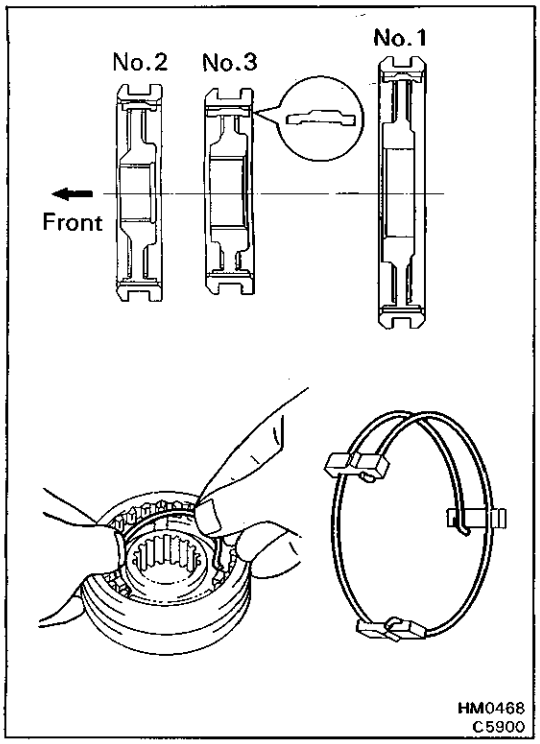

OUTPUT SHAFT ASSEMBLY

1. INSTALL CLUTCH HUB NO.1, NO.2 AND NO.3 INTO HUB SLEEVE

(a) Install the clutch hub and shifting keys to the hub sleeve.

(b) Install the springs under the shifting keys.

NOTICE: Install the key springs positioned so that their end gaps are not in line.

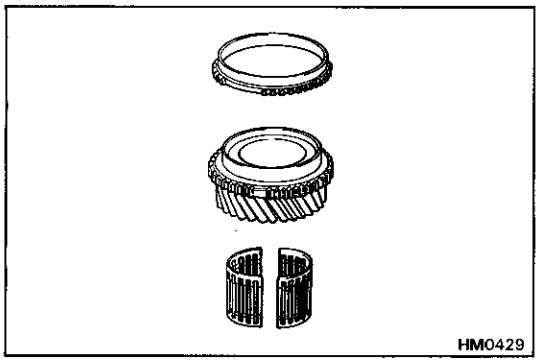

2. INSTALL FIFTH GEAR AND HUB SLEEVE NO.3 ASSEMBLY ON OUTPUT SHAFT

(a) Apply gear oil to the shaft and needle roller bearing.

(b) Place the synchronizer ring on the gear and align the ring slots with the shifting keys.

(c) Install the needle roller bearing in the fifth gear.

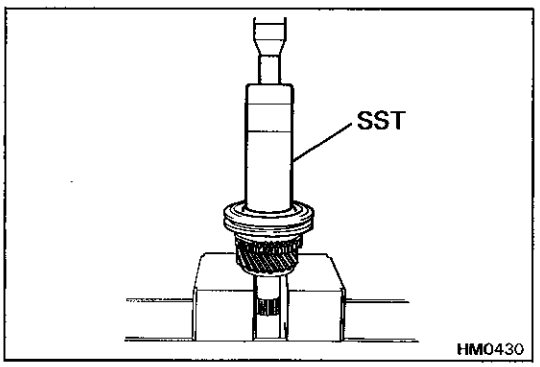

(d) Using SST and a press, install the fifth gear and hub sleeve No.3.

SST 09316-60010 (09316-00010)

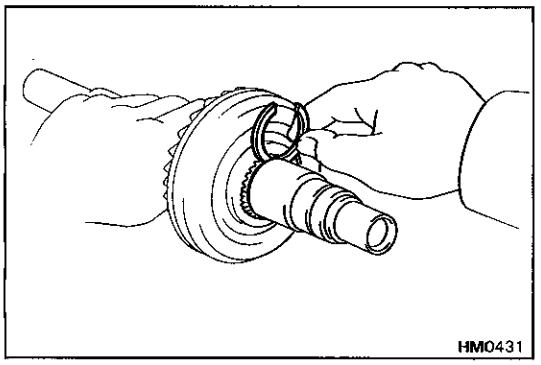

3. INSTALL SNAP RING

(a) Select a snap ring that will allow minimum axial play.

Mark	Thickness mm (in.)
A	2.40 — 2.45 (0.0945 — 0.0965)
B	2.45 — 2.50 (0.0965 — 0.0984)
C	2.50 — 2.55 (0.0984 — 0.1004)
D	2.55 — 2.60 (0.1004 — 0.1024)
E	2.60 — 2.65 (0.1024 — 0.1044)
F	2.65 — 2.70 (0.1044 — 0.1063)

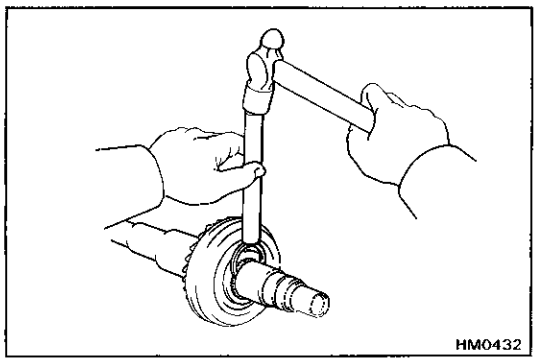
HM0432

(b) Using a brass bar and hammer, drive in the snap ring.

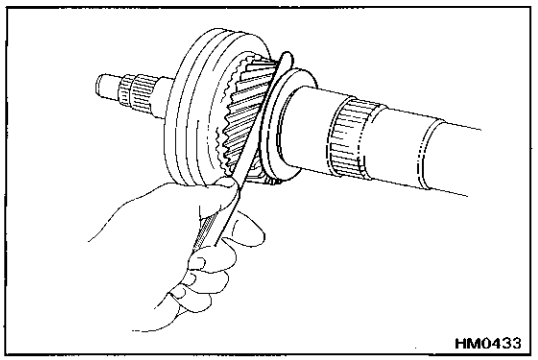
HM0433

4. INSPECT FIFTH GEAR THRUST CLEARANCE

Using a feeler gauge, measure the fifth gear thrust clearance.

Standard clearance:
0.1 — 0.35 mm (0.0039 — 0.0138 in.)

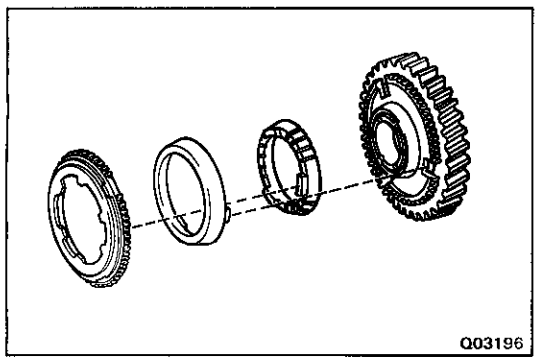
Q03196

5. INSTALL THIRD GEAR AND HUB SLEEVE NO.2 ASSEMBLY

(H151F)

(a) Place the synchronizer rings on the 3rd gear.

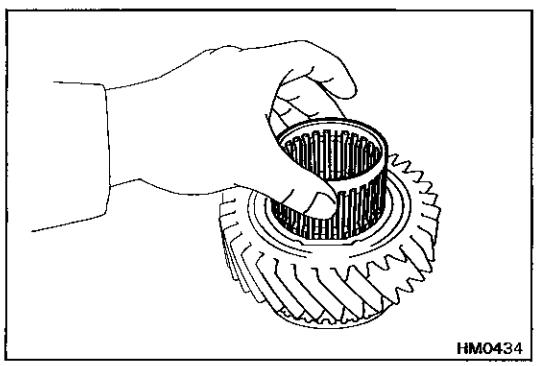
HM0434

(b) Apply gear oil to the shaft and needle roller bearing.

(H150F)

(c) Place the synchronizer ring on the gear and align the ring slots with the shifting keys.

(d) Install the needle roller bearing in the third gear.

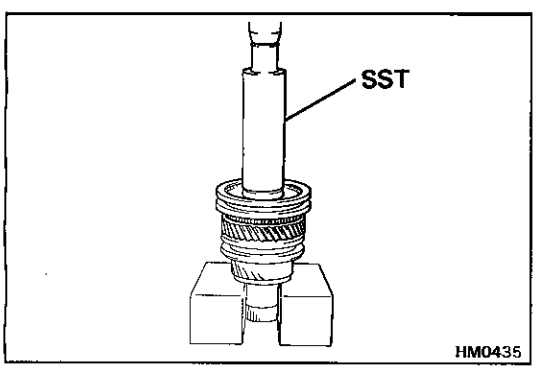

HM0435

(e) Using SST and a press, install the third gear and hub sleeve No.2.

SST 09316-60010 (09316-00010)

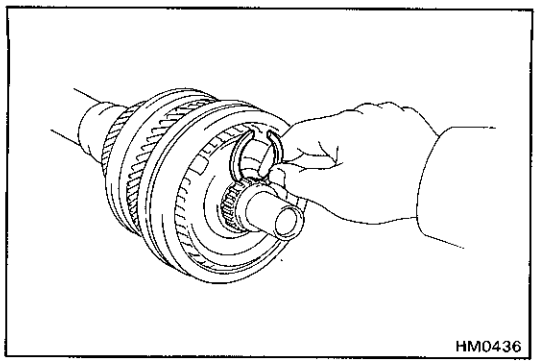
HM0436

6. INSTALL SNAP RING

(a) Select a snap ring that will allow minimum axial play.

Mark	Thickness mm (in.)
4	1.90 — 1.95 (0.0748 — 0.0768)
5	1.95 — 2.00 (0.0768 — 0.0787)
6	2.00 — 2.05 (0.0787 — 0.0807)
7	2.05 — 2.10 (0.0807 — 0.0827)
8	2.10 — 2.15 (0.0827 — 0.0847)
9	2.15 — 2.20 (0.0847 — 0.0866)

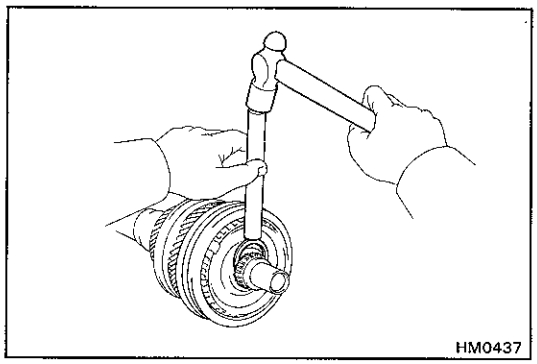
HM0437

(b) Using a brass bar and a hammer, drive in a new snap ring.

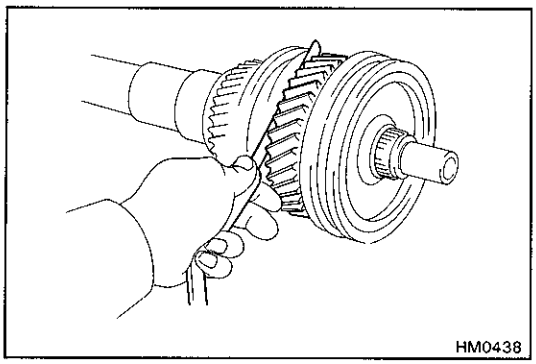
HM0438

7. MEASURE THIRD GEAR THRUST CLEARANCE

Using a feeler gauge, measure the third gear thrust clearance.

Standard clearance:
0.1 — 0.45 mm (0.0039 — 0.0138 in.)

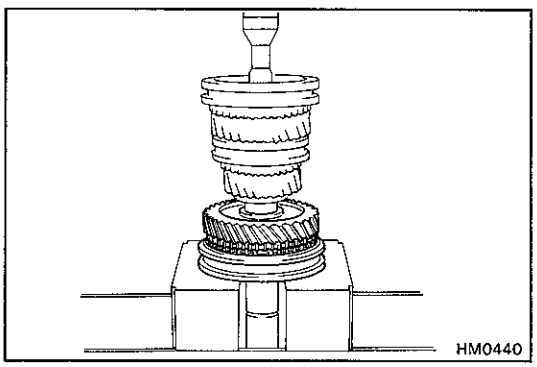
HM0440

8. INSTALL SECOND GEAR AND HUB SLEEVE NO.1 ASSEMBLY

(a) Apply gear oil to the shaft and needle roller bearing.

(b) Place the synchronizer rings on the gear and align the ring slots with the shifting keys.

(c) Install the needle roller bearing in the second gear.

(d) Using a press, install the second gear and hub sleeve No.1 assembly.

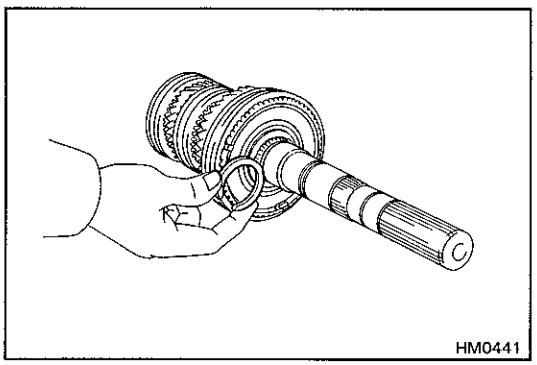
HM0441

9. INSTALL SNAP RING

(a) Select a snap ring that will allow minimum axial play.

Mark	Thickness mm (in.)
A	2.90 — 2.95 (0.1142 — 0.1162)
B	2.95 — 3.00 (0.1162 — 0.1181)
C	3.00 — 3.05 (0.1181 — 0.1201)
D	3.05 — 3.10 (0.1201 — 0.1220)
E	3.10 — 3.15 (0.1220 — 0.1240)
F	3.15 — 3.20 (0.1240 — 0.1260)

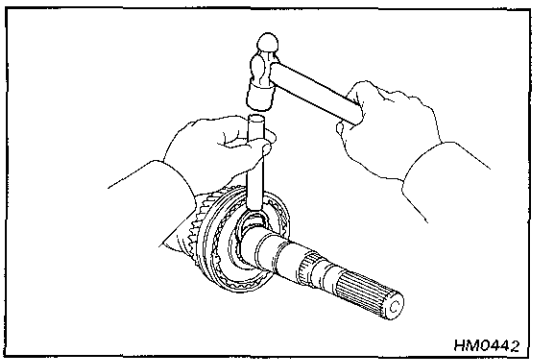

(b) Using a brass bar and a hammer, drive in a new snap ring.

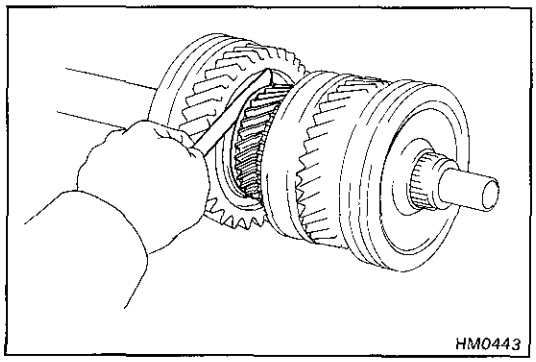

10. INSPECT SECOND GEAR THRUST CLEARANCE

Using a feeler gauge, measure the second gear thrust clearance.

Standard clearance:
0.1 — 0.35 mm (0.0039 — 0.0138 in.)

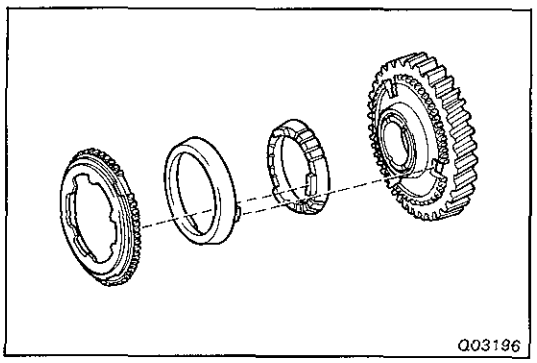

11. INSTALL FIRST GEAR

(H151F)

(a) Place the synchronizer rings on the 1st gear.

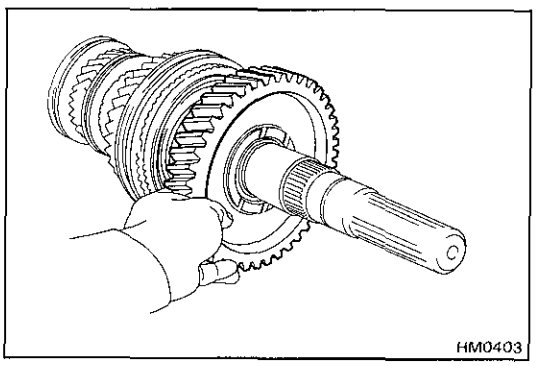

(b) Apply gear oil to the shaft and needle roller bearing.

(H150F)

(c) Place the synchronizer ring on the gear and align the ring slots with the shifting keys.

(d) Install the needle roller bearing in the first gear.

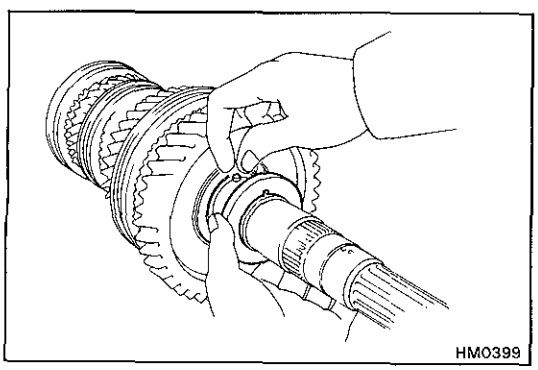

12. INSTALL BALL BEARING

(a) Install the pin and thrust washer.

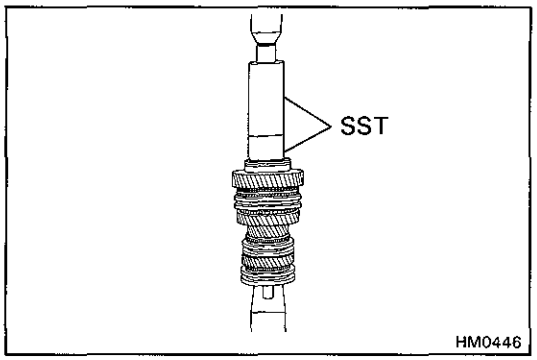

(b) Using SST and a press, install the ball bearing.
SST 09316-60010 (09316-00010), 09523-36010

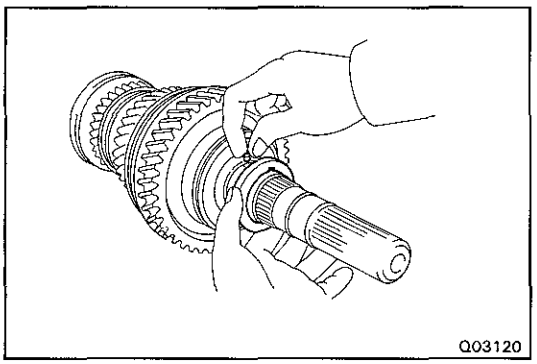

(c) Install the pin and thrust washer.

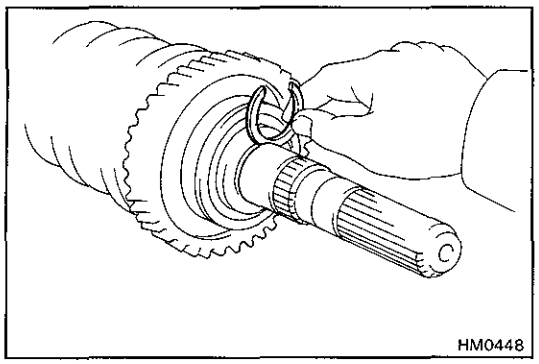

13. INSTALL SNAP RING

(a) Select a snap ring that will allow minimum axial play.

Mark	Thickness mm (in.)
A	2.40 — 2.45 (0.0945 — 0.0965)
B	2.45 — 2.50 (0.0965 — 0.0984)
C	2.50 — 2.55 (0.0984 — 0.1004)
D	2.55 — 2.60 (0.1004 — 0.1024)
E	2.60 — 2.65 (0.1024 — 0.1044)
F	2.65 — 2.70 (0.1044 — 0.1063)
G	2.70 — 2.75 (0.1063 — 0.1083)
H	2.75 — 2.80 (0.1083 — 0.1102)

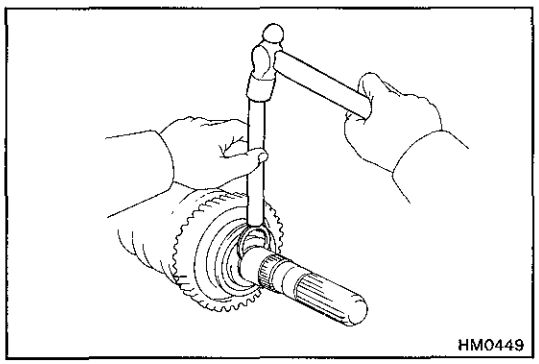

(b) Using a brass bar and a hammer, drive in a new snap ring.