PROPELLER SHAFT

COMPONENTS

• **Front Propeller Shaft**

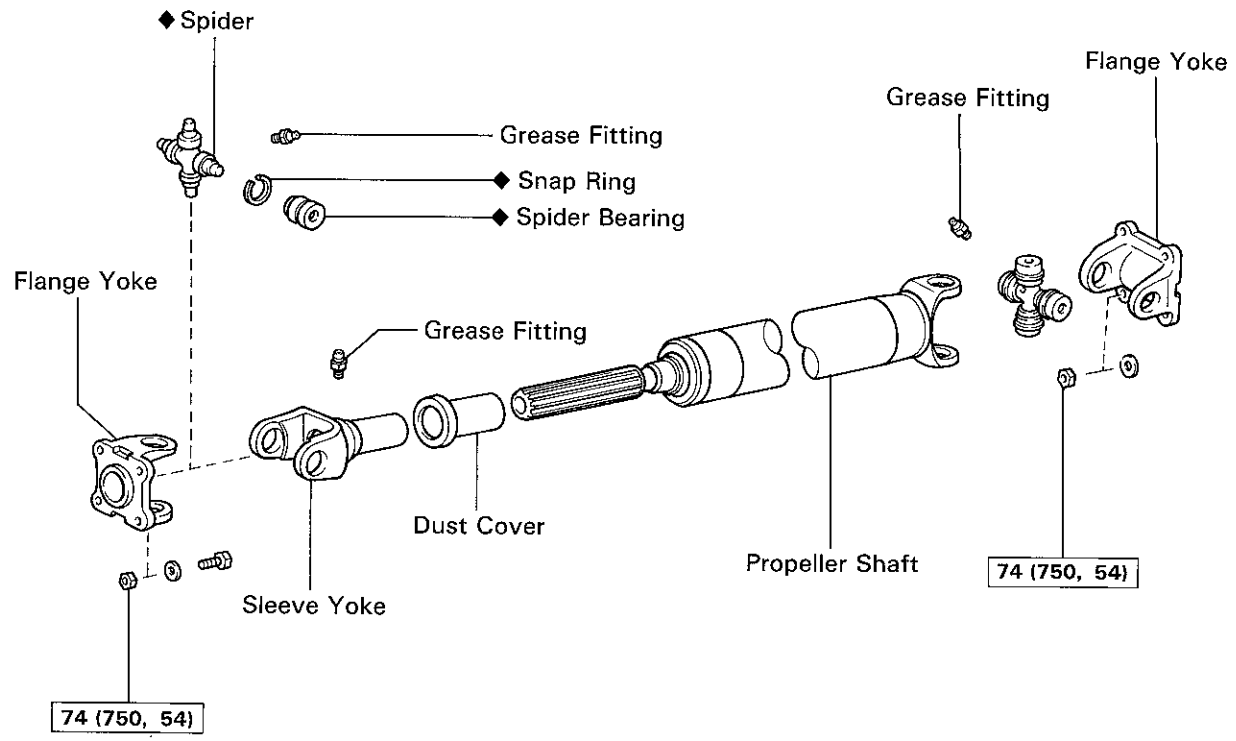

N·m (kgf·cm, ft·lbf) : Specified torque

◆ Non-reusable part

R05333

PROPELLER SHAFT ASSEMBLY

HINT: When replacing the spider, be sure that the grease fitting assembly hole is facing in the direction shown in the illustration.

SPIDER GREASE FITTING ASSEMBLY DIRECTION

Front Propeller Shaft

