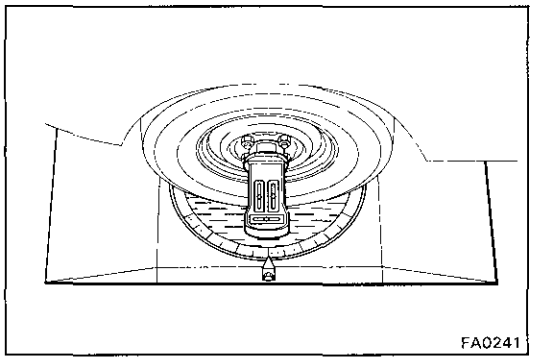
FA0241

FRONT WHEEL ALIGNMENT

1. INSTALL WHEEL ALIGNMENT EQUIPMENT

Follow the specific instructions of the equipment manufacturer.

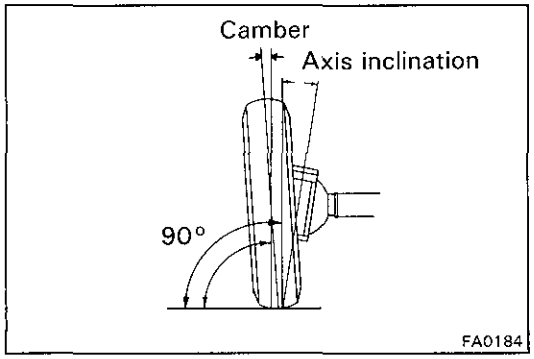

FA0184

2. INSPECT CAMBER AND STEERING AXIS INCLINATION

Camber:

1°00′ ± 45′ (1.00° ± 0.75°)

Cross camber:

30′ or less (0.50° or less)

Steering axis inclination:

13°00′ ± 45′ (13.00° ± 0.75°)

If the steering axis inclination is not as specified after camber have been correctly adjusted, recheck the steering knuckle and front wheel for bending or looseness.

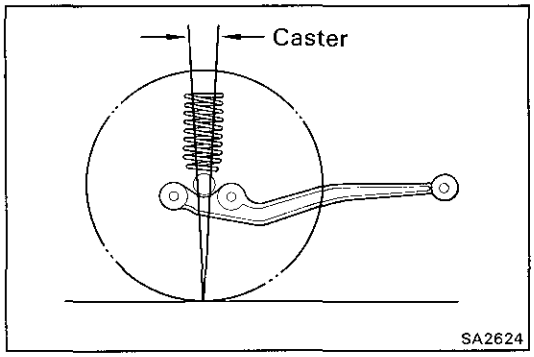

SA2624

3. INSPECT CASTER

3°00′ ± 1° (3.00° ± 1°)

If caster is not as specified, inspect and replace damaged or worn parts.

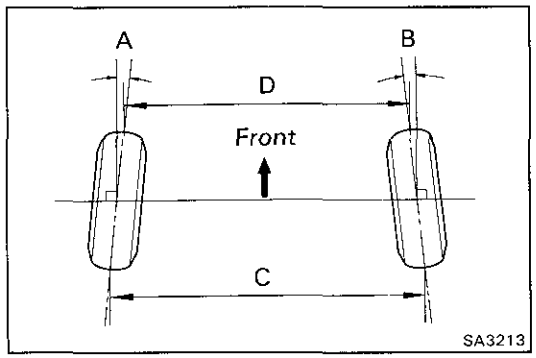

SA3213

4. INSPECT TOE-IN

Toe-in (total):

Tire type	A + B	C – D
Bias tire	0°24′ ± 0°12′ (0.4° ± 0.2°)	4 ± 2 mm (0.16 ± 0.08 in.)
Radial tire	0°12′ ± 0°12′ (0.2° ± 0.2°)	2 ± 2 mm (0.08 ± 0.08 in.)

If toe-in is not specification, adjust by tie rod.

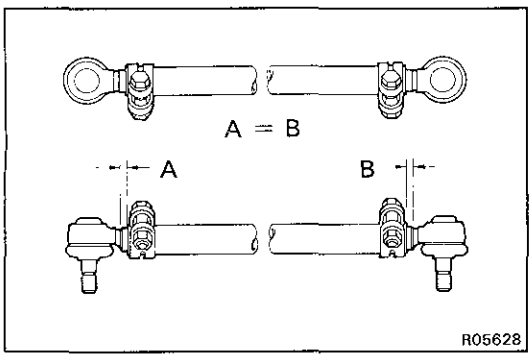

R05628

5. ADJUST TOE-IN

(a) Loosen the clamp bolts and nuts.

(b) Adjust toe-in to the correct value by turning the tie rod.

(c) Insure that the lengths of the tie rod ends are the same.

(d) Torque the tie rod clamp bolts and nuts.

Torque: 37 N·m (375 kgf·cm, 27 ft·lbf)

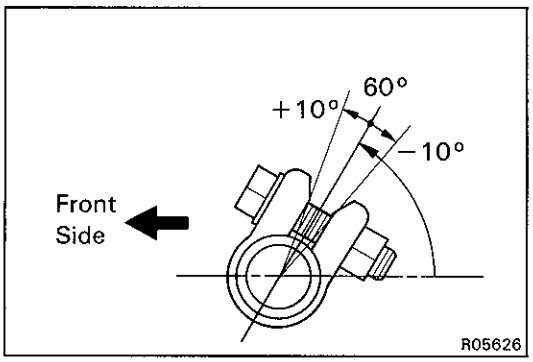

HINT: The clamps opening must be positioned at the rear of the tie rod and and face within 60° ± 10° from the verticle axis.

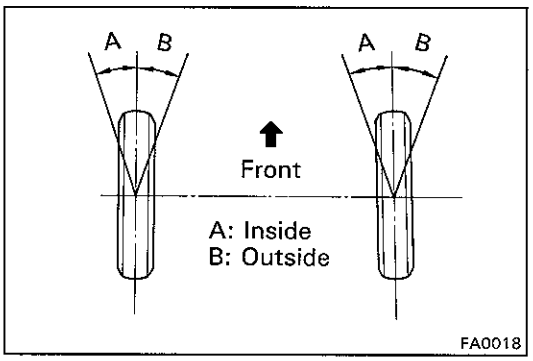

6. INSPECT WHEEL ANGLE

Remove the caps of the knuckle stopper bolts and check the steering angles.

Wheel angle:

Wheel angle (Max.)		
Inside wheel	w/ Power steering	35° $^{+0°}_{-3°}$
	w/o Power steering	32° $^{+0°}_{-3°}$
Outside wheel (reference)	w/ Power steering	31°
	w/ Power steering	29°

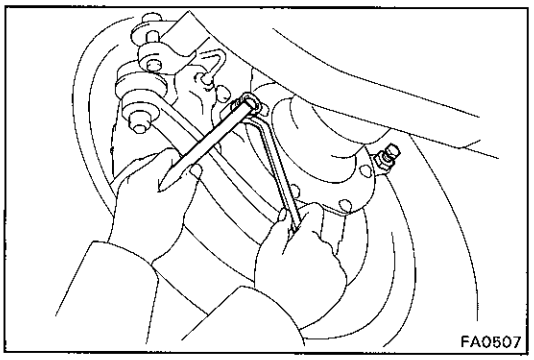

HINT: When the steering wheel is fully turned, make sure that the wheel is not touching the body or brake flexible hose.

If maximum steering angles differ from the standard value, adjust the wheel angle with the knuckle stopped bolts.

Torque: 44 N·m (450 kgf·cm, 33 ft·lbf)

If the wheel angle still cannot be adjusted within limits, inspect and replace damaged or worn steering parts.