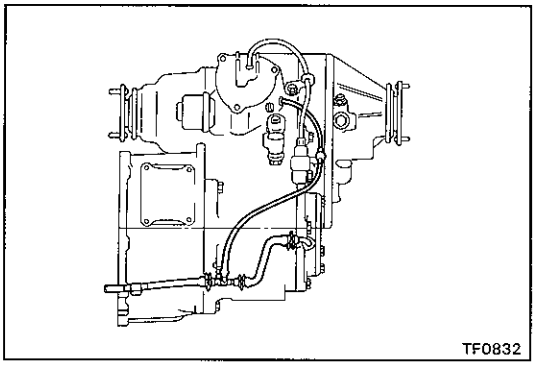

TRANSFER DISASSEMBLY

(See page TR-4)

1. REMOVE BREATHER HOSE

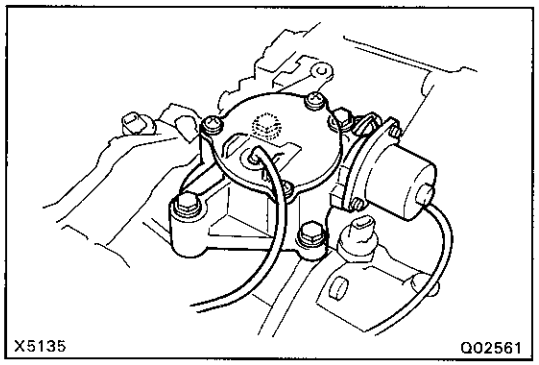

2. REMOVE MOTOR ACTUATOR

Remove the four bolts and motor actuator.

HINT: Remove the motor actuator in differential lock condition.

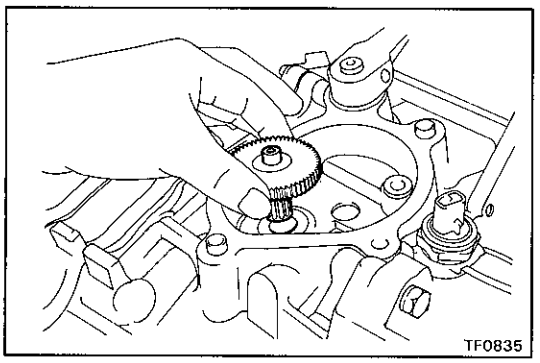

3. REMOVE OUTPUT GEAR

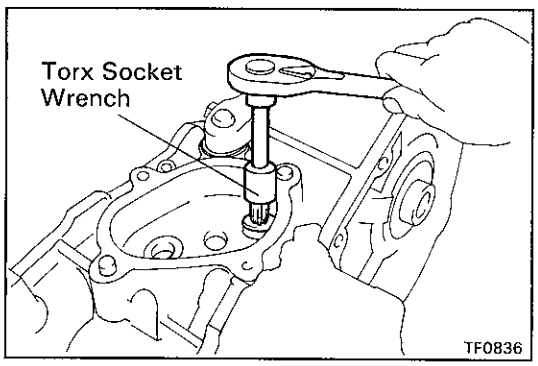

4. REMOVE SCREW PLUG, SPRING AND BALL

(a) Using a torx socket wrench, remove the screw plug. (Torx socket wrench T40 09042-00020)

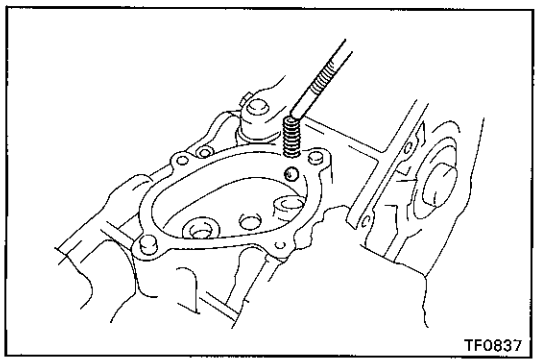

(b) Using a magnetic finger, remove the spring and ball.

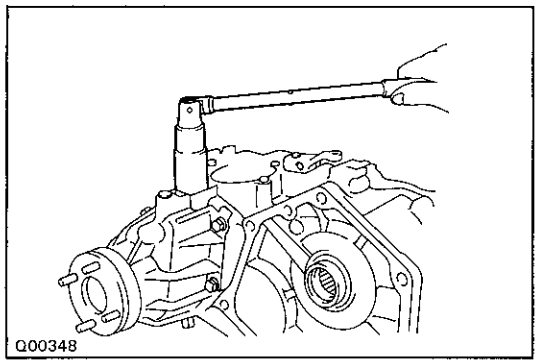

5. REMOVE TRANSFER INDICATOR SWITCHES

Remove the Center Diff Lock indicator switch, L4 position switch and neutral position switch.

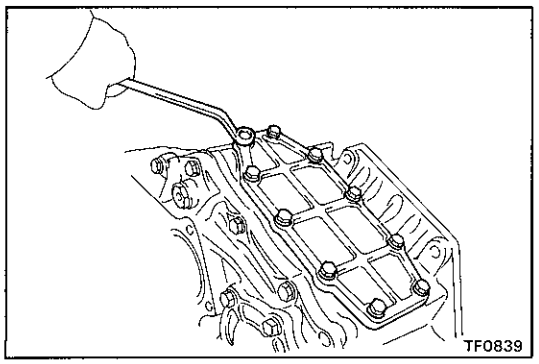

6. (w/o POWER TAKE-OFF)
REMOVE POWER TAKE-OFF COVER

Remove the ten bolts, power take-off cover and gasket.

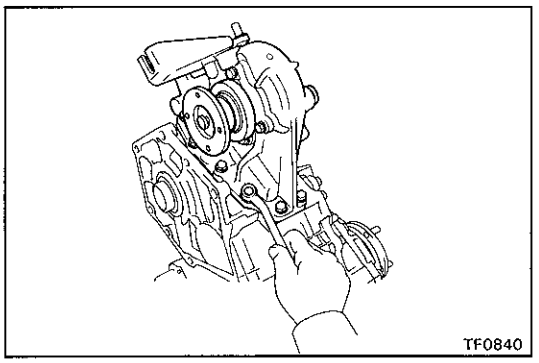

7. (w/ POWER TAKE-OFF)
REMOVE POWER TAKE-OFF CASE

Remove the ten bolts, power take-off case and gasket.

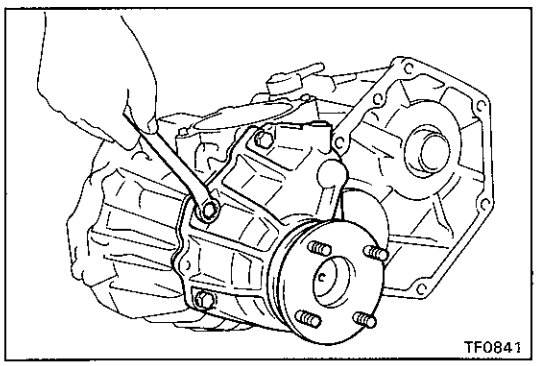

8. REMOVE FRONT EXTENSION HOUSING

(a) Remove the six bolts.

(b) If necessary, tap the front extension housing with a plastic hammer.

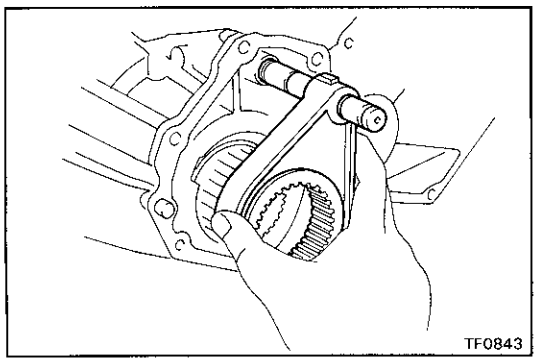

9. REMOVE CLUTCH SLEEVE, SHIFT FORK NO.2 AND FORK SHAFT

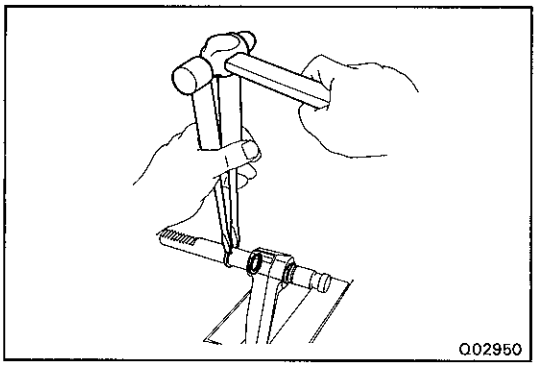

10. SEPARATE SHIFT FORK NO.2 AND FORK SHAFT

(a) Using two screwdrivers and a hammer, tap out the three snap rings.

(b) Separate the shift fork No.2 and fork shaft.

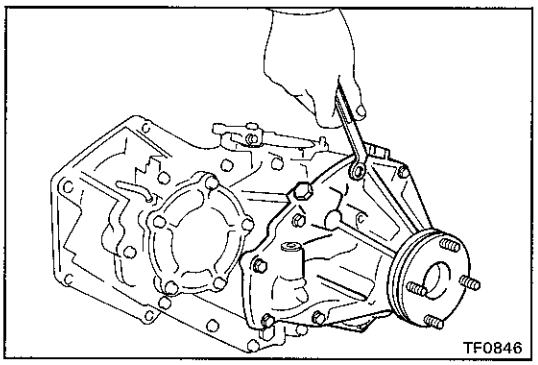

11. REMOVE REAR EXTENSION HOUSING

Remove the nine bolts and rear extension housing.

HINT: If necessary, tap the rear extension housing with a plastic hammer.

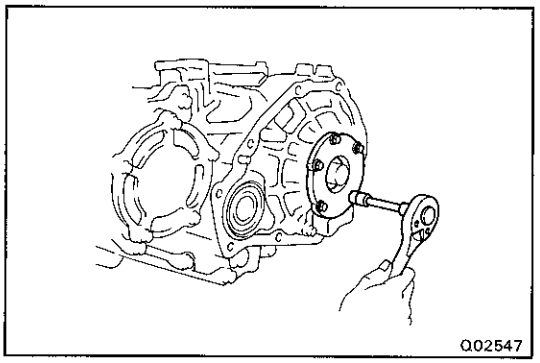

12. REMOVE RETAINER

Remove the five bolts and retainer.

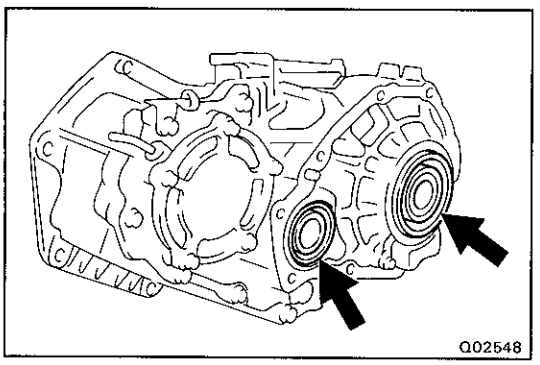

13. REMOVE ADJUSTING SHIMS

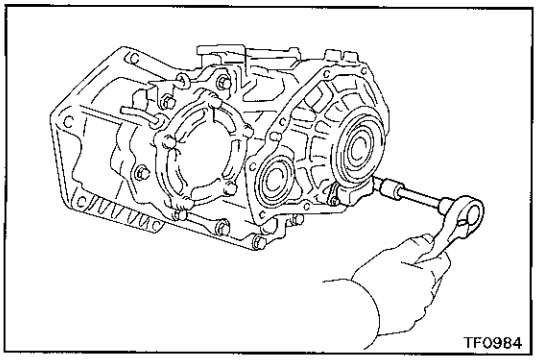

14. REMOVE OIL STRAINER FROM REAR CASE

Remove the two set bolts and oil strainer.

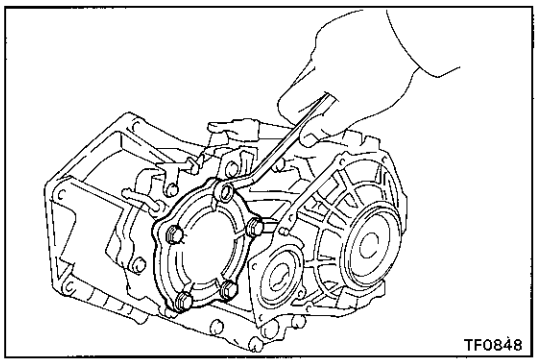

15. REMOVE CASE COVER

(a) Remove the five bolts.

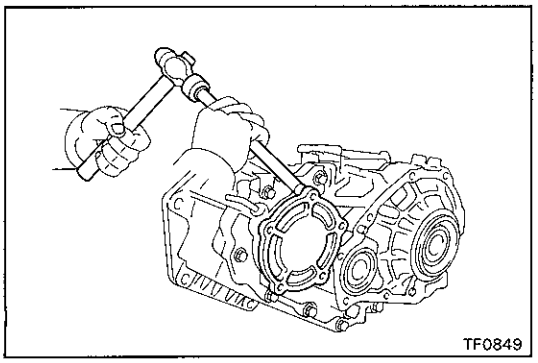

(b) Using a brass bar and hammer, tap the case cover and remove it.

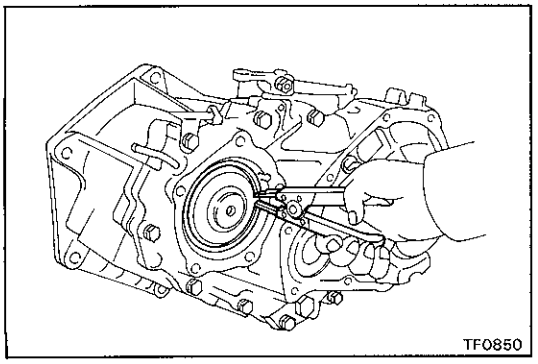

16. SEPARATE FRONT CASE AND REAR CASE

(a) Using snap ring pliers, remove the snap ring.

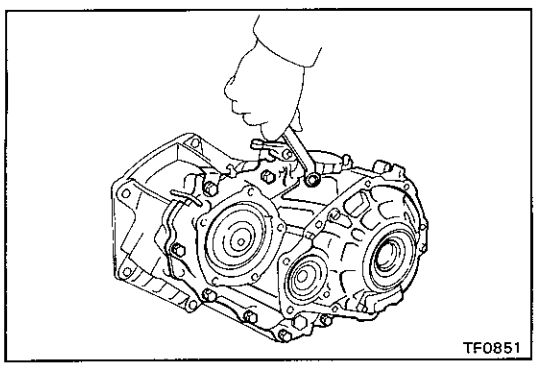

(b) Remove the eight bolts.

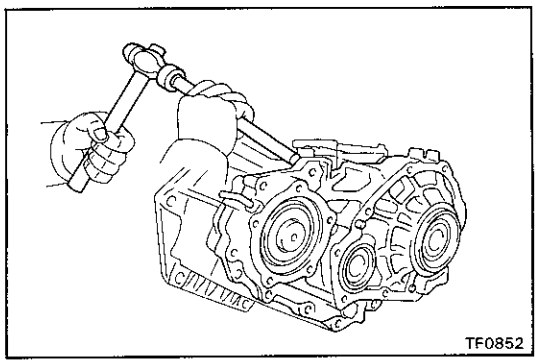

(c) Using a brass bar and hammer, tap the rear case and separate it.

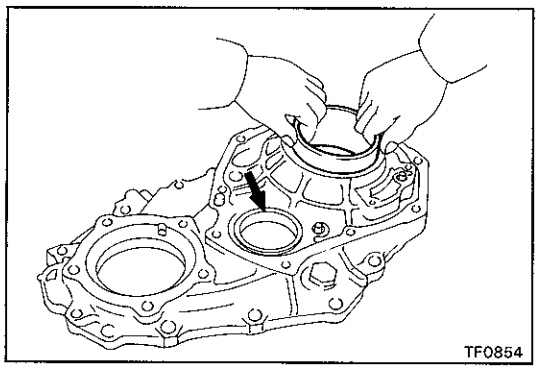

17. REMOVE TWO BEARING RACES FROM REAR CASE

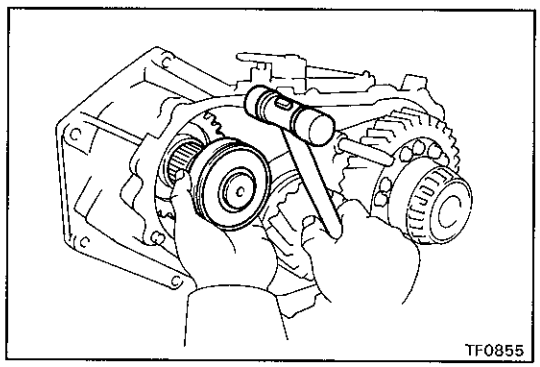

18. REMOVE INPUT SHAFT ASSEMBLY

Using a plastic hammer, remove the input shaft assembly.

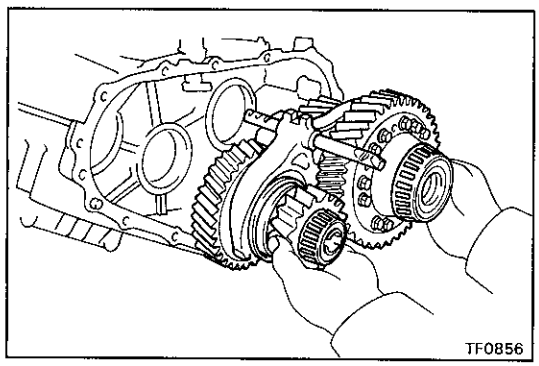

19. REMOVE IDLE GEAR ASSEMBLY, CENTER DIFFERENTIAL ASSEMBLY AND HIGH AND LOW SHIFT FORK ASSEMBLY

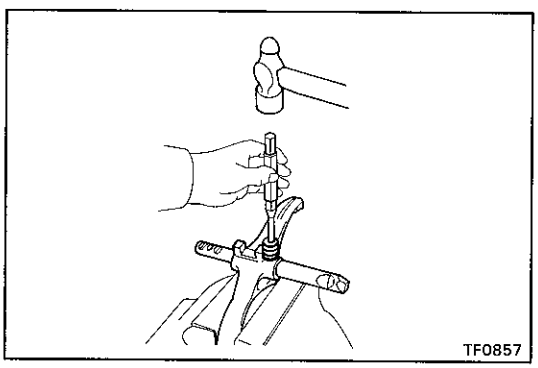

20. SEPARATE SHIFT FORK NO.1 AND FORK SHAFT

(a) Using a pin punch and hammer, drive out the slotted spring pin.

(b) Separate the shift fork No.1 and fork shaft.

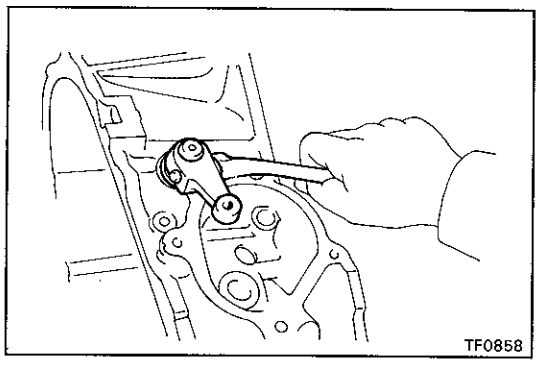

21. REMOVE SHIFT OUTER LEVER AND INNER LEVER

(a) Remove the nut and washer.

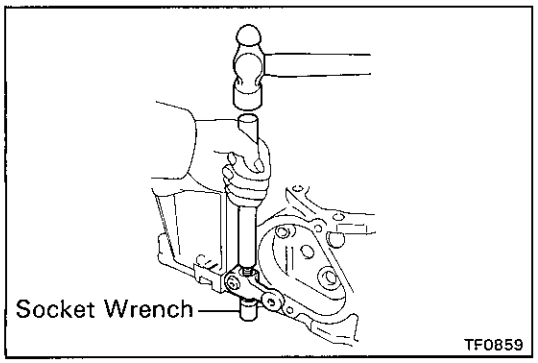

(b) Using a brass bar, hammer and socket wrench, tap out the lever lock pin.

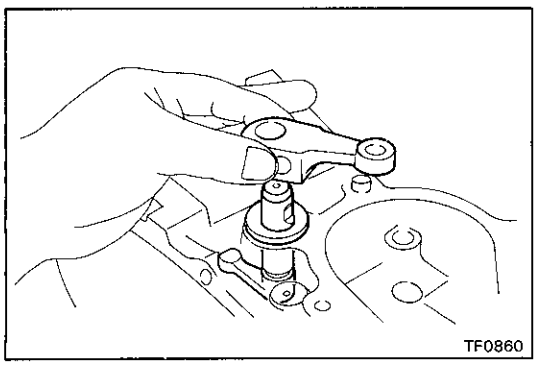

(c) Remove the shift outer lever and inner lever.

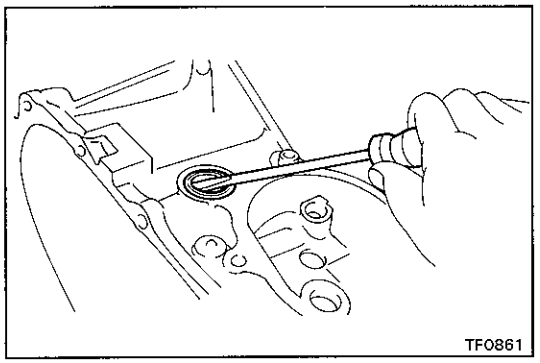

22. IF NECESSARY, REPLACE SHIFT LEVER OIL SEAL

(a) Using a screwdriver, pry out the oil seal.

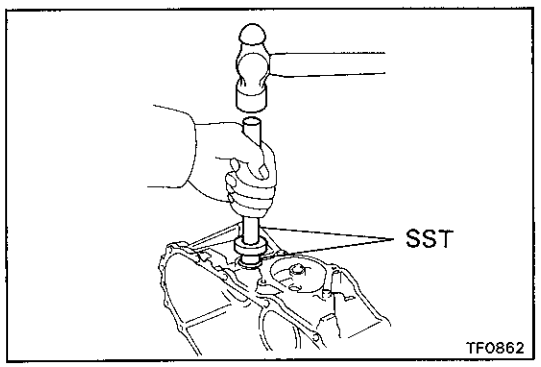

(b) Using SST and a hammer, drive in a new oil seal.

SST 09608-20012 (09608-00080, 09608-03020)

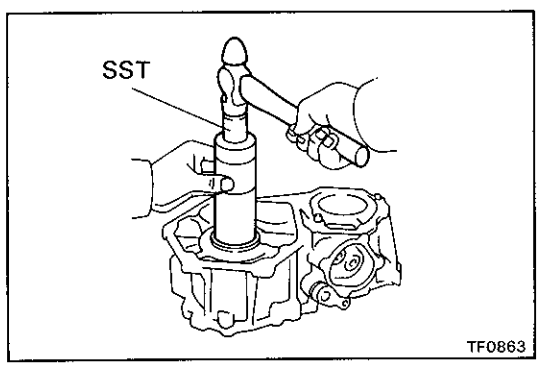

23. IF NECESSARY, REPLACE INPUT SHAFT OIL SEAL

(a) Using SST and a hammer, drive out the oil seal.

SST 09316-60010 (09316-00010)

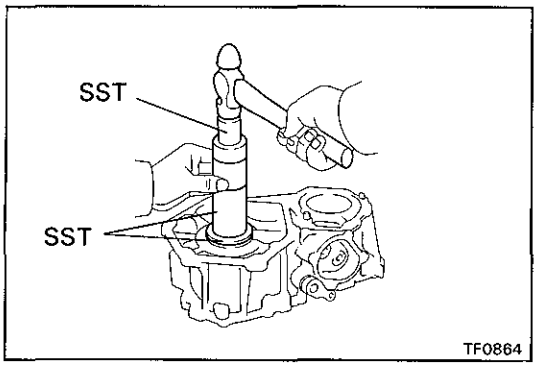

(b) Using SST and a hammer, drive in a new oil seal.
SST 09316-60010 (09316-00010, 09316-00030)

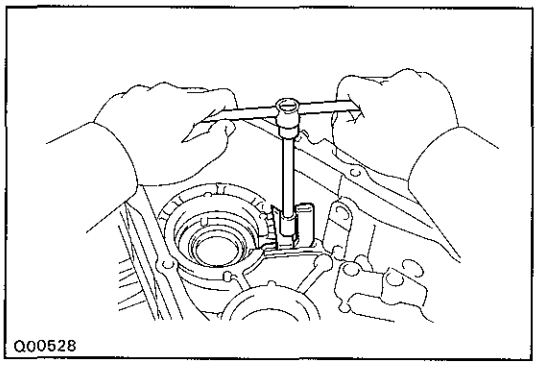

24. REMOVE OIL RECEIVER FROM FRONT CASE

Remove the set bolt and oil receiver.

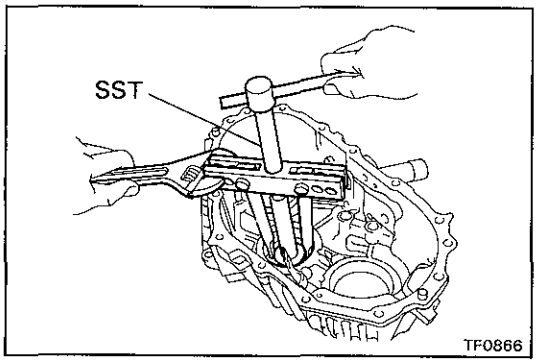

25. REMOVE TWO BEARING RACES FROM FRONT CASE

(a) Using SST, remove the bearing race.
SST 09950-20017

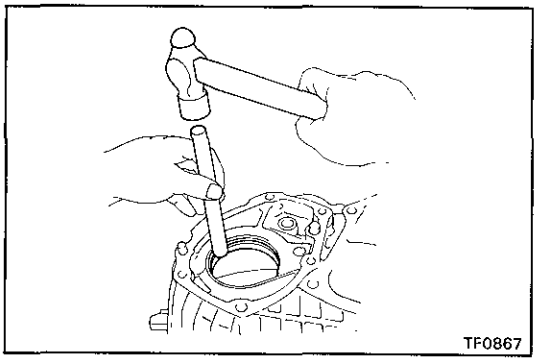

(b) Using a brass bar and hammer, remove the bearing race.

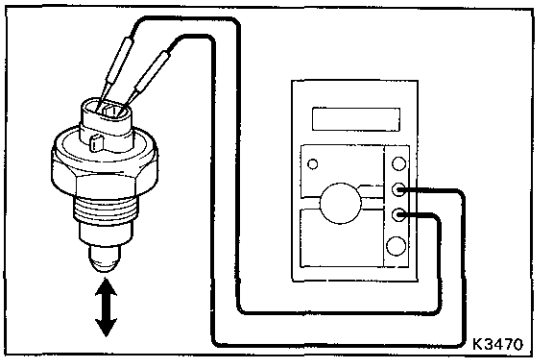

26. INSPECTION OF TRANSFER INDICATOR SWITCHES

Check that there is continuity between terminals as shown.

Switch Position	Specified
Push	Continuity
Free	No continuity

If continuity is not as specified, replace the switch.