COMPONENT PARTS

Input Shaft Assembly

COMPONENTS

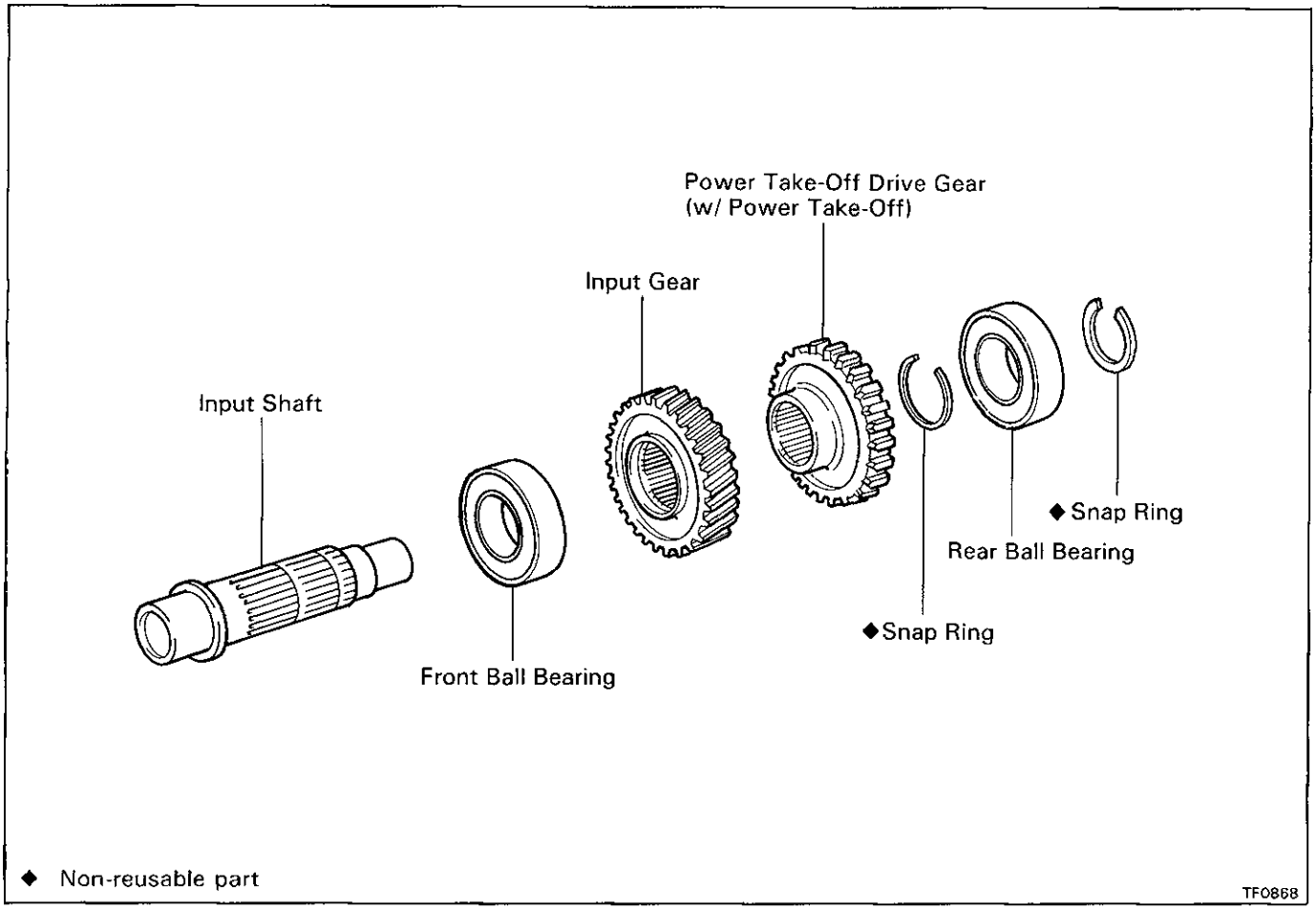

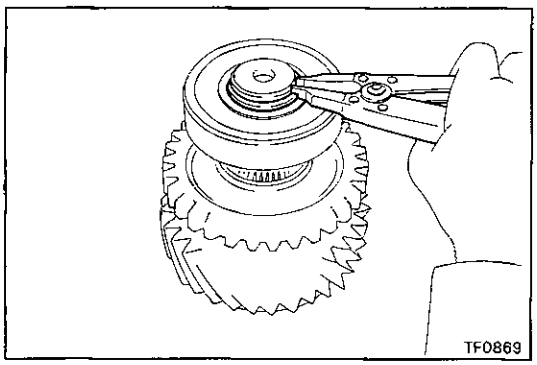

DISASSEMBLY OF INPUT SHAFT ASSEMBLY

1. **REMOVE REAR BALL BEARING**

(a) Using snap ring pliers, remove the snap ring.

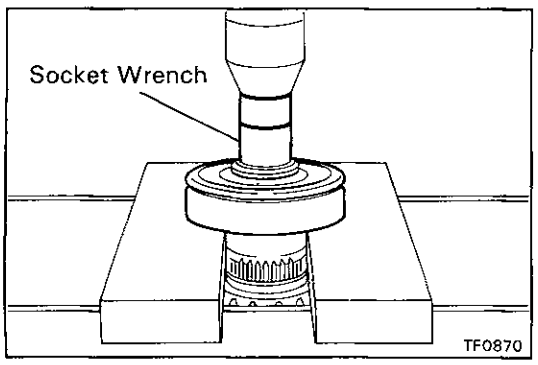

(b) Using a press and socket wrench, remove the rear ball bearing.

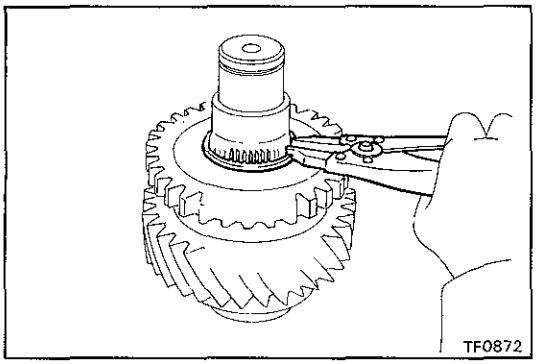

2. (w/ POWER TAKE-OFF)
REMOVE POWER TAKE-OFF DRIVE GEAR

(a) Using snap ring pliers, remove the snap ring.

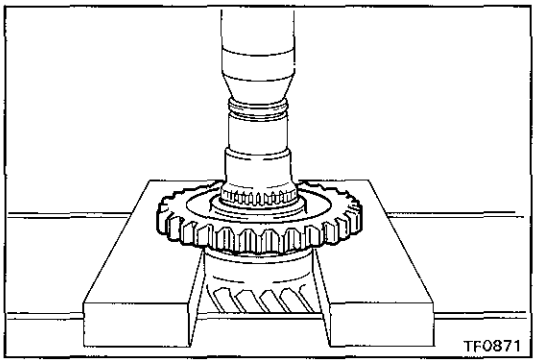

(b) Using a press, remove the power take-off drive gear.

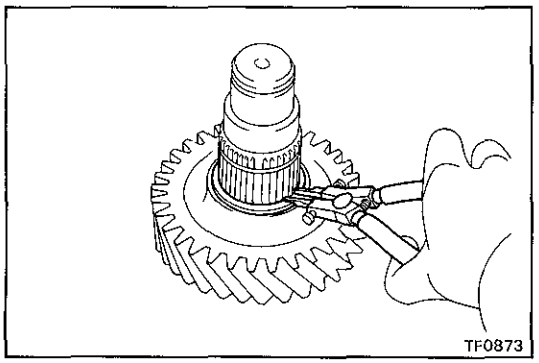

3. REMOVE INPUT GEAR

(a) (w/o Power take-off)
Using snap ring pliers, remove the snap ring.

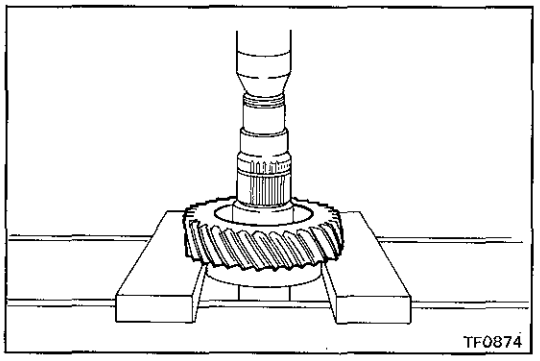

(b) Using a press, remove the input gear.

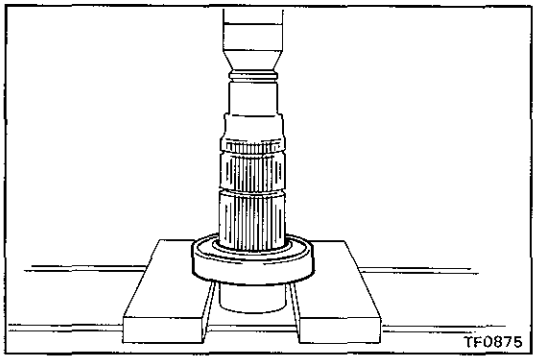

4. REMOVE FRONT BALL BEARING

Using a press, remove the front ball bearing.

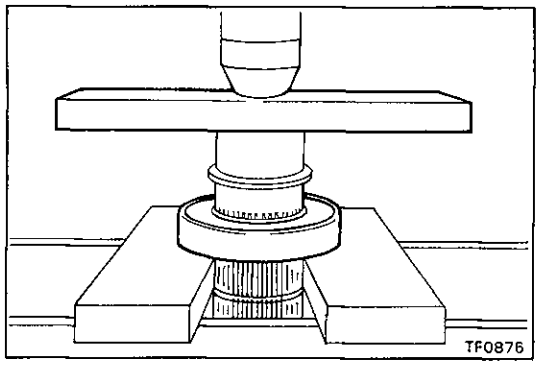

ASSEMBLY OF INPUT SHAFT ASSEMBLY

1. INSTALL FRONT BALL BEARING

Using a press, install the front ball bearing.

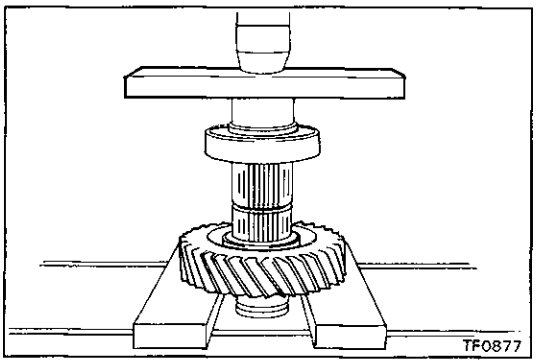

2. INSTALL INPUT GEAR

(a) Using a press, install the input gear.

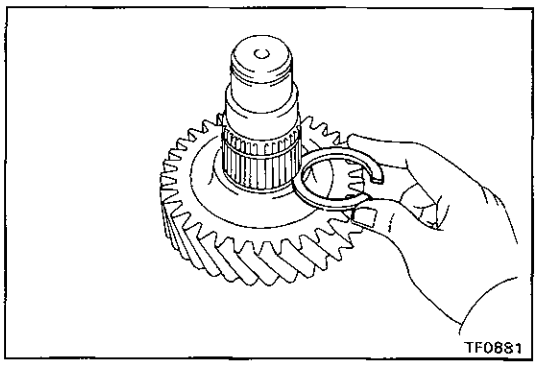

(b) (w/o Power take-off)
Select a snap ring that will allow minimum axial play and install it on the shaft.

Mark	Thickness mm (in.)
A	2.0 (0.0787)
B	2.1 (0.0827)
C	2.2 (0.0866)
D	2.3 (0.0906)
E	2.4 (0.0945)
F	2.5 (0.0984)
G	2.6 (0.1024)
H	2.7 (0.1063)
J	2.8 (0.1102)

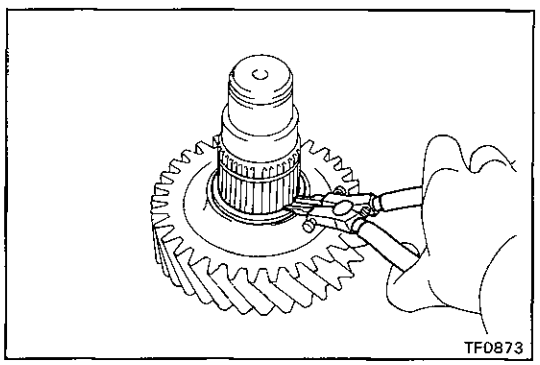

3. (w/ POWER TAKE-OFF) INSTALL POWER TAKE-OFF GEAR

(a) Using a press, install the power take-off gear.

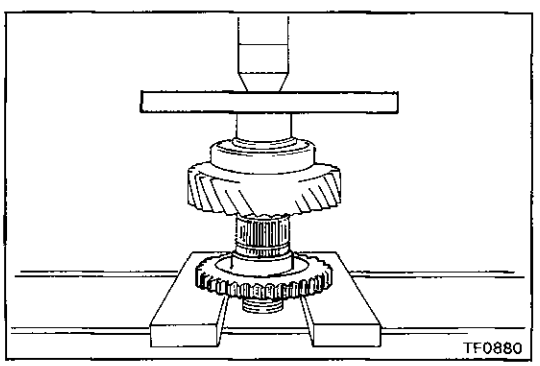

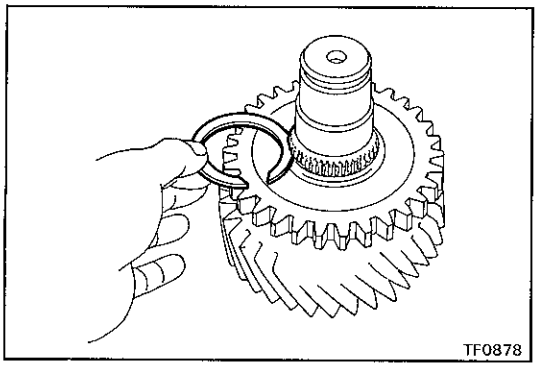

(b) Select a snap ring that will allow minimum axial play and install it on the shaft.

Mark	Thickness mm (in.)
A	2.0 (0.0787)
B	2.1 (0.0827)
C	2.2 (0.0866)
D	2.3 (0.0906)
E	2.4 (0.0945)
F	2.5 (0.0984)
G	2.6 (0.1024)
H	2.7 (0.1063)
J	2.8 (0.1102)

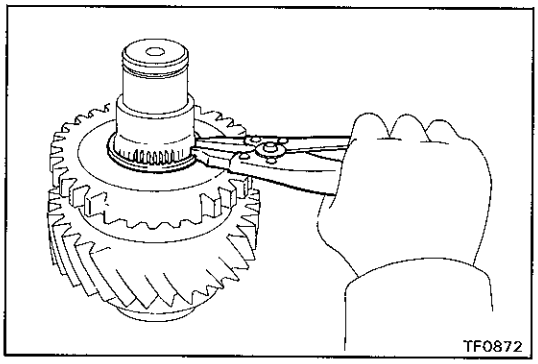

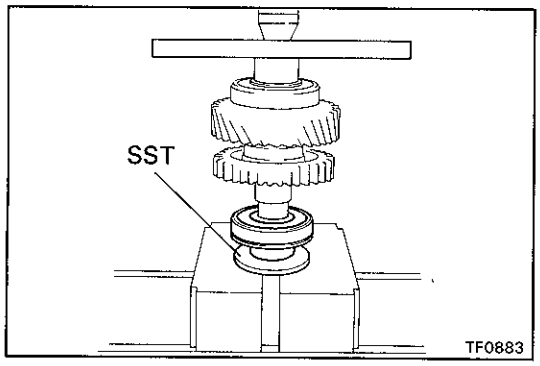

4. INSTALL REAR BALL BEARING

(a) Using SST and a press, install the rear ball bearing.
SST 09316-60010 (09316-00030)

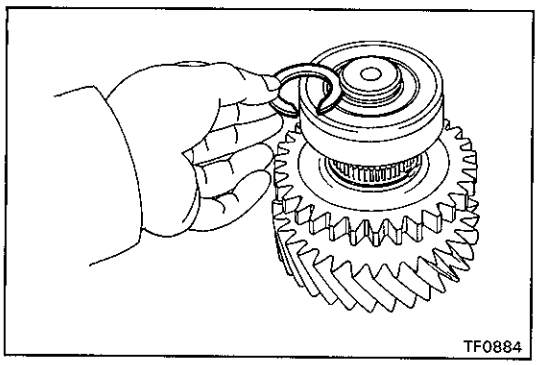

(b) Select a snap ring that will allow minimum axial play.

Mark	Thickness mm (in.)
A	2.0 (0.0787)
B	2.1 (0.0827)
C	2.2 (0.0866)
D	2.3 (0.0906)
E	2.4 (0.0945)

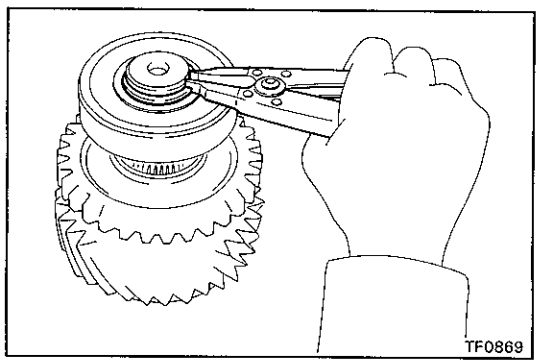

(c) Using snap ring pliers, install the snap ring.