Idler Gear Assembly

COMPONENTS

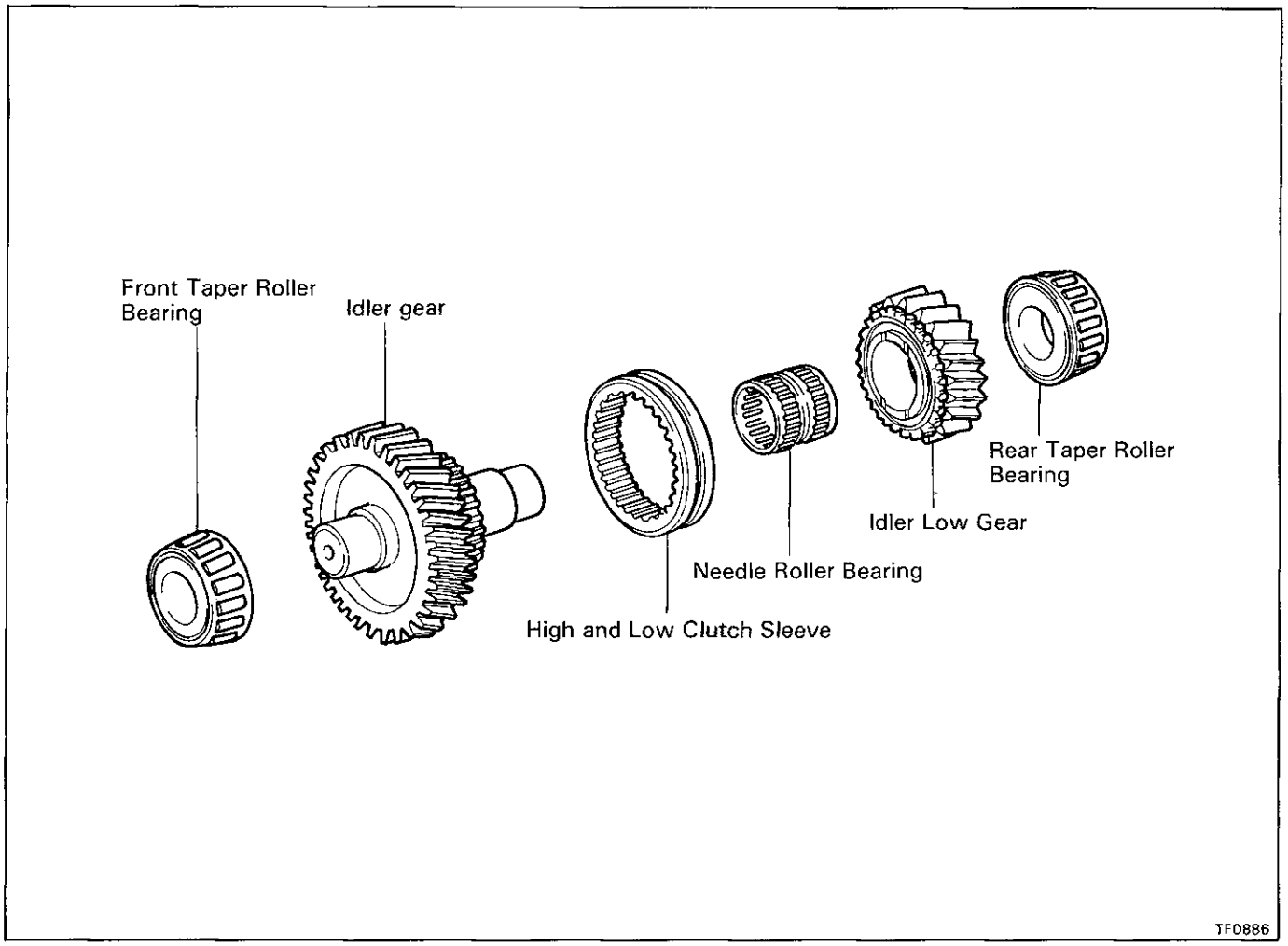

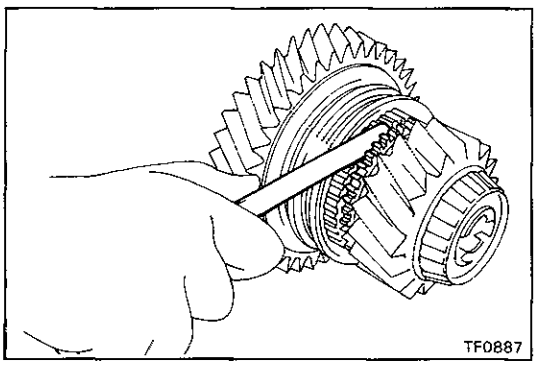

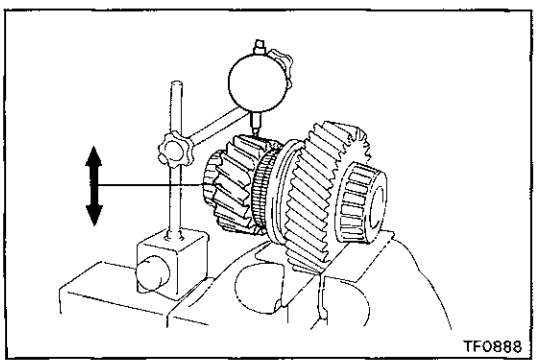

DISASSEMBLY OF IDLER GEAR ASSEMBLY

1. **CHECK OIL CLEARANCE AND THRUST CLEARANCE OF IDLER LOW GEAR**

(a) Using a feeler gauge, measure the idler low gear thrust clearance.

Standard clearance: **0.125 — 0.275 mm (0.0049 — 0.0108 in.)**

Maximum clearance: **0.275 mm (0.0108 in.)**

(b) Using a dial indicator, measure the idler low gear oil clearance.

Standard clearance: **0.015 — 0.068 mm (0.0006 — 0.0027 in.)**

Maximum clearance: **0.068 mm (0.0027 in.)**

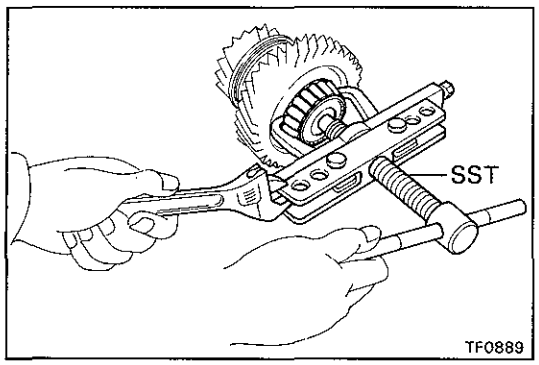

2. REMOVE FRONT TAPER ROLLER BEARING

Using SST, remove the front taper roller bearing.

SST 09950-20017

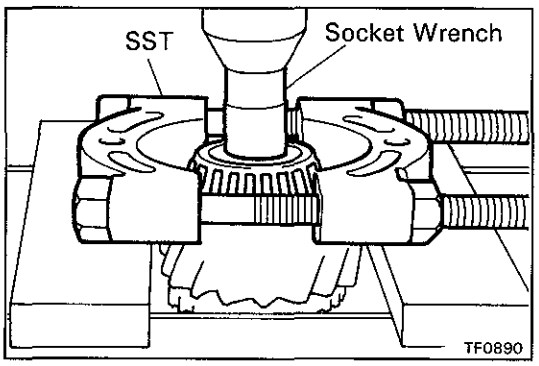

3. REMOVE REAR TAPER ROLLER BEARING

Using SST, press and socket wrench, remove the rear taper roller bearing.

SST 09950-00020

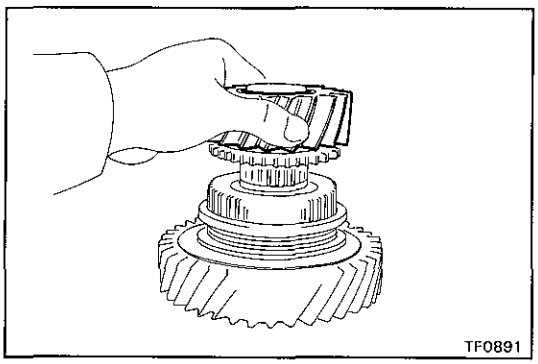

4. REMOVE IDLER LOW GEAR AND NEEDLE ROLLER BEARING

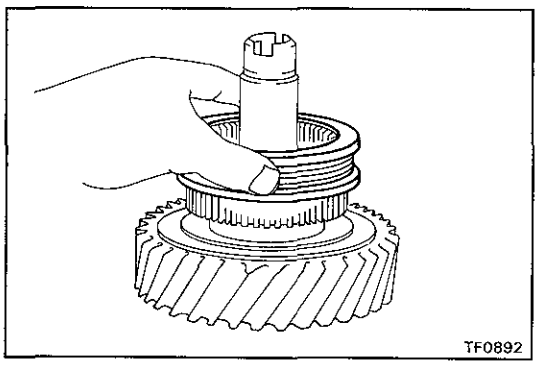

5. REMOVE HIGH AND LOW CLUTCH SLEEVE

ASSEMBLY OF IDLER GEAR ASSEMBLY

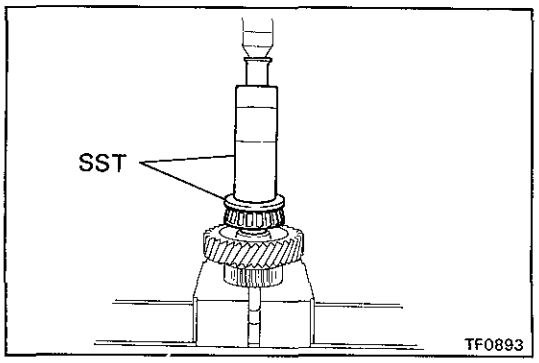

1. INSTALL FRONT TAPER ROLLER BEARING

Using SST and a press, install the front taper roller bearing.

SST 09316-60010 (09316-00010, 09316-00030)

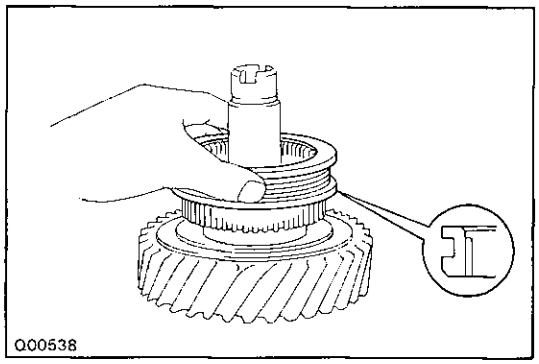

2. INSTALL HIGH AND LOW CLUTCH SLEEVE

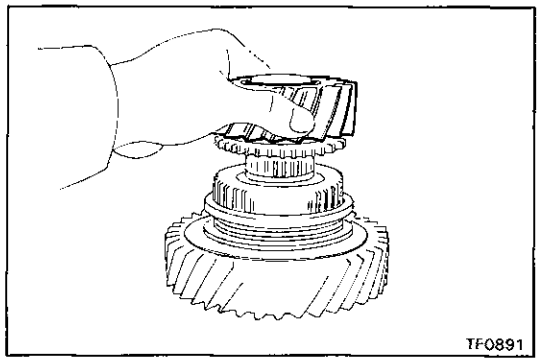

3. INSTALL NEEDLE ROLLER BEARING AND IDLER LOW GEAR

(a) Apply gear oil to the needle roller bearing.

(b) Install the needle roller bearing and idler low gear.

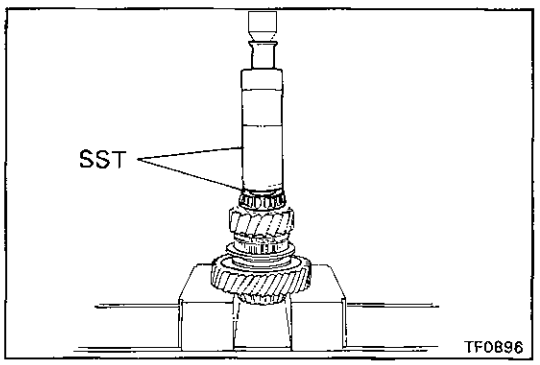

4. INSTALL REAR TAPER ROLLER BEARING

Using SST and a press, install the rear taper roller bearing.

SST 09316-60010 (09316-00010, 09316-00070)

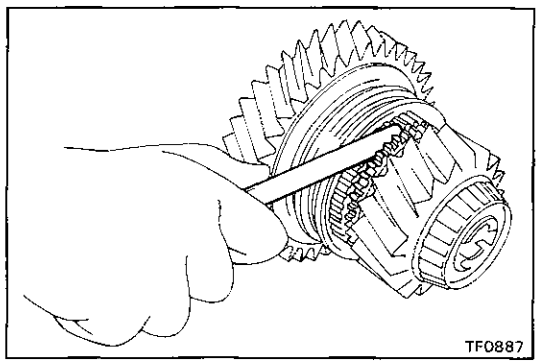

5. MEASURE OIL CLEARANCE AND THRUST CLEARANCE OF IDLE LOW GEAR

(a) Using a feeler gauge, measure the idler low gear thrust clearance.

Standard clearance: 0.125 — 0.275 mm (0.0049 — 0.0108 in.)

Maximum clearance: 0.275 mm (0.0108 in.)

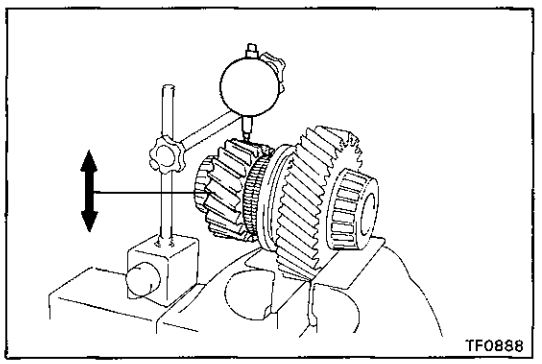

(b) Using a dial indicator, measure the idler low gear oil clearance.

Standard clearance: 0.015 — 0.068 mm (0.0006 — 0.0027 in.)

Maximum clearance: 0.068 mm (0.0027 in.)