Center Differential Assembly

COMPONENTS

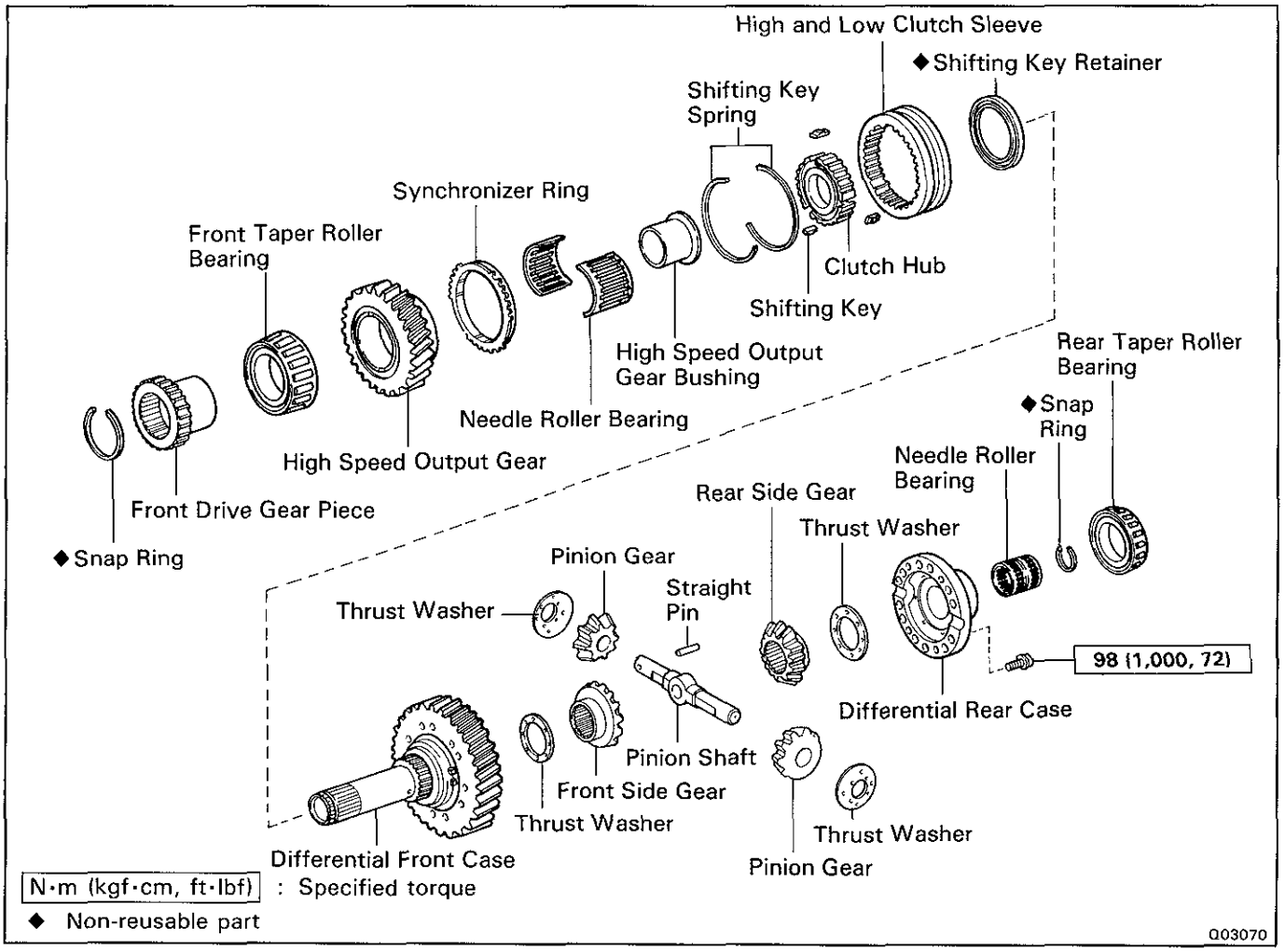

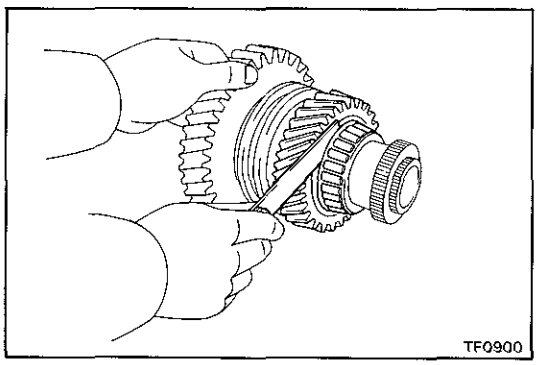

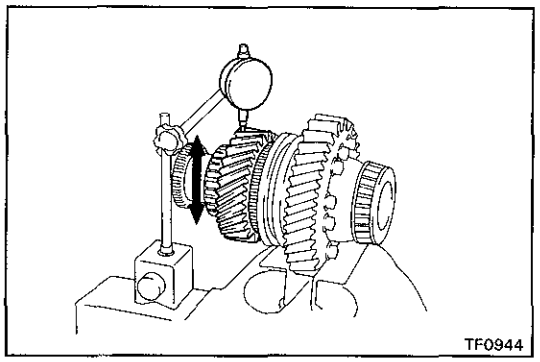

DISASSEMBLY OF CENTER DIFFERENTIAL ASSEMBLY

1. CHECK OIL CLEARANCE AND THRUST CLEARANCE OF HIGH SPEED GEAR

(a) Using a feeler gauge, measure the high speed gear thrust clearance.

Standard clearance: **0.10 — 0.25 mm (0.0039 — 0.0098 in.)**

Maximum clearance: **0.25 mm (0.0098 in.)**

(b) Using a dial indicator, measure the high speed gear oil clearance.

Standard clearance: **0.015 — 0.071 mm (0.0006 — 0.0028 in.)**

Maximum clearance: **0.071 mm (0.0028 in.)**

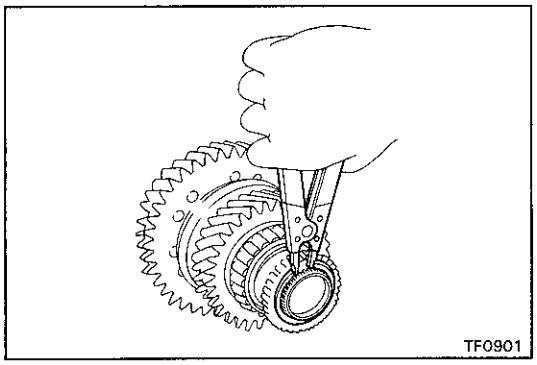

2. REMOVE FRONT DRIVE GEAR PIECE

(a) Using snap ring pliers, remove the snap ring.

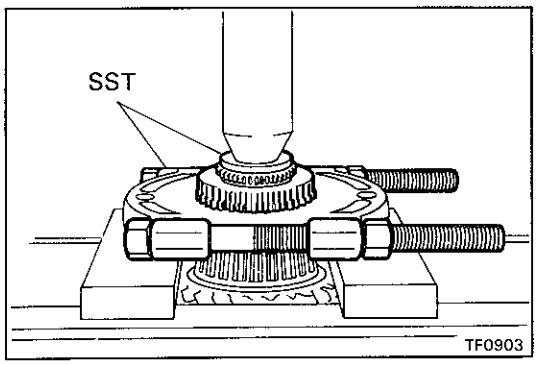

(b) Using SST and a press, remove the front drive gear piece.

SST 09950-20017, 09950-00020

NOTICE: Be careful do not drop the center differential assembly.

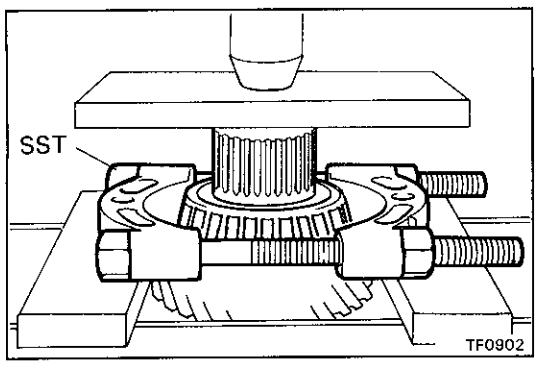

3. REMOVE FRONT TAPER ROLLER BEARING

Using SST and a press, remove the front taper roller bearing.

SST 09950-00020

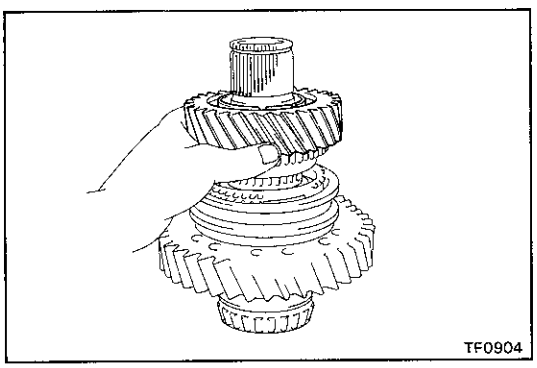

4. REMOVE HIGH SPEED OUTPUT GEAR AND SYNCHRONIZER RING

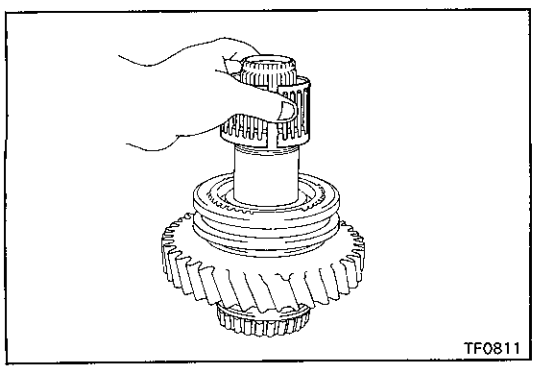

5. REMOVE NEEDLE ROLLER BEARING

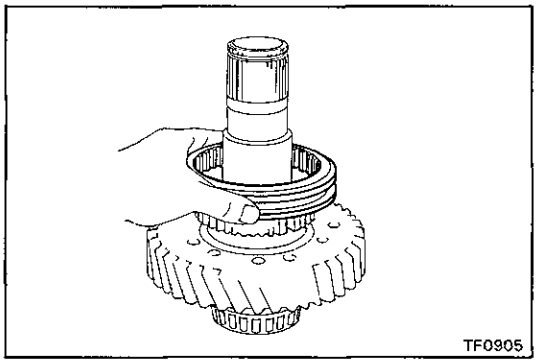

6. REMOVE HIGH AND LOW CLUTCH SLEEVE ASSEMBLY

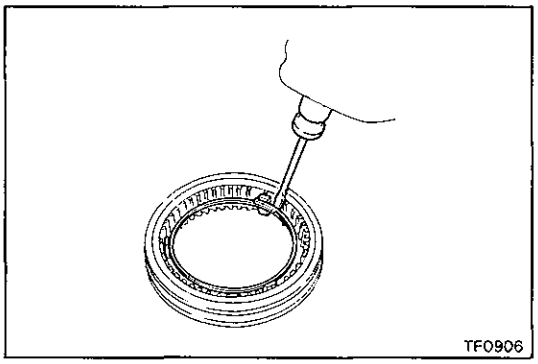

7. REMOVE HIGH AND LOW CLUTCH SLEEVE SHIFTING KEYS AND SPRINGS

Using a screwdriver, remove the two shifting key springs and shifting keys.

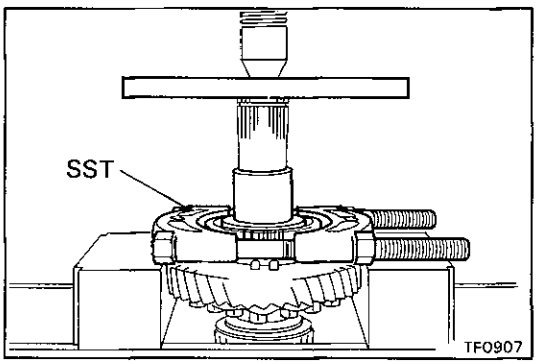

8. REMOVE HIGH SPEED OUTPUT GEAR BUSHING, CLUTCH HUB AND SHIFTING KEY RETAINER

(a) Using SST and a press, remove the high speed output gear bushing, clutch hub and shifting key retainer.

SST 09555-55010

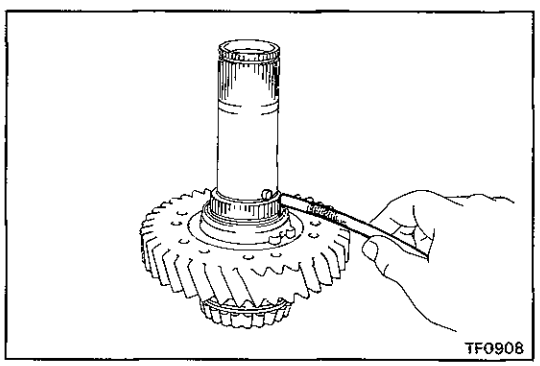

(b) Using a magnetic finger, remove the two straight pins.

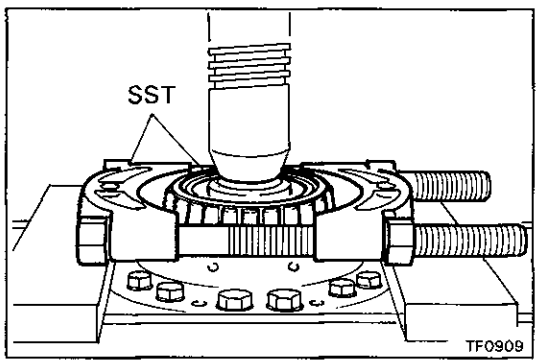

9. REMOVE REAR TAPER ROLLER BEARING

Using SST and a press, remove the rear taper roller bearing.

SST 09950-00020, 09950-20017 (09958-30010)

10. REMOVE SNAP RING AND NEEDLE ROLLER BEARING

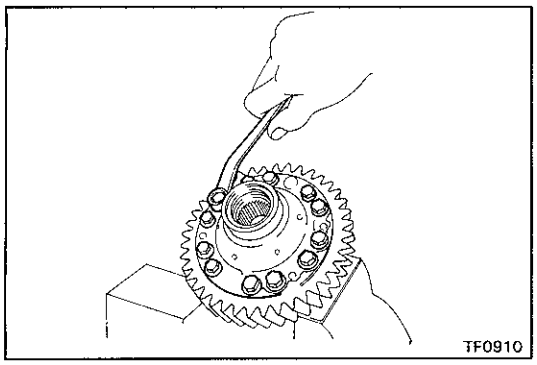

11. REMOVE DIFFERENTIAL REAR CASE

Remove the twelve bolts and differential rear case.

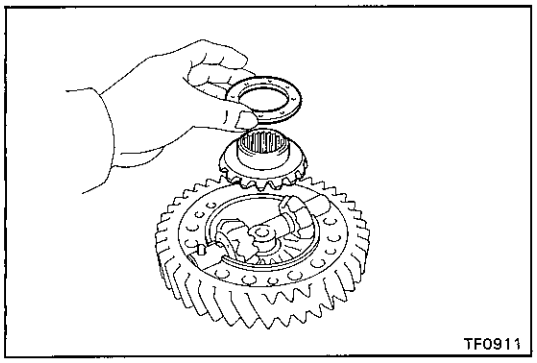

12. REMOVE REAR SIDE GEAR AND THRUST WASHER

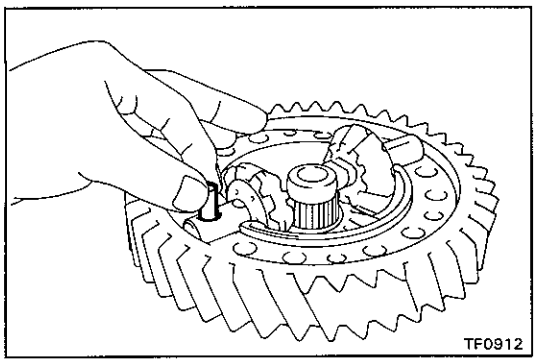

13. REMOVE PINION SHAFT, PINION GEAR AND THRUST WASHER

(a) Remove the straight pin.

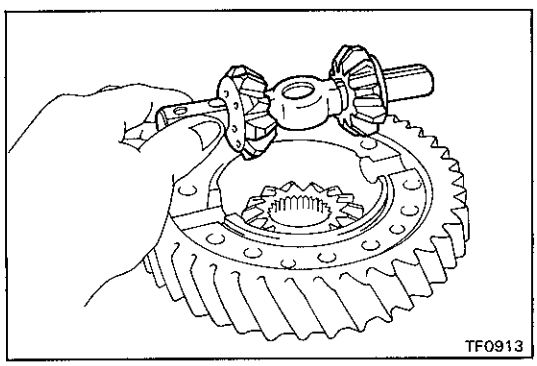

(b) Remove the pinion shaft, pinion gear and thrust washer.

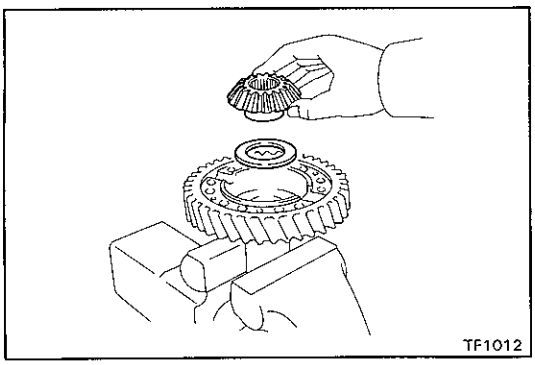

(c) Remove the front side gear and thrust washer.

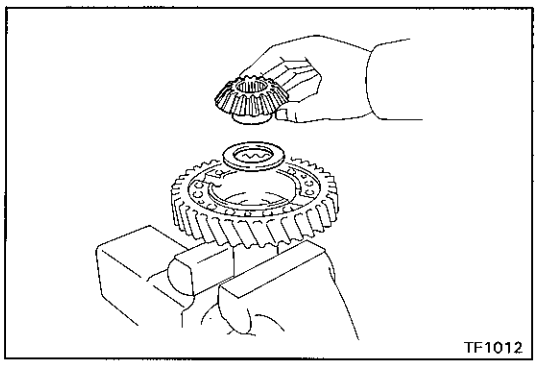
TF1012

ASSEMBLY OF CENTER DIFFERENTIAL ASSEMBLY

1. INSTALL PINION SHAFT, PINION GEAR AND THRUST WASHER

HINT: Coat all of the sliding and rotating surface with gear oil before assembly.

(a) Install the front side gear and thrust washer to the differential front case.

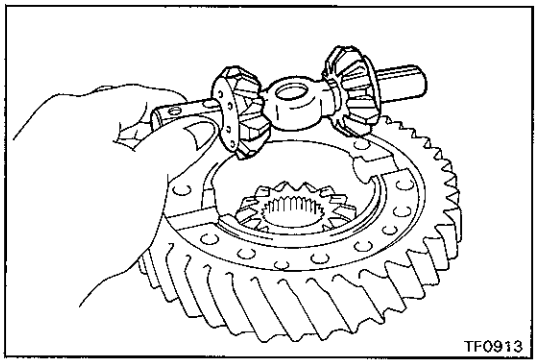
TF0913

(b) Install the two pinion gears and thrust washers to the differential front case.

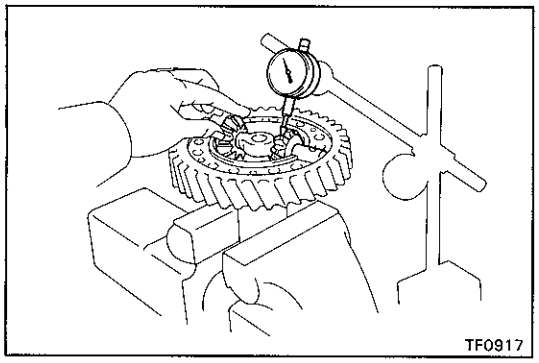
TF0917

(c) Using a dial indicator, measure the front case backlash.

HINT: Push the pinion shaft.

Minimum backlash: 0.05 mm (0.0020 in.)

If the backlash is not within specification, replace the thrust washer with one of the correct size and reinstall the thrust washer.

Thickness mm (in.)
1.70 (0.0669)
1.85 (0.0728)
2.00 (0.0787)
2.15 (0.0846)
2.30 (0.0906)
2.45 (0.0965)
2.60 (0.1024)
2.75 (0.1083)
2.90 (0.1142)
3.05 (0.1201)

(d) Measure the rear case backlash.
(See steps (a) to (c))

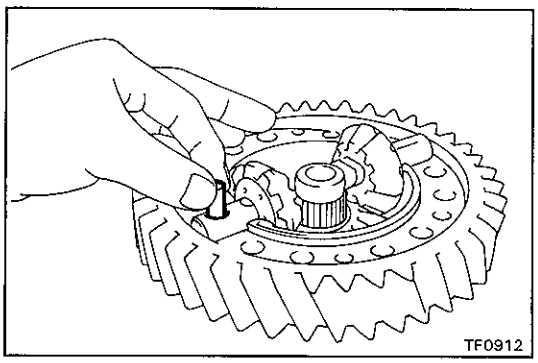
TF0912

2. INSTALL STRAIGHT PIN

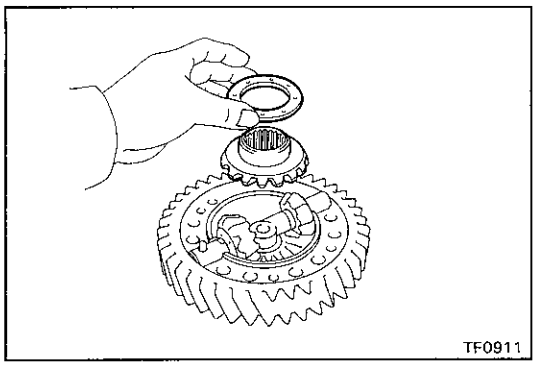

3. INSTALL REAR SIDE GEAR AND THRUST WASHER

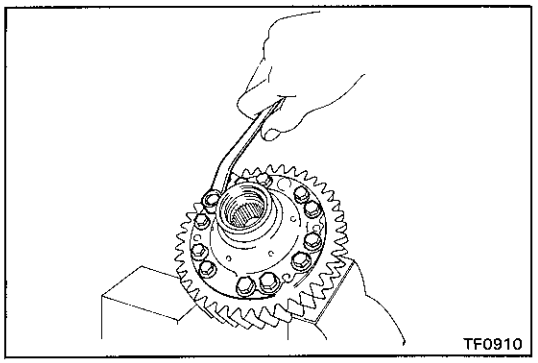

4. INSTALL DIFFERENTIAL REAR CASE

Temporary install the differential rear case and set bolts.

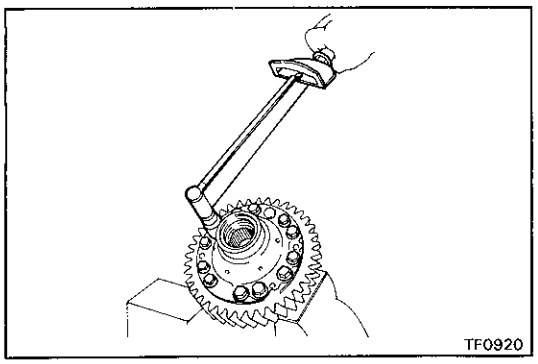

5. TORQUE REAR CASE SET BOLTS

(a) Torque the rear case set bolts.

Torque: 88 N·m (900 kgf·cm, 65 ft·lbf)

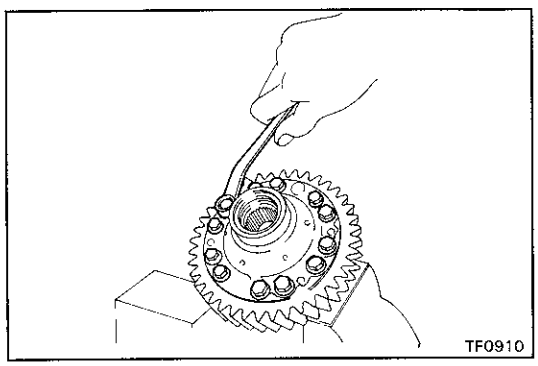

(b) Loosen the rear case set bolts.

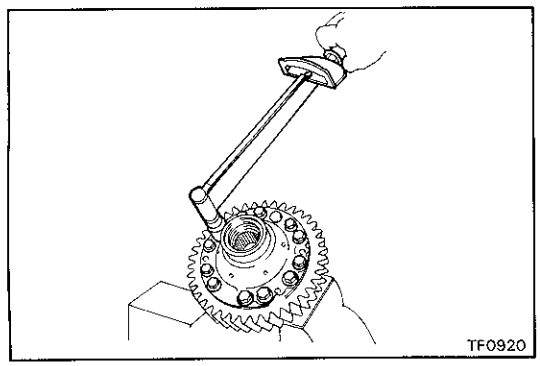

(c) Retorque the rear case set bolts.

Torque: 98 N·m (1000 kgf·cm, 72 ft·lbf)

6. INSTALL NEEDLE ROLLER BEARING AND SNAP RING

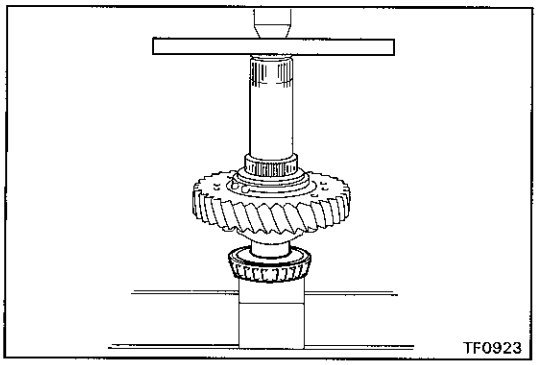

7. INSTALL REAR TAPER ROLLER BEARING

Using a press, install the rear taper roller bearing.

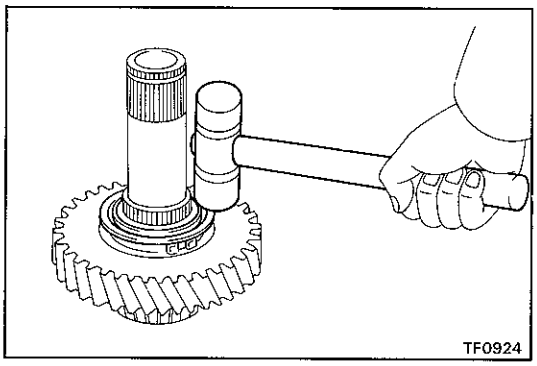

8. INSTALL SHIFTING KEY RETAINER

Using a plastic hammer, tap in the shifting key retainer.

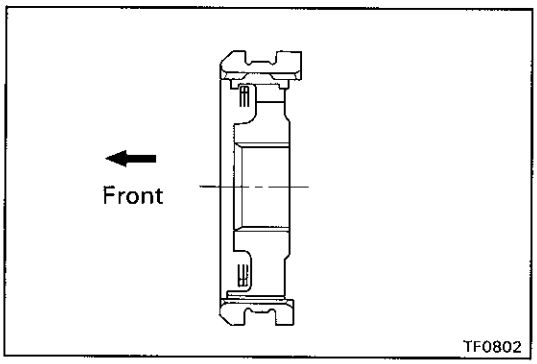

9. INSERT CLUTCH HUB INTO HIGH AND LOW CLUTCH SLEEVE

(a) Install the clutch hub and shifting keys to the high and low clutch sleeve.

(b) Install the shifting key springs.

NOTICE: Install the key springs positioned so that their end gaps are not in line.

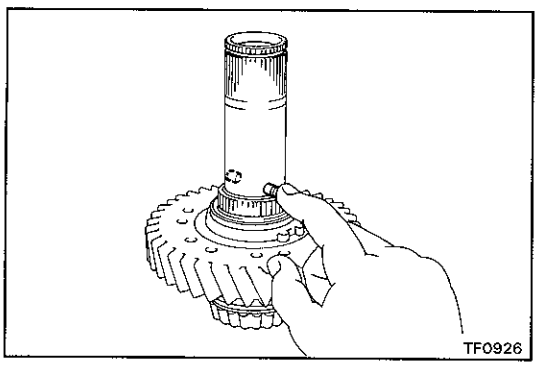

10. INSTALL HIGH AND LOW CLUTCH SLEEVE ASSEMBLY AND HIGH SPEED OUTPUT GEAR BUSHING

(a) Apply MP grease to the straight pin.

(b) Install the two straight pins.

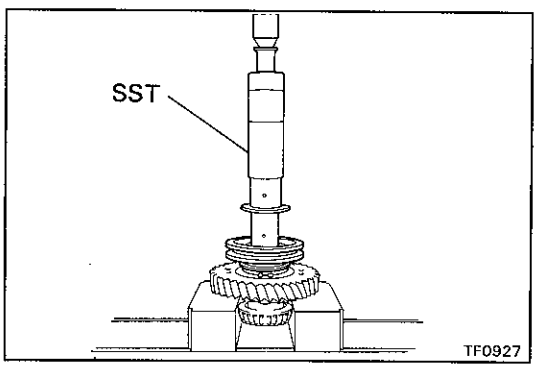

(c) Using SST and a press, install the clutch sleeve assembly and high speed output gear bushing.

SST 09316-60010 (09316-00010)

NOTICE: Before pressing, align the holes on the bushing and shaft so that the pin on the shaft aligned with the cutting portion of the bushing.

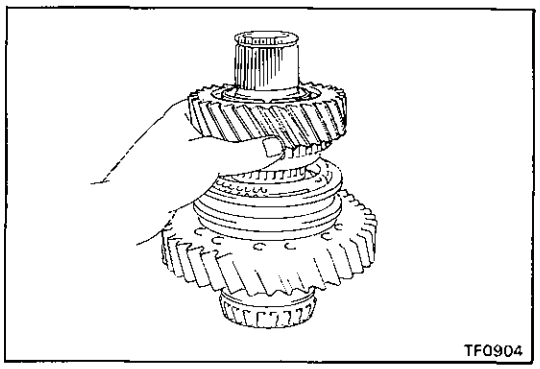

11. INSTALL HIGH SPEED OUTPUT GEAR AND NEEDLE ROLLER BEARING

(a) Apply gear oil to the needle roller bearing.

(b) Place the synchronizer ring on the gear and install the high speed output gear and needle roller bearing.

NOTICE: Align the ring slots with the shifting keys.

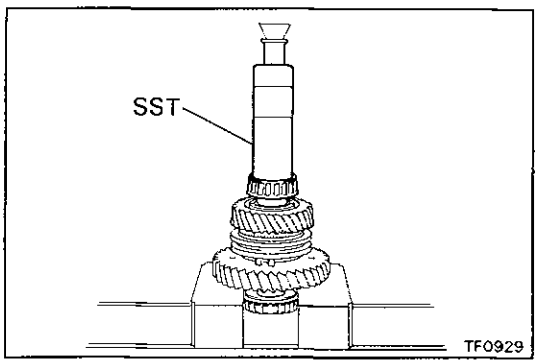

12. INSTALL FRONT TAPER ROLLER BEARING

Using SST and a press, install the front taper roller bearing.

SST 09316-60010 (09316-00010)

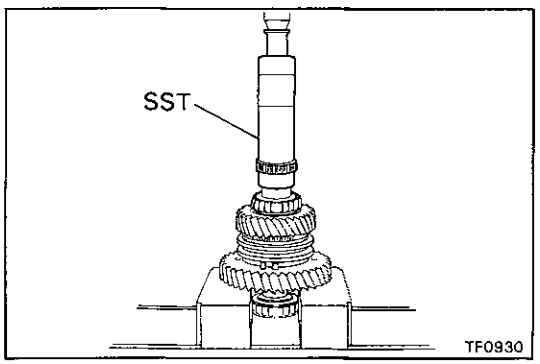

13. INSTALL FRONT DRIVE GEAR PIECE

Using SST and a press, install the front drive gear piece.

SST 09316-60010 (09316-00010)

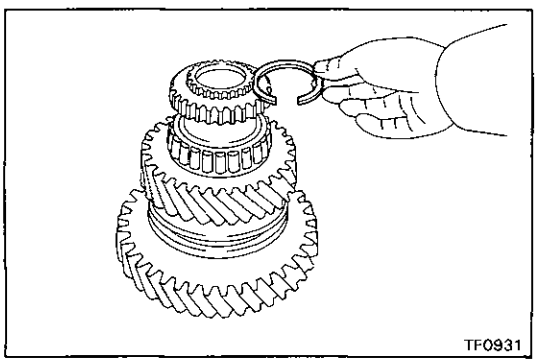

14. INSTALL SNAP RING

Select a snap ring that will allow minimum axial play and install it on the shaft.

Mark	Thickness mm (in.)
A	2.00 (0.0787)
B	2.10 (0.0827)
C	2.20 (0.0866)
D	2.30 (0.0906)
E	2.40 (0.0945)
F	2.50 (0.0984)
G	2.60 (0.1024)
H	2.70 (0.1063)
J	2.80 (0.1102)
K	1.80 (0.0709)
L	1.90 (0.0748)

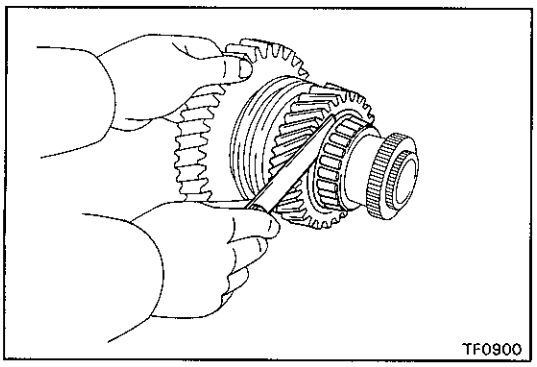

15. MEASURE OIL CLEARANCE AND THRUST CLEARANCE OF HIGH SPEED OUTPUT GEAR

(a) Using a feeler gauge, measure the high speed gear thrust clearance.

Standard clearance: **0.10 — 0.25 mm (0.0039 — 0.0098 in.)**

Maximum clearance: **0.25 mm (0.0098 in.)**

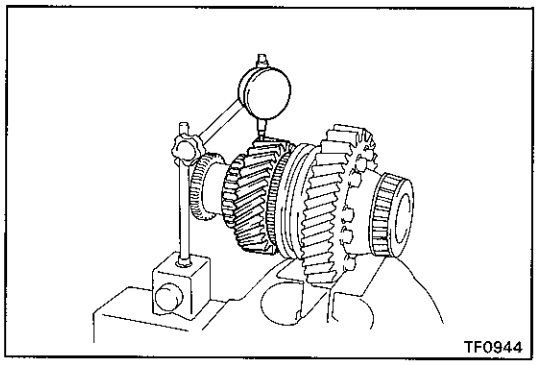

(b) Using a dial indicator, measure the high speed gear oil clearance.

Standard clearance: **0.015 — 0.071 mm (0.0006 — 0.0028 in.)**

Maximum clearance: **0.071 mm (0.0028 in.)**