Front Extension Housing Assembly

COMPONENTS

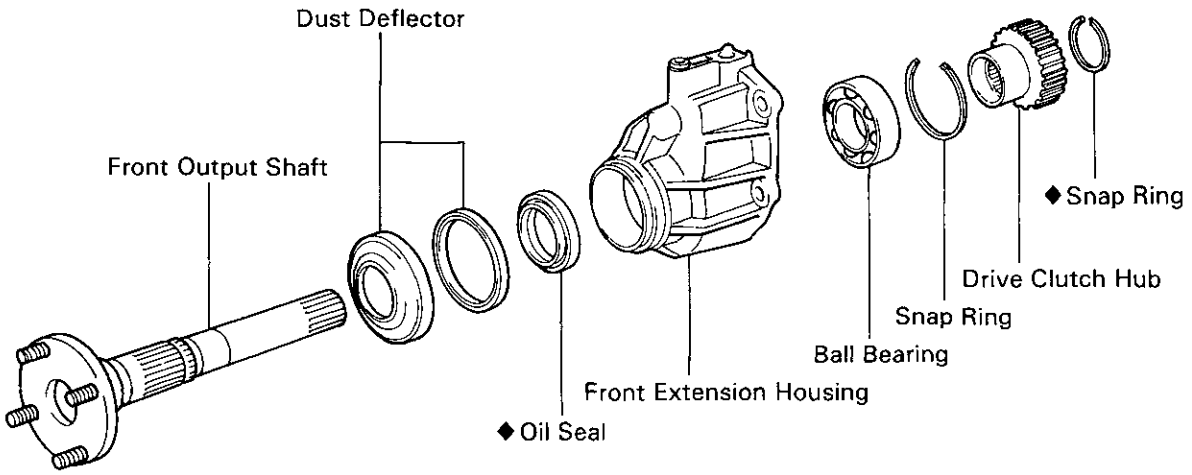

◆ Non-reusable part

TF0932

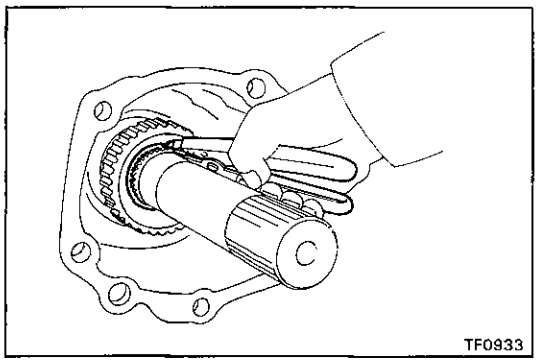

TF0933

DISASSEMBLY OF FRONT EXTENSION HOUSING ASSEMBLY

1. **REMOVE DRIVE CLUTCH HUB**

(a) Using snap ring pliers, remove the snap ring.

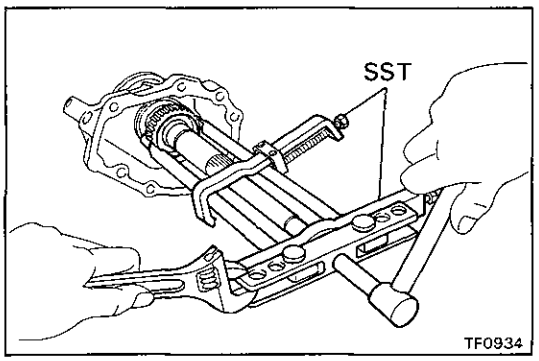

TF0934

(b) Using SST, remove the drive clutch hub.
SST 09950-20017

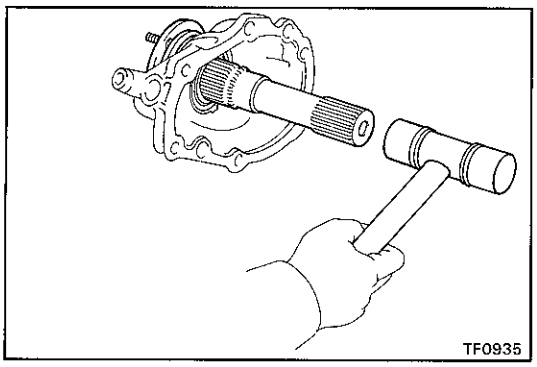

2. REMOVE FRONT OUTPUT SHAFT

Using a plastic hammer, drive out the front output shaft.

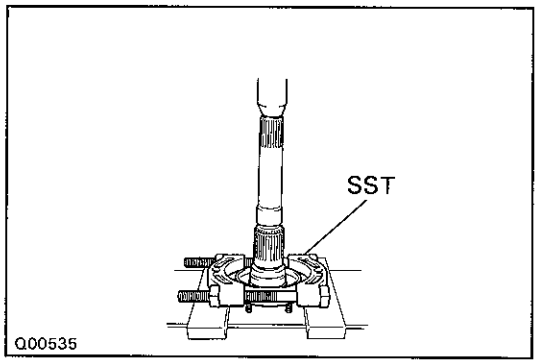

3. REMOVE DUST DEFLECTORS

(a) Using SST and a press, remove the dust deflector.

SST 09950-00020

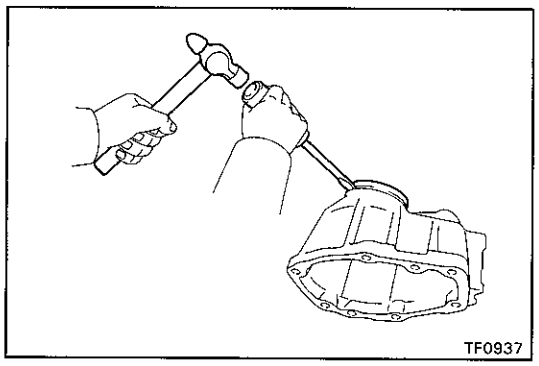

(b) Using a screwdriver and hammer, tap the dust deflector and remove it.

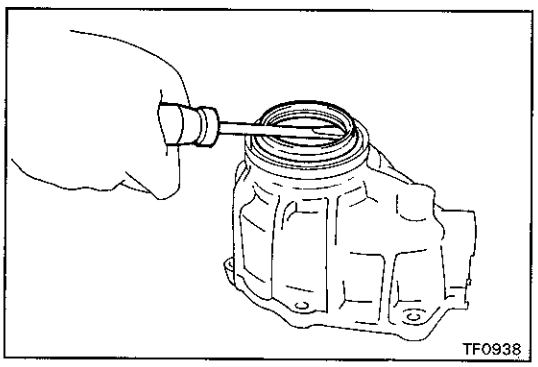

4. REMOVE OIL SEAL

Using a screwdriver, pry out the oil seal.

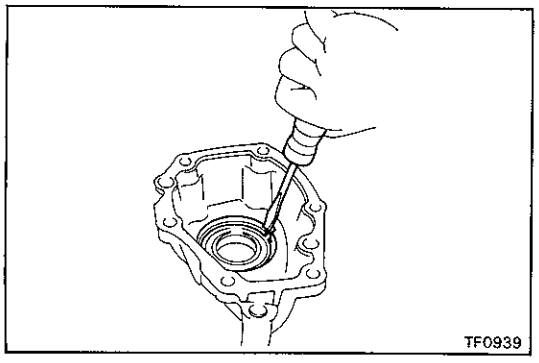

5. REMOVE BALL BEARING

(a) Using a screwdriver, remove the snap ring.

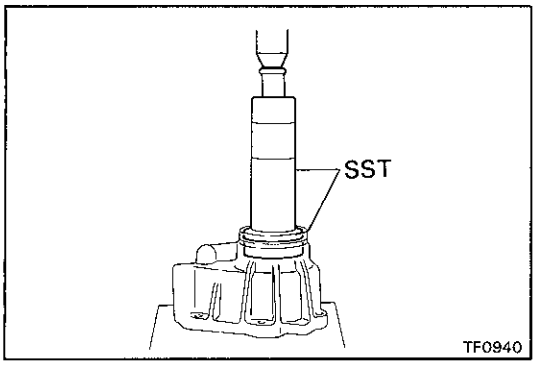

(b) Using SST and a press, remove the ball bearing.
SST 09316-60010 (09316-00010, 09316-00070)

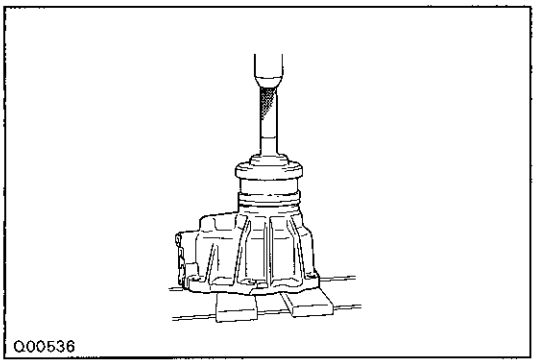

ASSEMBLY OF FRONT EXTENSION HOUSING ASSEMBLY

1. INSTALL DUST DEFLECTORS

(a) Using SST and a press, install the dust deflector.
SST 09223-41020, 09223-15020

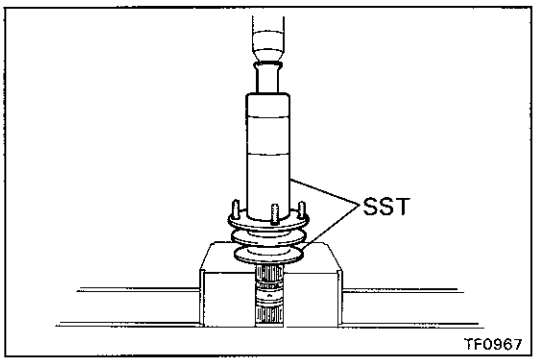

(b) Using SST and a press, install the dust deflector.
SST 09316-60010 (09316-00010),
09316-20011

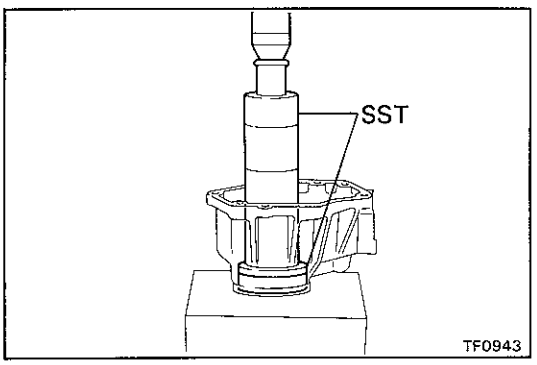

2. INSTALL BALL BEARING

(a) Using SST and a press, install the ball bearing.
SST 09316-60010 (09316-00010, 09316-00030)

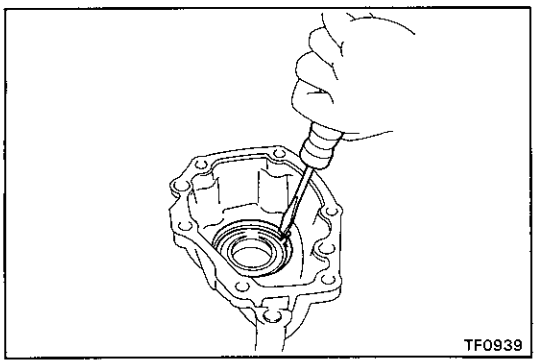

(b) Using a screwdriver, install the snap ring.

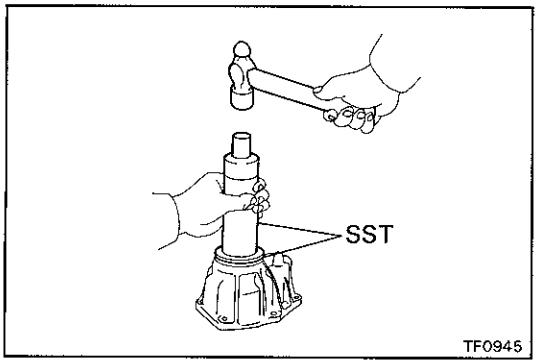

3. INSTALL OIL SEAL

Using SST and a hammer, drive in a new oil seal.

SST 09316-60010 (09316-00010, 09316-00060)

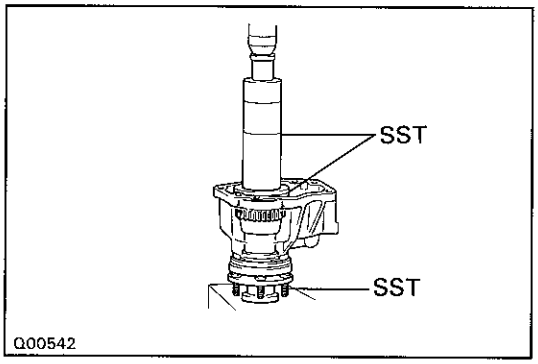

4. INSTALL FRONT OUTPUT SHAFT AND DRIVE CLUTCH HUB

(a) Using SST and press, install the front output shaft and drive clutch hub.

SST 09316-20011, 09316-60010 (09316-00010, 09316-00040, 09316-00070)

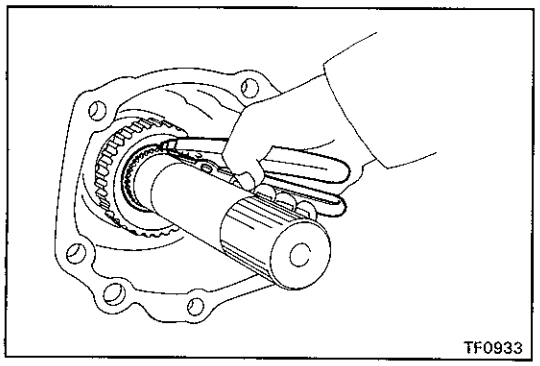

(b) Using snap ring pliers, install the new snap ring.