Rear Extension Housing Assembly

COMPONENTS

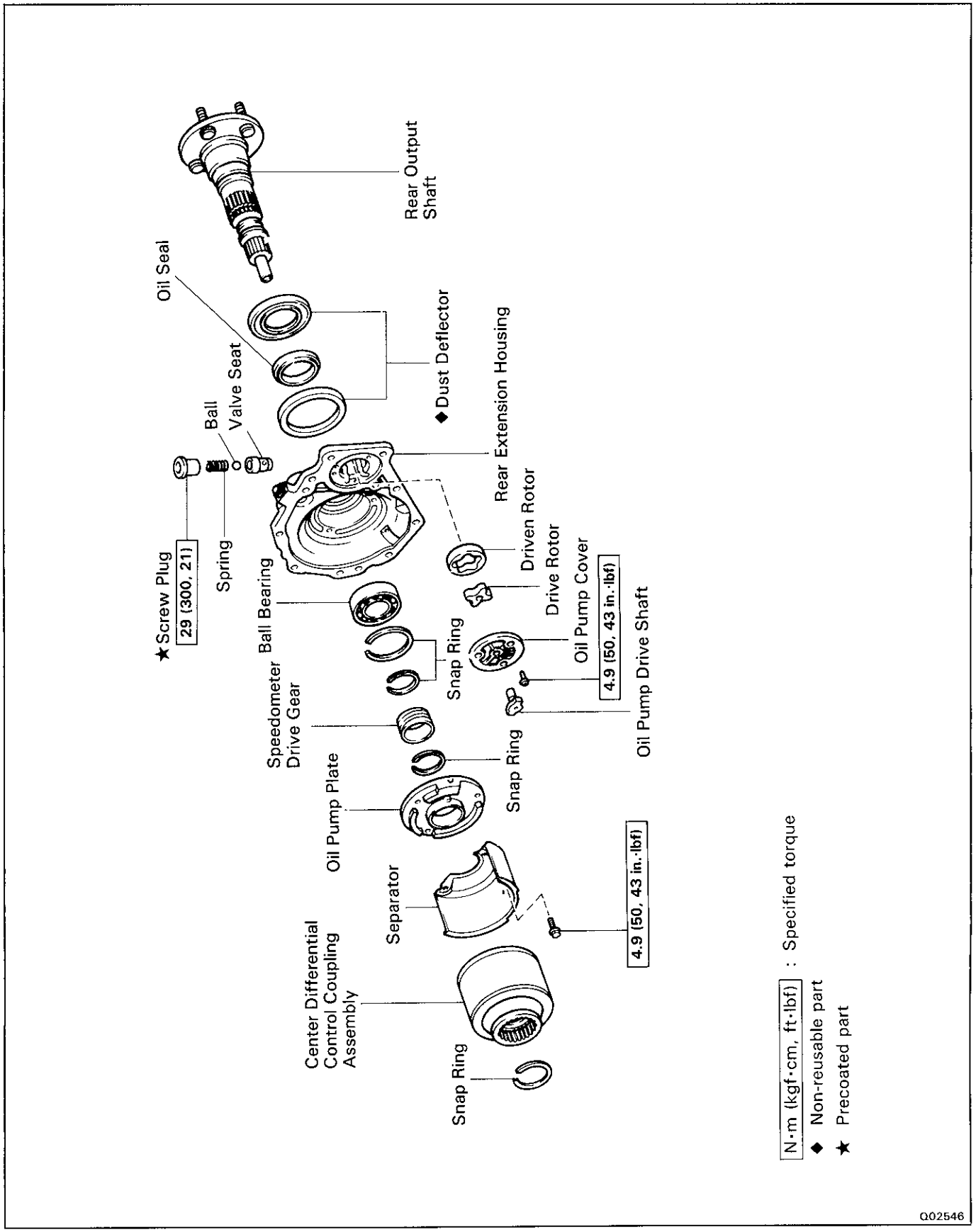

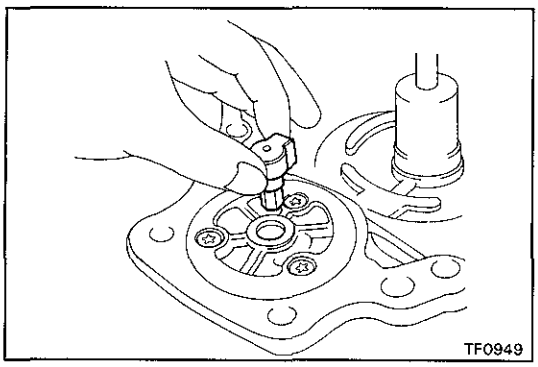

DISASSEMBLY OF REAR EXTENSION HOUSING ASSEMBLY

1. REMOVE OIL PUMP DRIVE SHAFT

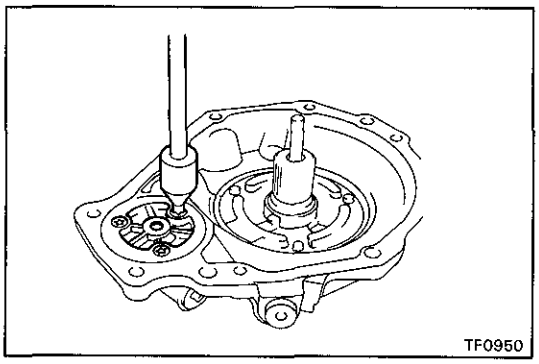

2. REMOVE OIL PUMP COVER

(a) Using a torx socket wrench, remove the three screws. (Torx socket wrench T30 09042-00010)

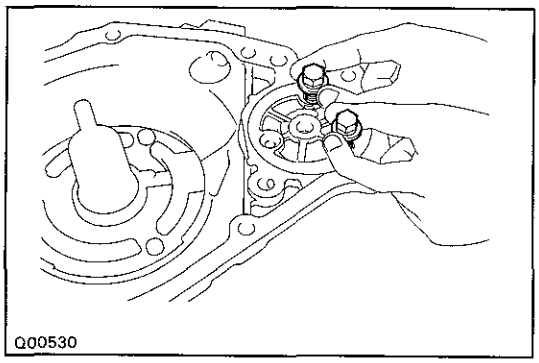

(b) Install two suitable bolts to the pump cover.

(c) Remove the pump cover from rear extension housing.

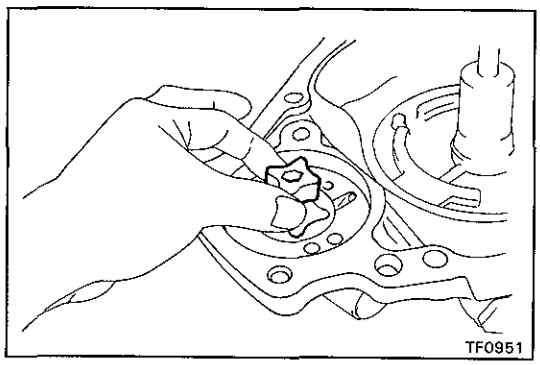

3. REMOVE DRIVE ROTOR

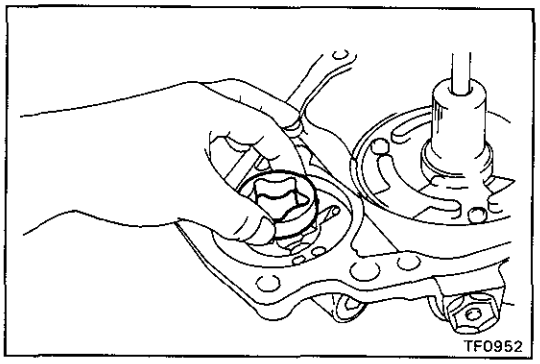

4. REMOVE DRIVEN ROTOR

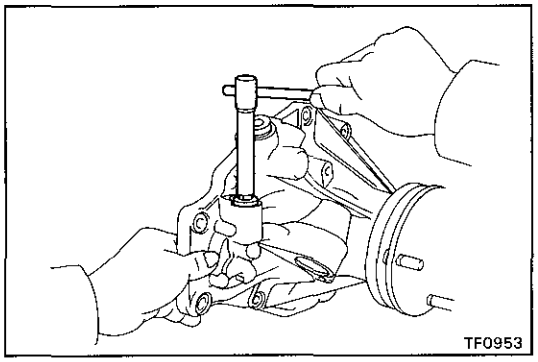

5. REMOVE SCREW PLUG, SPRING, BALL AND VALVE SEAT

(a) Using a hexagon wrench, remove the screw plug.

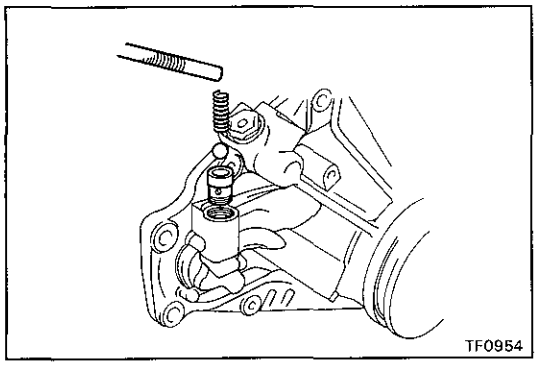

(b) Using a magnetic finger, remove the spring, ball and valve seat.

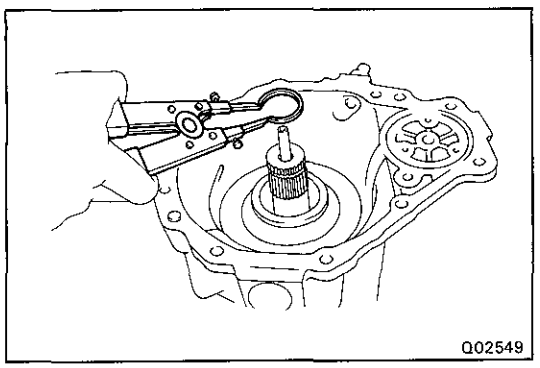

6. REMOVE CENTER DIFFERENTIAL CONTROL COUPLING ASSEMBLY

(a) Using snap ring pliers, remove the snap ring.

(b) Remove the coupling assembly.

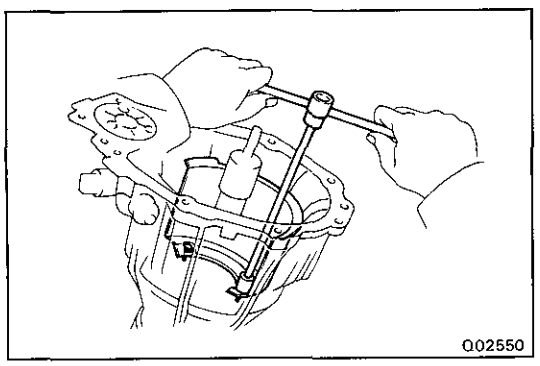

7. REMOVE SEPARATOR

Remove the two bolts and the separator.

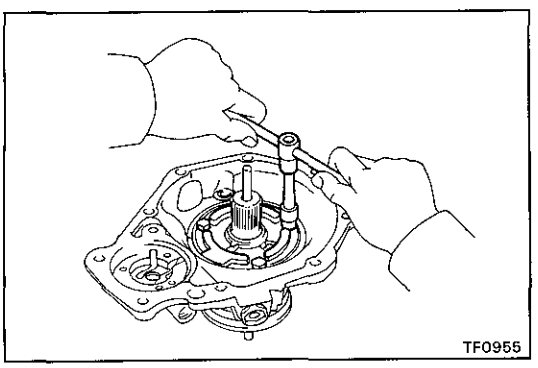

8. REMOVE OIL PUMP PLATE

Remove the bolt and the oil pump plate.

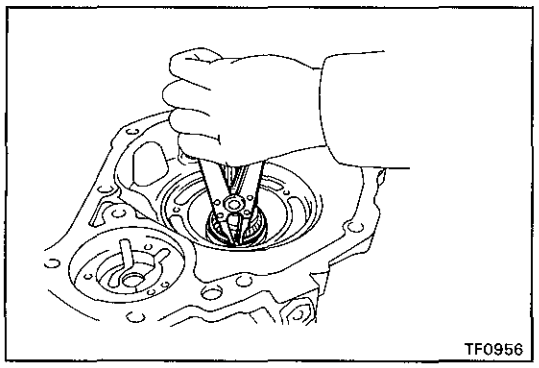

9. REMOVE SPEED METER DRIVE GEAR

(a) Using snap ring pliers, remove the snap ring.

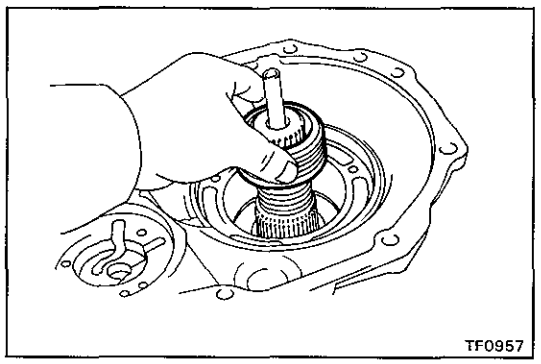

(b) Remove the speedometer drive gear.

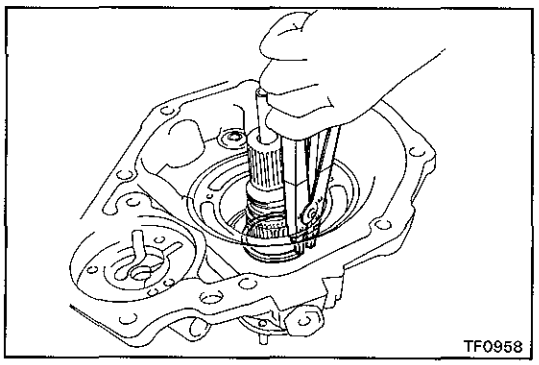

10. REMOVE REAR OUTPUT SHAFT

(a) Using snap ring pliers, remove the snap ring.

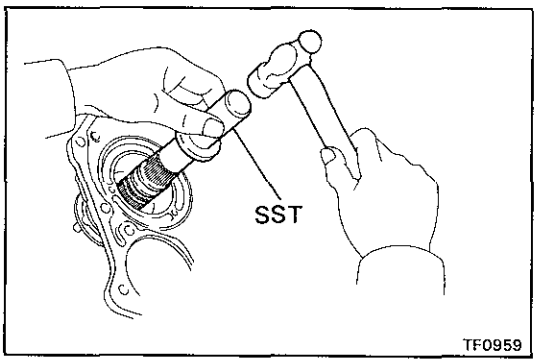

(b) Using SST and a hammer, remove the rear output shaft.
SST 09325-12010

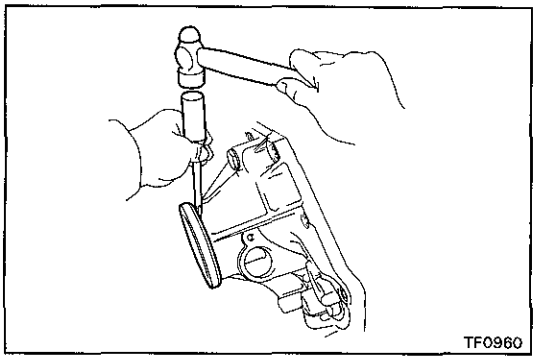

11. REMOVE DUST DEFLECTORS

(a) Using a screwdriver and hammer, remove the rear extension housing dust deflectors.

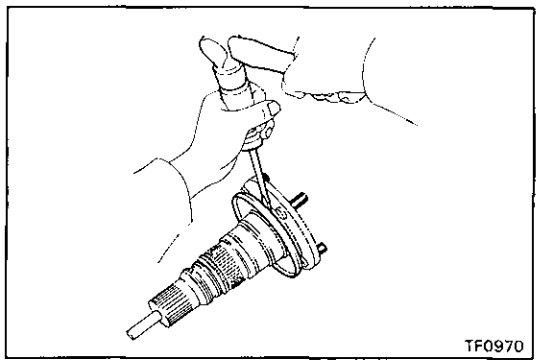

(b) Using a screwdriver and hammer, remove the rear output shaft dust deflector.

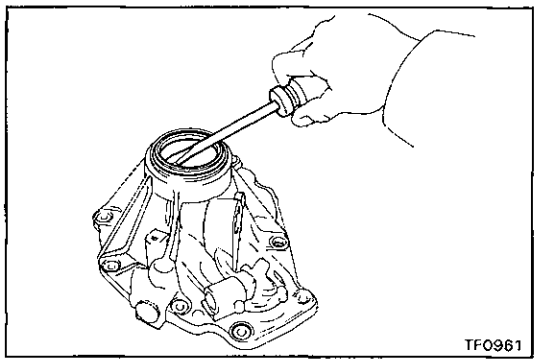

12. REMOVE OIL SEAL

Using a screwdriver, pry out the oil seal.

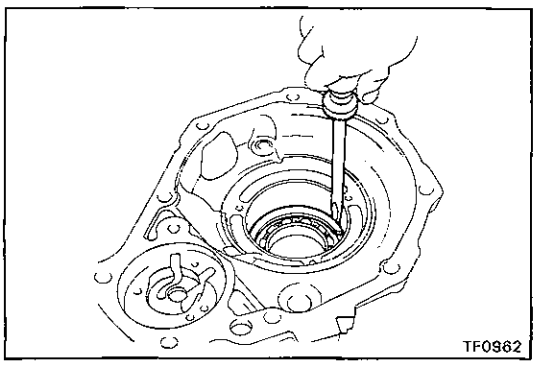

13. REMOVE BALL BEARING

(a) Using a screwdriver, remove the snap ring.

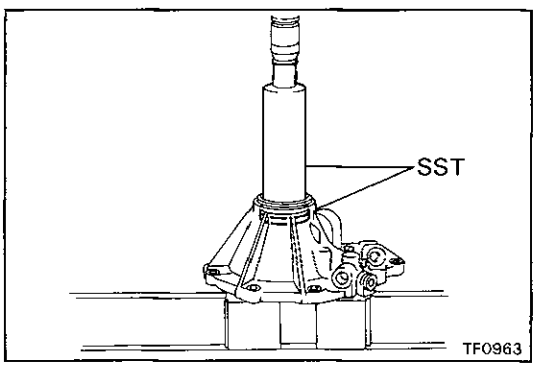

(b) Using SST and a press, remove the ball bearing.
SST 09316-60010 (09316-00010, 09316-00020)

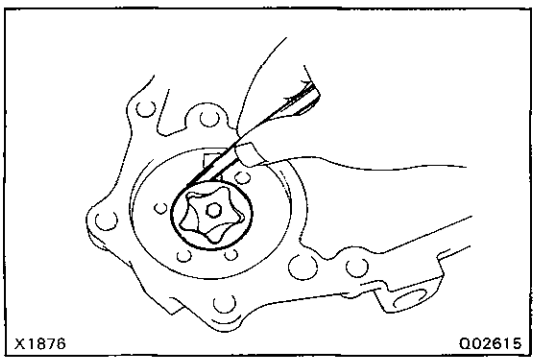

INSPECTION OF OIL PUMP

1. CHECK BODY CLEARANCE OF DRIVEN ROTOR

Install the drive rotor to the driven rotor.
Using a feeler gauge, measure body clearance between drive rotor and extension housing.

Standard body clearance: **0.08 — 0.17 mm (0.0031 — 0.0067 in.)**

Maximum body clearance: **0.17 mm (0.0067 in.)**

If the body clearance is greater than the maximum, replace the drive rotor or driven rotor.

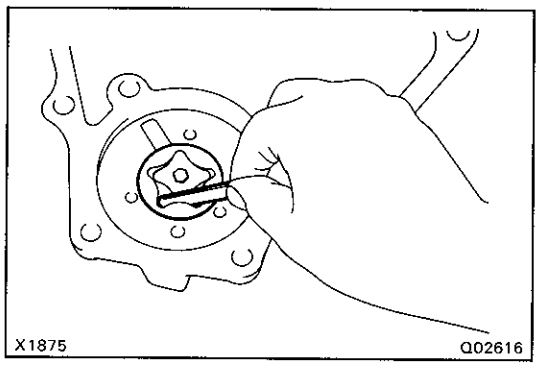

2. CHECK TIP CLEARANCE OF DRIVEN ROTOR

Using a feeler gauge, measure tip clearance between drive rotor and driven rotor.

Standard tip clearance: 0.05 – 0.15 mm (0.0020 – 0.0059 in.)

Maximum tip clearance: 0.15 mm (0.0059 in.)

If the tip clearance is greater than the maximum, replace the drive rotor or driven rotor.

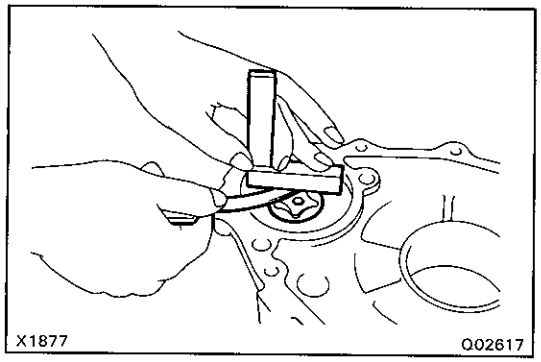

3. CHECK SIDE CLEARANCE OF OIL PUMP

Using a steel straight edge and a feeler gauge, measure the side clearance of oil pump.

Standard side clearance: 0.03 – 0.10 mm (0.0012 – 0.0039 in.)

Maximum side clearance: 0.10 mm (0.0039 in.)

If the side clearance greater than the maximum, replace the drive rotor or driven rotor.

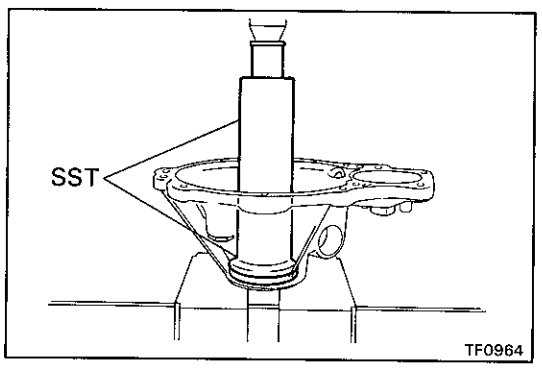

ASSEMBLY OF REAR EXTENSION HOUSING ASSEMBLY

1. INSTALL BALL BEARING

(a) Using SST and a press, install the ball bearing.

SST 09316-60010 (09316-00010, 09316-00030)

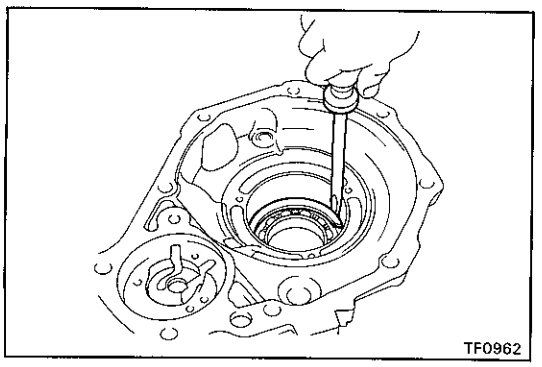

(b) Using a screwdriver, install the snap ring.

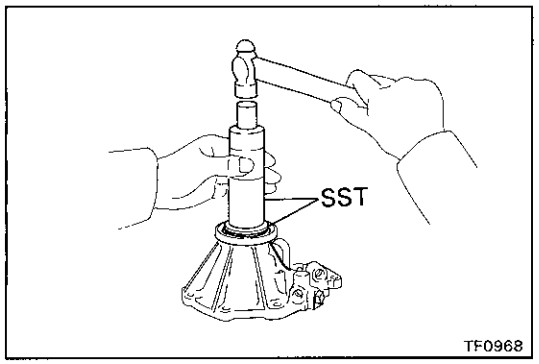

2. INSTALL DUST DEFLECTORS

(a) Using SST and a hammer, install a new rear extension housing dust deflector.

SST 09316-60010 (09316-00010, 09316-00040)

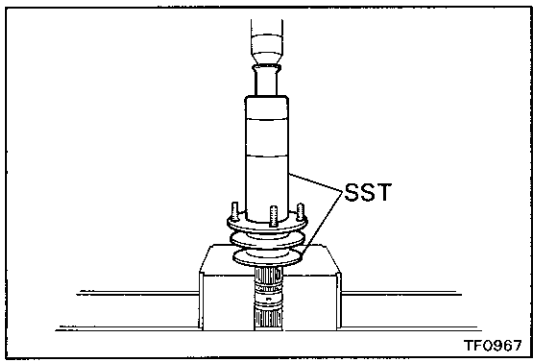

(b) Using SST and a press, install a new rear extension housing dust deflector.

SST 09316-20011, 09316-60010,
(09316-00010)

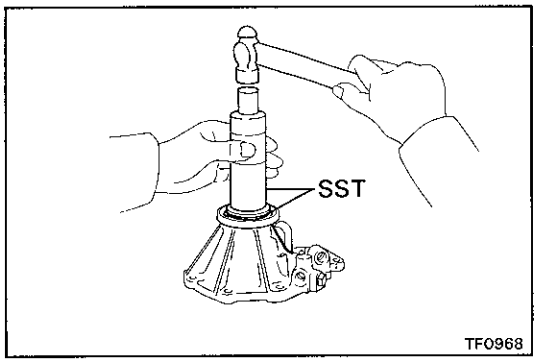

3. INSTALL OIL SEAL

Using SST and a hammer, drive in a new oil seal.

SST 09316-60010 (09316-00010, 09316-00030)

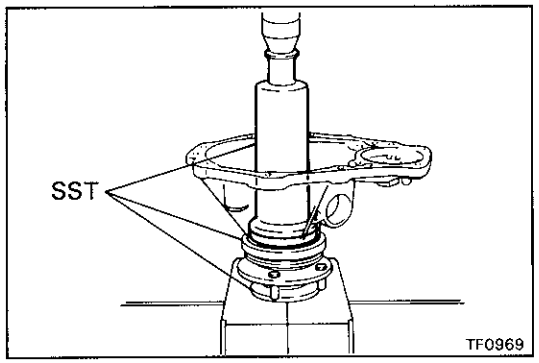

4. INSTALL REAR OUTPUT SHAFT

(a) Using SST and a press, install the rear output shaft.

SST 09316-60010 (09316-00010, 09316-00030)
09316-20011

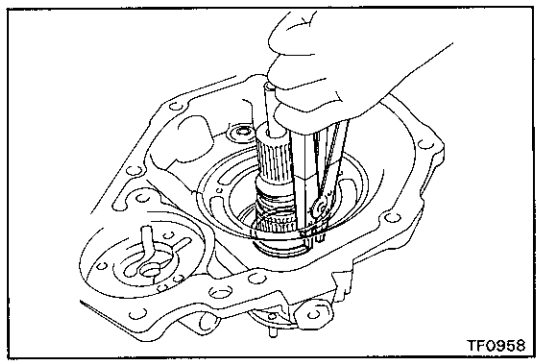

(b) Using snap ring pliers, install the snap ring.

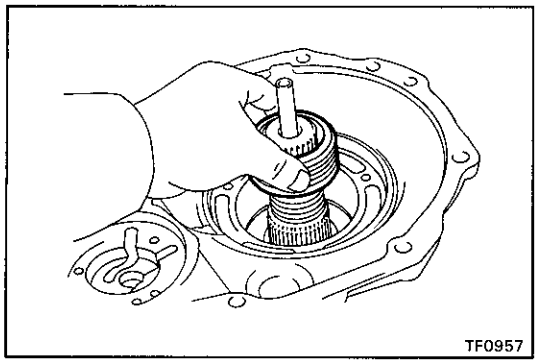

5. INSTALL SPEEDOMETER DRIVE GEAR

(a) Install the speedometer drive gear.

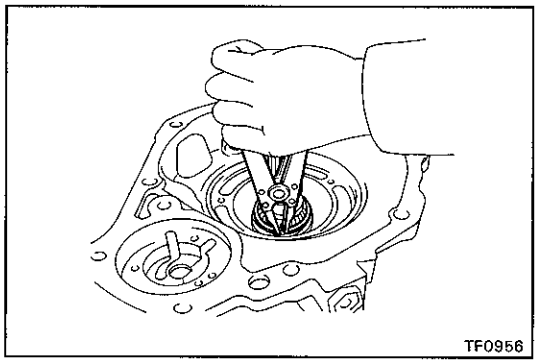

(b) Using snap ring pliers, install the snap ring.

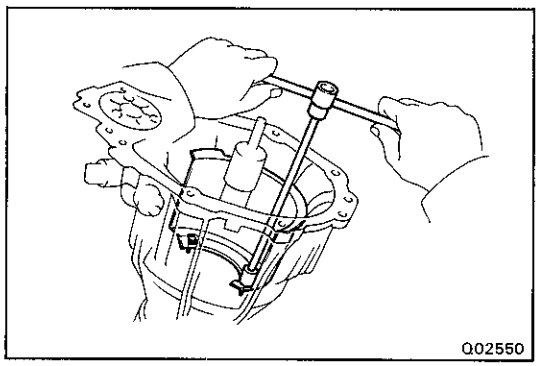

6. INSTALL OIL PUMP PLATE SEPARATOR

(a) Install the oil pump plate.

(b) Install the separator.

(c) Install and torque the three bolts.

Torque: 4.9 N·m (50 kgf·cm, 43 in.·lbf)

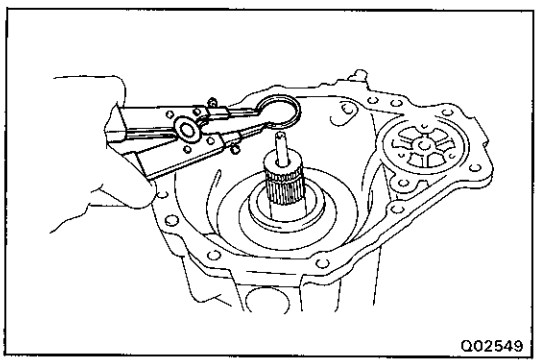

7. INSTALL CENTER DIFFERENTIAL CONTROL COUPLING ASSEMBLY

(a) Install the coupling assembly.

(b) Using snap ring pliers, install the snap ring.

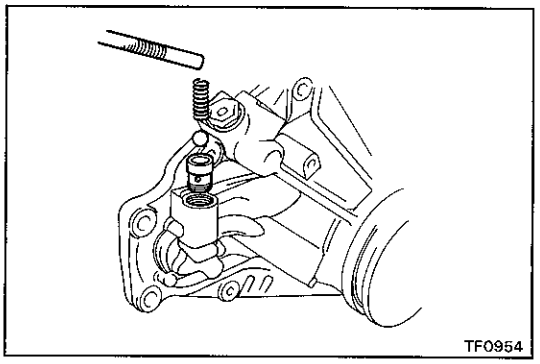

8. INSTALL VALVE SEAT, BALL, SPRING AND SCREW PLUG

(a) Apply gear oil to the ball.

(b) Install the valve seat, ball and spring.

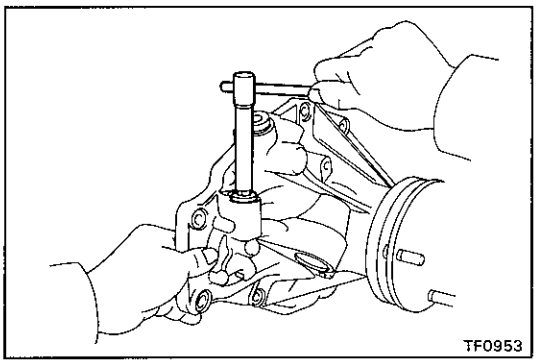

(c) Apply liquid sealer to the screw plug.

Sealant: Part No. 08833-00080, THREE BOND 1344, LOCTITE 242 or equivalent

(d) Using a hexagon wrench, install and torque the screw plug.

Torque: 29 N·m (300 kgf·cm, 21 ft·lbf)

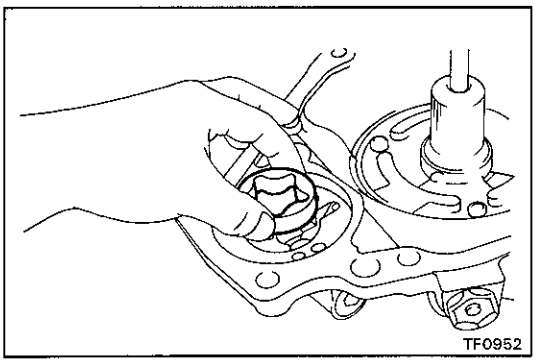

9. INSTALL DRIVEN ROTOR

(a) Apply gear oil to the driven rotor.

(b) Install the driven rotor.

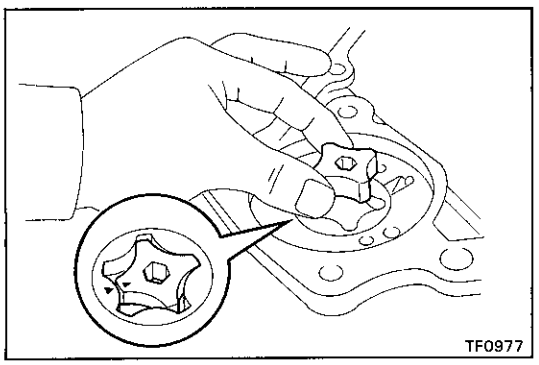

10. INSTALL DRIVE ROTOR

(a) Apply gear oil to the drive rotor.

(b) Install the drive rotor.

HINT: Align the alignment marks.

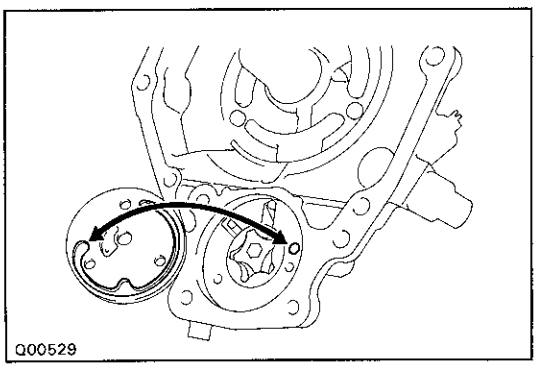

11. INSTALL OIL PUMP COVER

(a) Install the oil pump cover.

(b) Using a torx socket wrench, install and torque the three screws.

(Torx socket wrench T30 09042-00010)

Torque: 4.9 N·m (50 kgf·cm, 43 in.·lbf)

NOTICE: Align the oil hole of the rear extension housing and oil groove end of the oil pump cover.