TRANSFER ASSEMBLY

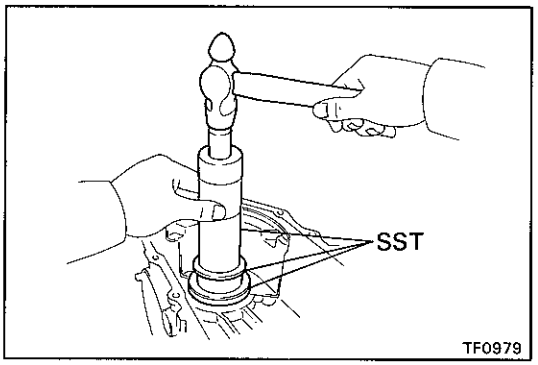

1. INSTALL TWO BEARING RACES TO FRONT CASE

(a) Using SST and a hammer, install the center differential bearing race.

SST 09316-60010 (09316-00010, 09316-00030)
09316-20011

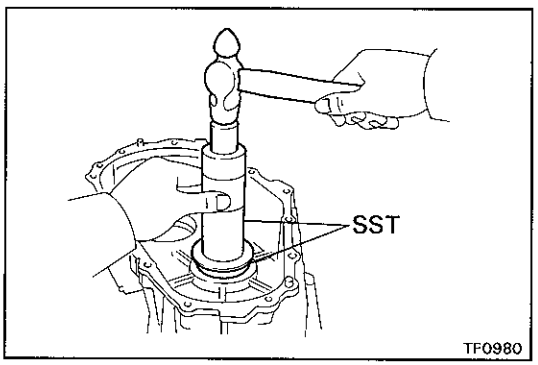

(b) Using SST and a hammer, install the idle gear bearing race.

SST 09316-60010 (09316-00010, 09316-00040)

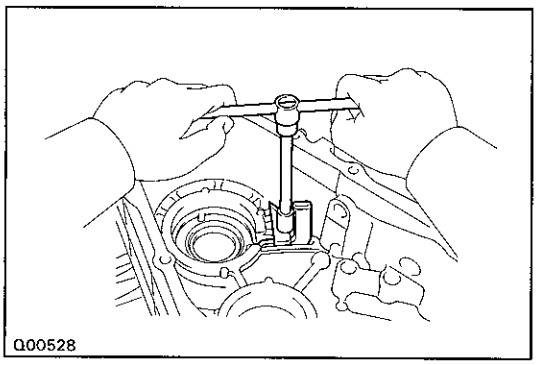

2. INSTALL OIL RECEIVER TO FRONT CASE

(a) Install the oil receiver.

(b) Install and torque the bolt.

Torque: 11.7 N·m (120 kgf·cm, 8.6 ft·lbf)

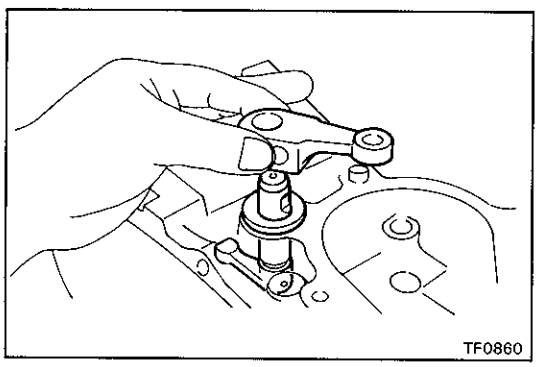

3. INSTALL SHIFT OUTER LEVER AND INNER LEVER

(a) Install the shift outer lever and inner lever.

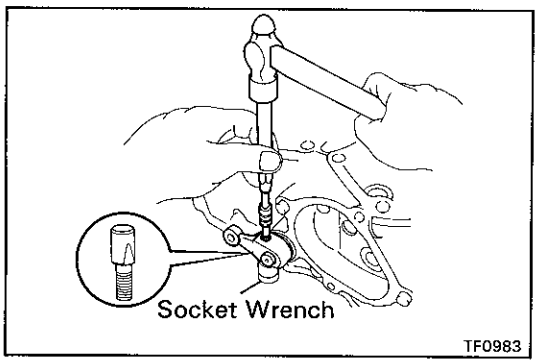

(b) Using a pin punch, hammer and socket wrench, install the lever lock pin.

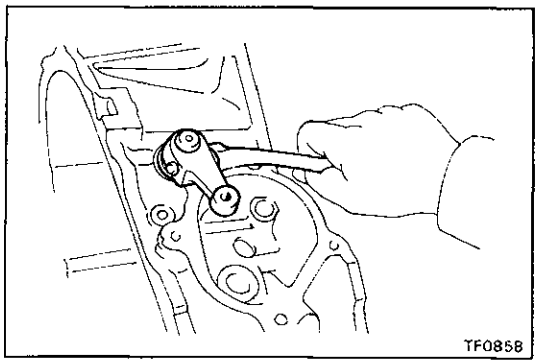

(c) Install the washer and nut.

Torque: 12 N·m (120 kgf·cm, 9 ft·lbf)

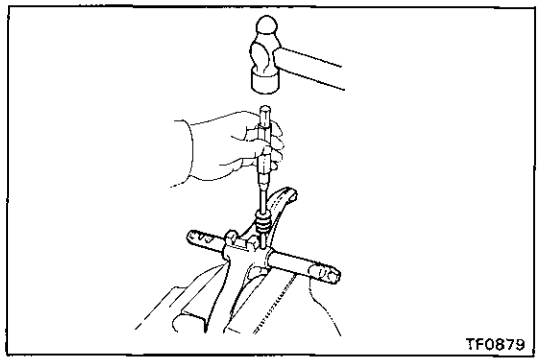

4. ASSEMBLE SHIFT FORK NO.1 AND FORK SHAFT

Using a pin punch and a hammer, drive in the slotted spring pin.

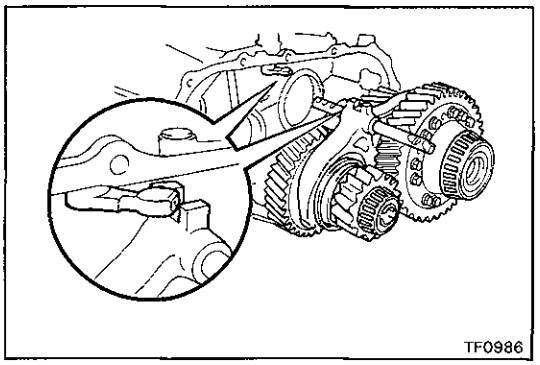

5. INSTALL IDLE GEAR ASSEMBLY, CENTER DIFFERENTIAL ASSEMBLY AND HIGH AND LOW SHIFT FORK ASSEMBLY TO FRONT CASE

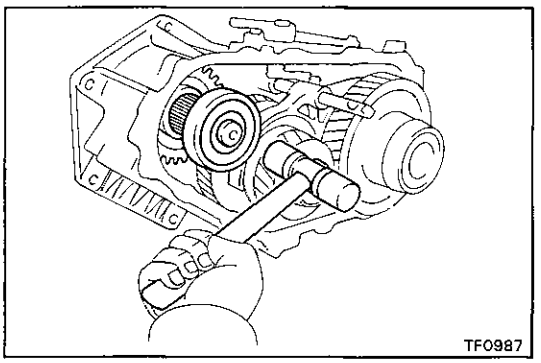

6. INSTALL INPUT SHAFT ASSEMBLY

Using a plastic hammer, tap in the input shaft.

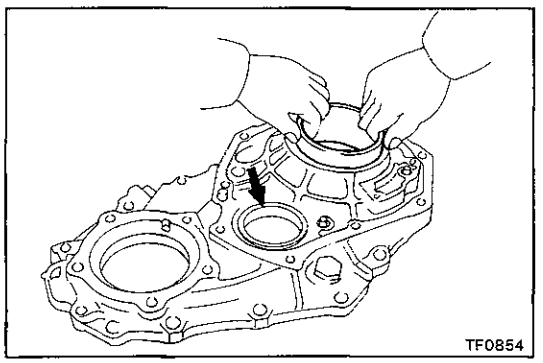

7. INSTALL TWO BEARING RACES TO REAR CASE

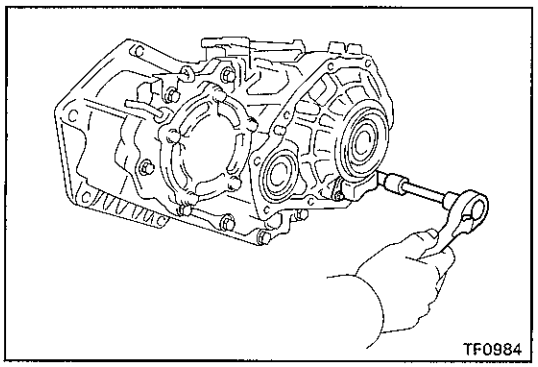

8. INSTALL OIL STRAINER TO REAR CASE

(a) Install the oil strainer.

(b) Install and torque the bolts.

Torque: 4.9 N·m (50 kgf·cm, 43 in.·lbf)

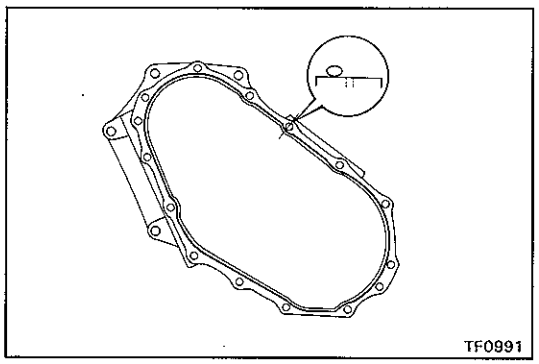

9. ASSEMBLE FRONT CASE AND REAR CASE

(a) Remove any packing material and be careful not to drop oil on the contacting surfaces of the front case.

(b) Apply seal packing to the front case as shown.

Seal packing: Part No. 08826-00090, THREE BOND 1281 or equivalent

HINT: Install the rear case as soon as the seal packing is applied.

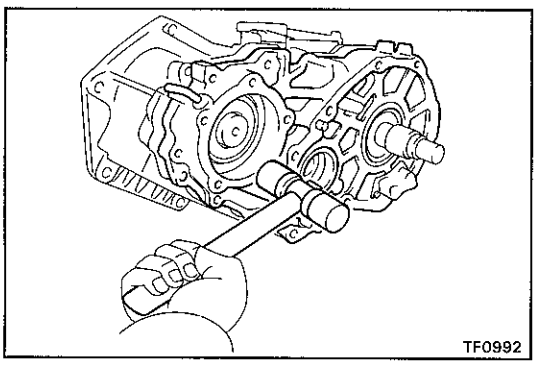

(c) Using a plastic hammer, tap the rear case and assemble it.

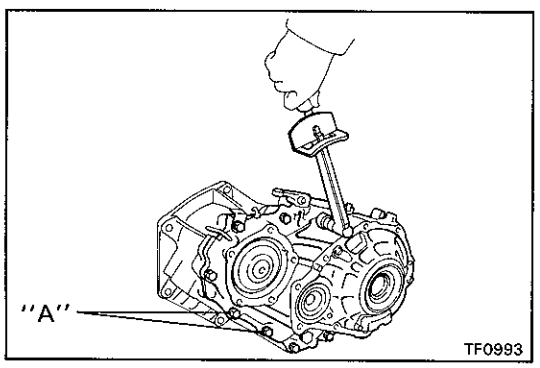

(d) Apply liquid sealer to the "A" bolt threads.

Sealant: Part No. 08833-00080, THREE BOND 1344, LOCTITE 242 or equivalent

(e) Install and torque the eight bolts.

Torque: 37 N·m (380 kgf·cm, 27 ft·lbf)

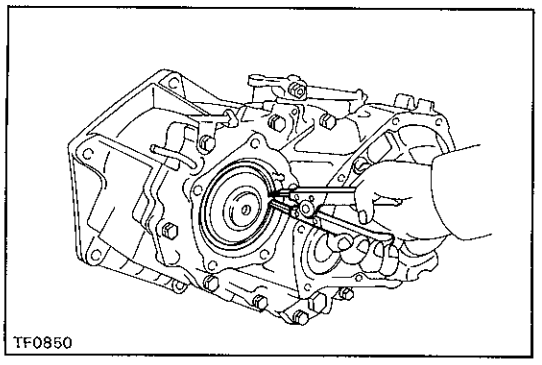

(f) Using snap ring pliers, install the snap ring.

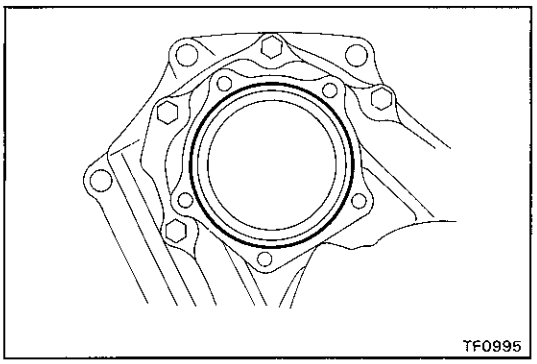
TF0995

10. INSTALL CASE COVER

(a) Remove any packing material and be careful not to drop oil on the contacting surfaces of the rear case.

(b) Apply seal packing to the rear case as shown.

Seal packing: Part No. 08826-00090, THREE BOND 1281 or equivalent

HINT: Install the case cover as soon as the seal packing is applied.

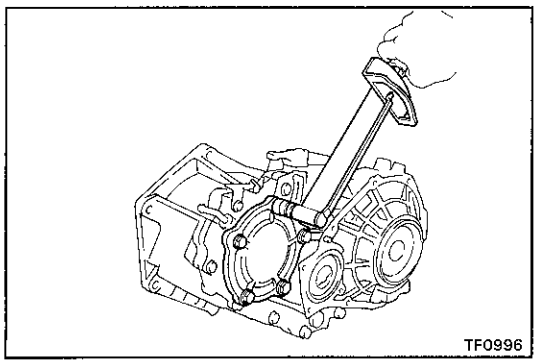
TF0996

(c) Install the case cover.

(d) Apply liquid sealer to the bolt threads.

Sealant: Part No. 08833-00080, THREE BOND 1344, LOCTITE 242 or equivalent

(e) Install and torque the five bolts.

Torque: 37 N·m (380 kgf·cm, 27 ft·lbf)

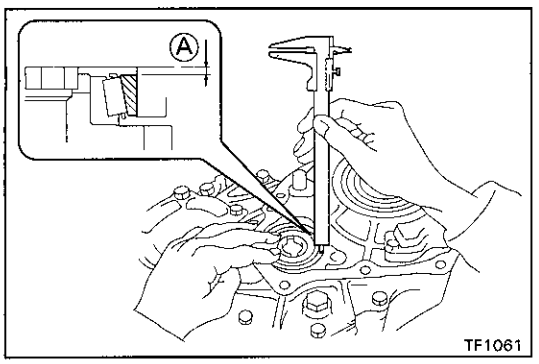

TF1061

11. SELECT ADJUSTING SHIMS FOR IDLER GEAR REAR TAPER ROLLER BEARING

(a) Using a vernier calipers, measure dimension Ⓐ .

HINT: Lightly hold down the bearing outer race in the thrust direction to eliminate any looseness before making the measurement.

(b) Using a steel straight edge and feeler gauge, measure the clearance of dimension Ⓑ .

(c) Calculate the required thickness of the adjusting shim. Thickness: Dimension Ⓐ + Dimension Ⓑ + (0.03 — 0.08 mm)

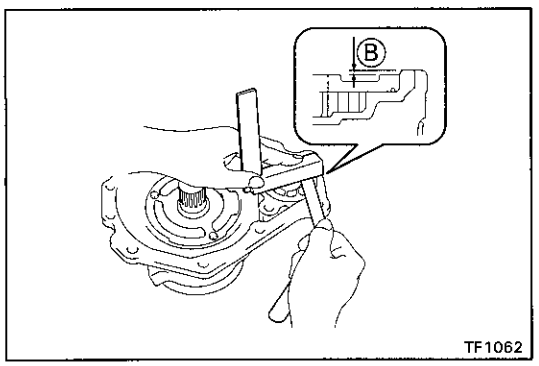

TF1062

(d) From the following table, select a shim with a thickness fitting within the range of the calculation in (c).

Mark	Thickness mm (in.)	Mark	Thickness mm (in.)
2	0.30 (0.0118)	8	3.20 (0.1260)
3	0.45 (0.0177)	9	3.40 (0.1339)
4	2.40 (0.0945)	10	3.60 (0.1417)
5	2.60 (0.1024)	11	3.80 (0.1496)
6	2.80 (0.1102)	12	4.00 (0.1575)
7	3.00 (0.1181)	13	0.55 (0.0216)

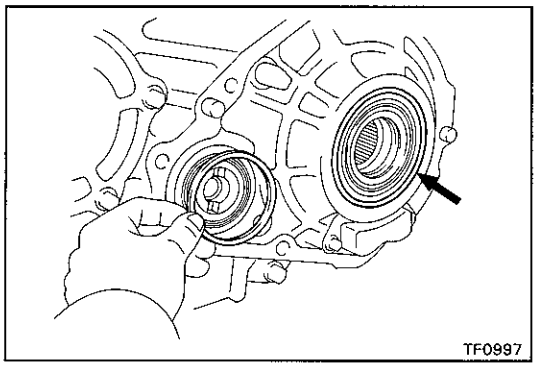

12. INSTALL ADJUSTING SHIMS TO IDLER GEAR AND OUTPUT SHAFT TAPER ROLLER BEARINGS

(a) Apply MP grease to the adjusting shims.

(b) Install the adjusting shims to bearing outer races.

HINT: Install the thinner shim on the bearing outer race side.

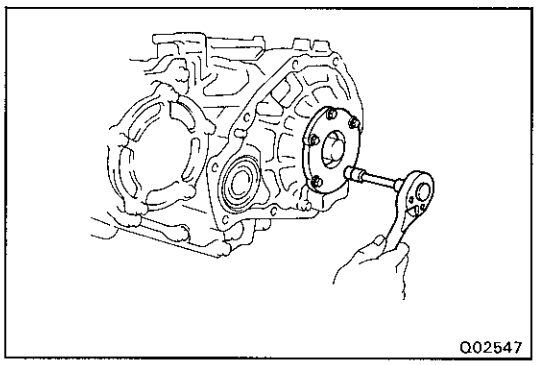

13. INSTALL RETAINER

Install the retainer with the five bolts.

Torque: 39.2 N·m (400 kgf·cm, 28 ft·lbf)

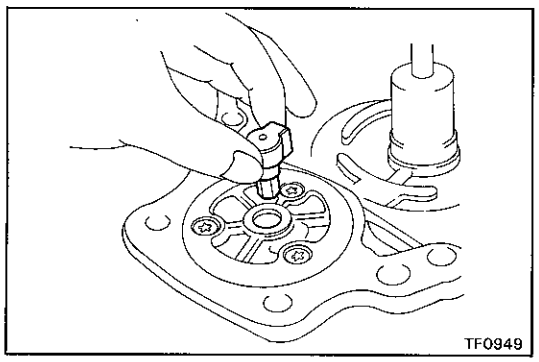

14. INSTALL REAR EXTENSION HOUSING

(a) Install the oil pump drive shaft.

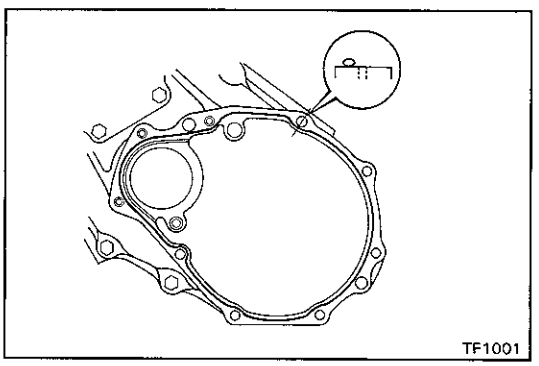

(b) Remove any packing material and be careful not drop oil on the contacting surfaces of the rear case.

(c) Apply seal packing to the rear case as shown.

Seal packing: Part No. 08826-00090, THREE BOND 1281 or equivalent

HINT: Install the rear extension housing as soon as the seal packing is applied.

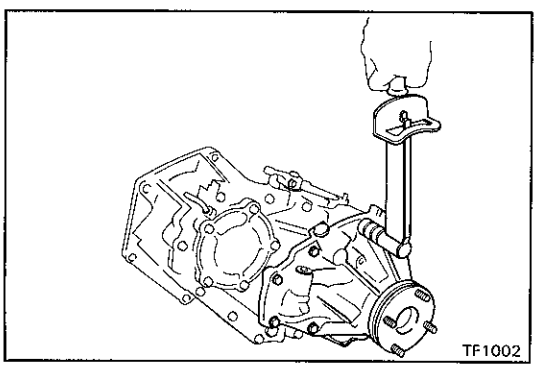

(d) Install the rear extension housing.

(e) Install and torque the nine bolts.

Torque: 37 N·m (380 kgf·cm, 27 ft·lbf)

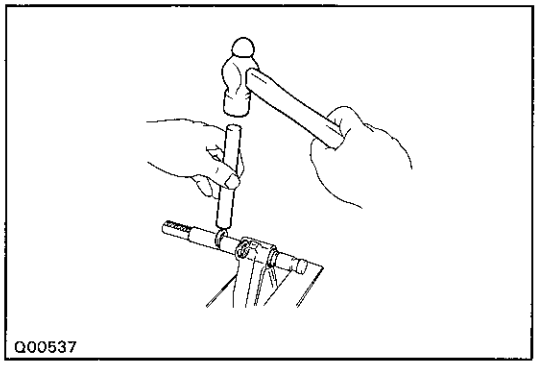
Q00537

15. ASSEMBLE SHIFT FORK NO.2 AND FORK SHAFT

(a) Assemble the shift fork No.2 and fork shaft.

(b) Using a brass bar and hammer, tap in the snap rings.

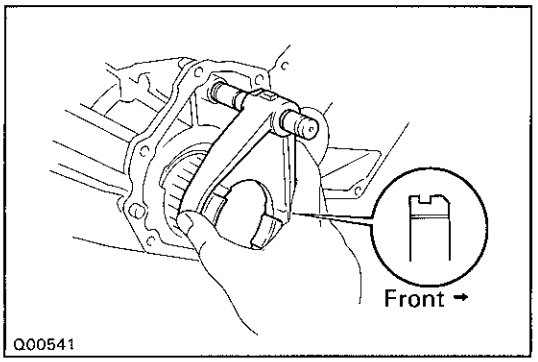

Q00541

16. INSTALL CLUTCH SLEEVE, SHIFT FORK NO.2 AND FORK SHAFT

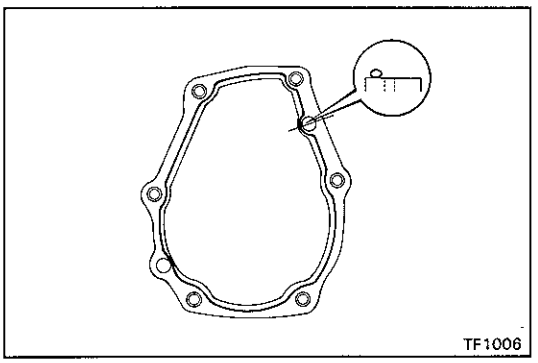
TF1006

17. INSTALL FRONT EXTENSION HOUSING

(a) Remove any packing material and be careful not to drop oil on the contacting surfaces of the front case.

(b) Apply seal packing to the front case as shown.

Seal packing: Part No. 08826-00090, THREE BOND 1281 or equivalent

HINT: Install the front extension housing as soon as the seal packing is applied.

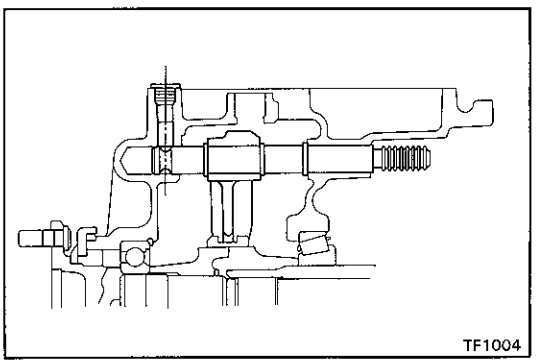
TF1004

(c) Set the clutch sleeve in 4WD condition in differential lock condition, install the front extension housing.

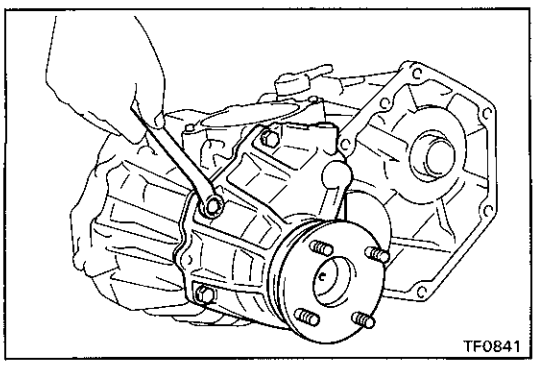
TF0841

(d) Install and torque the six bolts.

Torque: 37 N·m (380 kgf·cm, 27 ft·lbf)

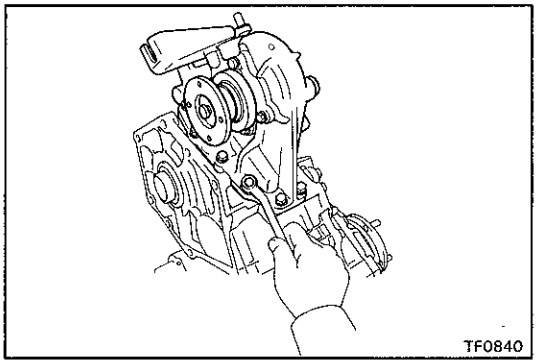

18. (w/ POWER TAKE-OFF)
INSTALL POWER TAKE-OFF CASE

(a) Install the power take-off case and a new gasket.

(b) Apply liquid sealer to the bolt threads.

Sealant: Part No. 08833-00080, THREE BOND 1344, LOCTITE 242 or equivalent

(c) Install and torque the ten bolts.

Torque: 19 N·m (195 kgf·cm, 14 ft·lbf)

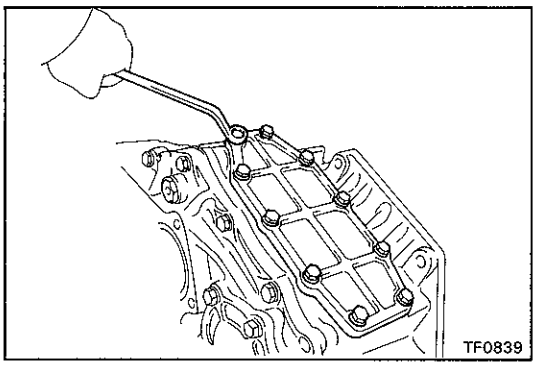

19. (w/o POWER TAKE-OFF)
INSTALL POWER TAKE-OFF COVER

(a) Install the power take-off cover and a new gasket.

(b) Apply liquid sealer to the bolt threads.

Sealant: Part No. 08833-00080, THREE BOND 1344, LOCTITE 242 or equivalent

(c) Install and torque the ten bolts.

Torque: 19 N·m (195 kgf·cm, 14 ft·lbf)

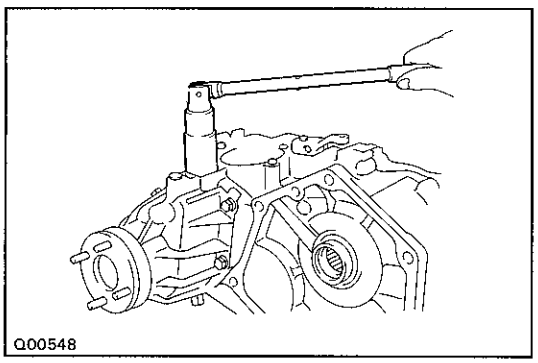

20. INSTALL TRANSFER INDICATOR SWITCHES

Install and torque the Center Diff Lock indicator switch, L4 position switch and neutral position switch.

Torque: 37 N·m (380 kgf·cm, 27 ft·lbf)

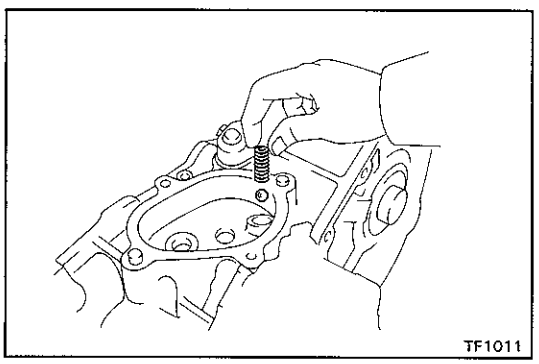

21. INSTALL BALL, SPRING AND SCREW PLUG

(a) Install the ball and spring.

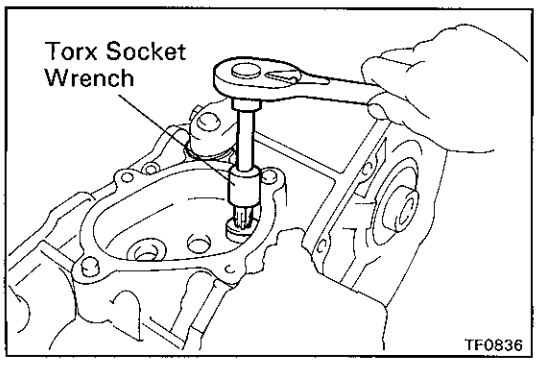

(b) Apply liquid sealer to the screw plug.

Sealant: Part No. 08833-00080, THREE BOND 1344, LOCTITE 242 or equivalent

(c) Install and torque the screw plug.

(Torx socket wrench T40 09042-00020)

Torque: 19 N·m (190 kgf·cm, 14 ft·lbf)

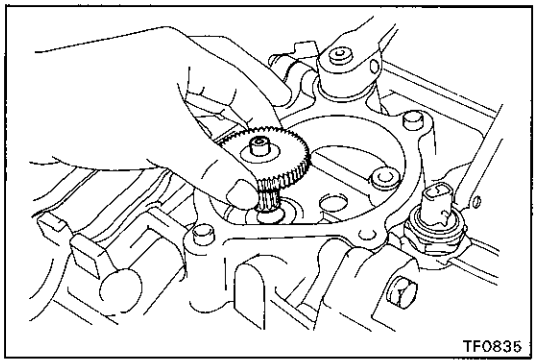

22. INSTALL OUTPUT GEAR

(a) Apply gear oil to the output gear.

(b) Install the output gear.

NOTICE: Do not turn the output gear.

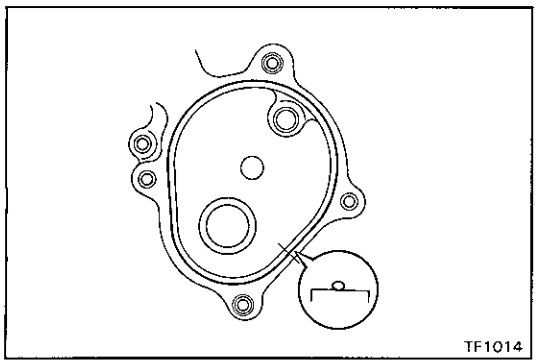

23. INSTALL MOTOR ACTUATOR

(a) Remove any packing material and be careful not to drop oil on the contacting surfaces of the front case.

(b) Apply seal packing to the front case as shown.

Seal packing: Part No. 08826-00090, THREE BOND 1281 or equivalent

HINT: Install the motor actuator as soon as the seal packing is applied.

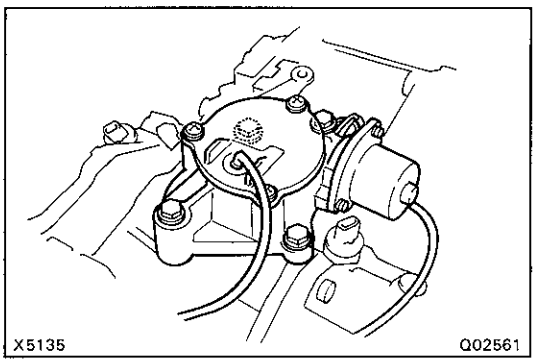

(c) Install the motor actuator.

HINT: Set the motor actuator in differential lock condition.

(d) Install and torque the four bolts.

Torque: 18.1 N·m (185 kgf·cm, 13.3 ft·lbf)

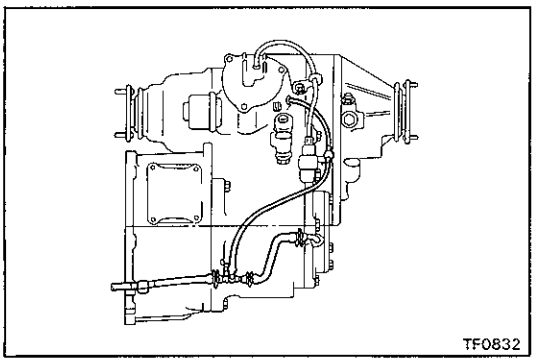

24. INSTALL BREATHER HOSE