ENGINE MECHANICAL

DESCRIPTION

EG27C–01

The 1FZ–FE and 1FZ–F engine is an in–line, 6–cylinder, 4.5 liter DOHC 24 valve engine.

EG

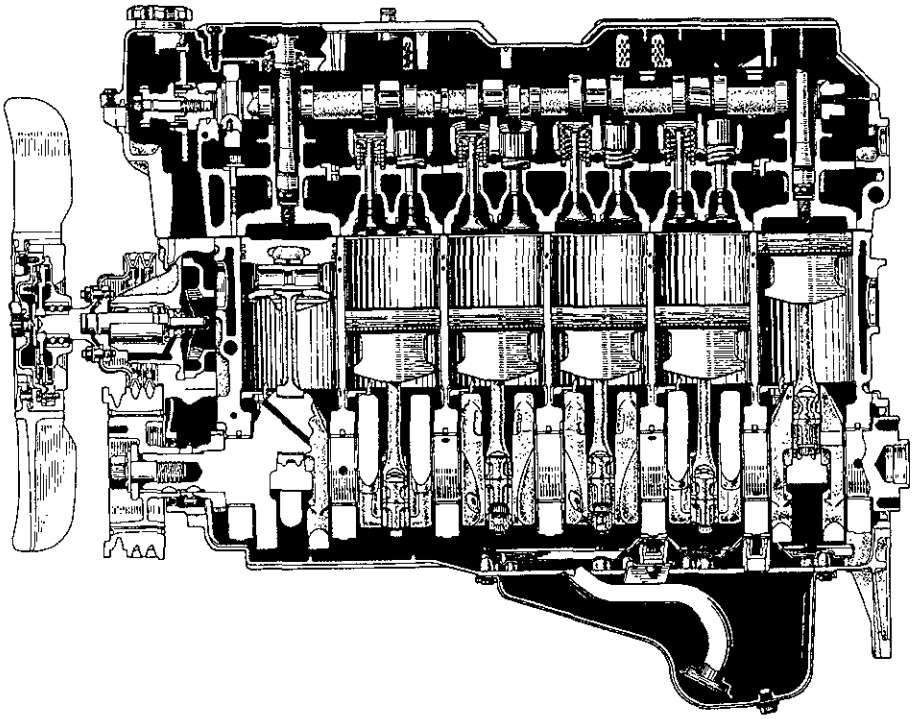

1FZ-FE

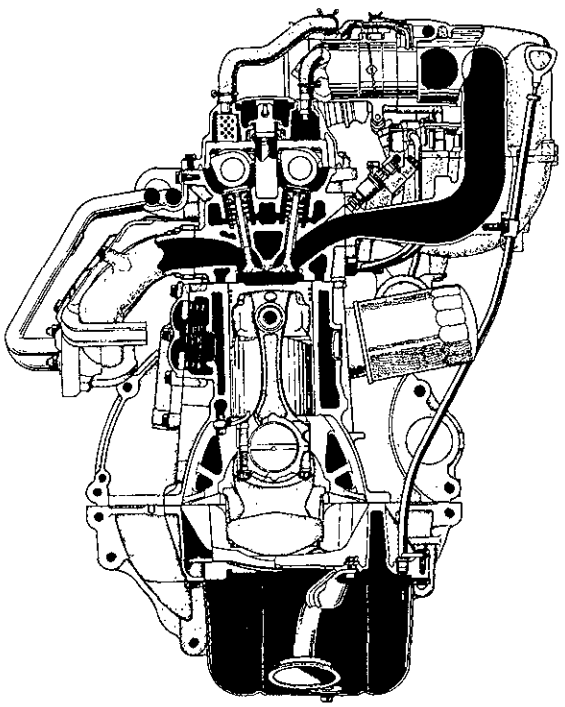

1FZ-F

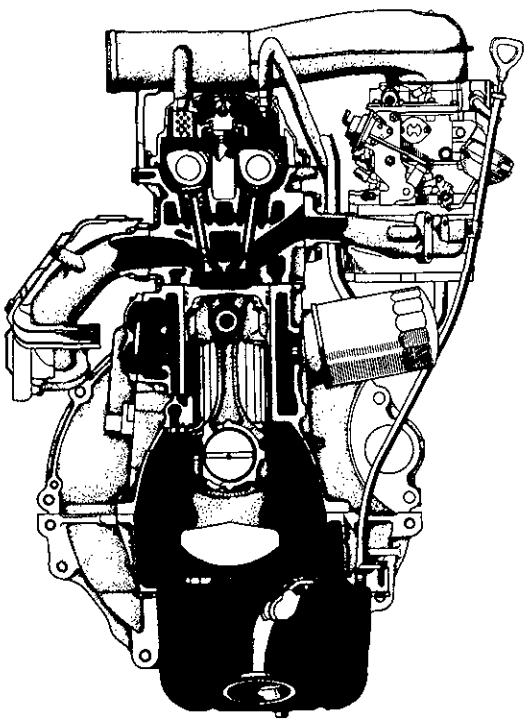

P09065
P09064 P05126

Z06448

The 1FZ—FE and 1FZ—F engines are an in—line, 6—cylinder engine with the cylinders numbered 1—2—3—4—5—6 from front. The crankshaft is supported by 7 bearings inside the crankcase. These bearings are made of aluminum alloy.

The crankshaft is integrated with 12 weights for balance. Oil holes are provided in the crankshaft to supply oil to the connecting rods, bearing, pistons and other components.

The firing order is 1—5—3—6—2—4. The cylinder head is made of aluminum alloy, with a cross flow type intake and exhaust layout and with pent—roof type combustion chambers. The spark plugs are located in the center of the combustion chambers.

Exhaust and intake valves are equipped with irregular pitch springs made of special valve spring carbon steel which are capable of following for the full range of engine speeds.

The intake camshaft is driven by a timing chain, and a gear on the intake camshaft engages with a gear on the exhaust camshaft to drive it. The cam journal is supported at 7 places between the valve lifters of each cylinder and on the front end of the cylinder head. Lubrication of the cam journals and gears is accomplished by oil being supplied through the oiler port in the center of the camshaft.

Valve adjusting shims are located above the valve lifters.

Pistons are made of high temperature—resistant aluminum alloy, and a depression is built into the piston head to prevent interference with the valves.

Piston pins are the full—floating type, with the pins fastened to neither the piston boss nor the connecting rods. Instead, snap rings are fitted on both ends of the pins, preventing the pins from falling out.

The No.1 compression ring is made of stianless steel and the No.2 compression ring is made of cast iron. The oil ring is made of a stainless steel. The outer diameter of each piston ring is slightly larger than the diameter of the piston and the flexibility of the rings allows them to hug the cylinder walls when they are mounted on the piston. No.1 and No.2 compression rings work to prevent gas leakage from the cylinder and the oil ring works to scrape oil off the cylinder walls to prevent it from entering the combustion chambers.

The cylinder block is made of cast iron. It has 6 cylinder which are approximately twice the length of the piston stroke. The top of each cylinder is closed off by the cylinder head and the lower end of the cylinders becomes the crankcase, in which the crankshaft is installed. In addition, the cylinder block contains a water jacket, through which coolant is pumped to cool the cylinders.

No.1 and No.2 oil pans are bolted onto the bottom of the cylinder block. The No.1 oil pan is an oil reservoir made of combination of aluminum alloy. The No.2 oil pan is an oil reservoir made of combination of pressed steel sheet. A dividing plate is included inside the oil pan to keep sufficient oil in the bottom of the pan even when the vehicle is tilted. This dividing plate also prevents the oil from making waves when the vehicle is stopped suddenly and the oil shifts away from the oil pump suction pipe.

Plastic region tightening bolts are used for the cylinder head, main bearing cap and connecting rod.