CYLINDER HEAD (1FZ–FE)

COMPONENTS

EG08K–06

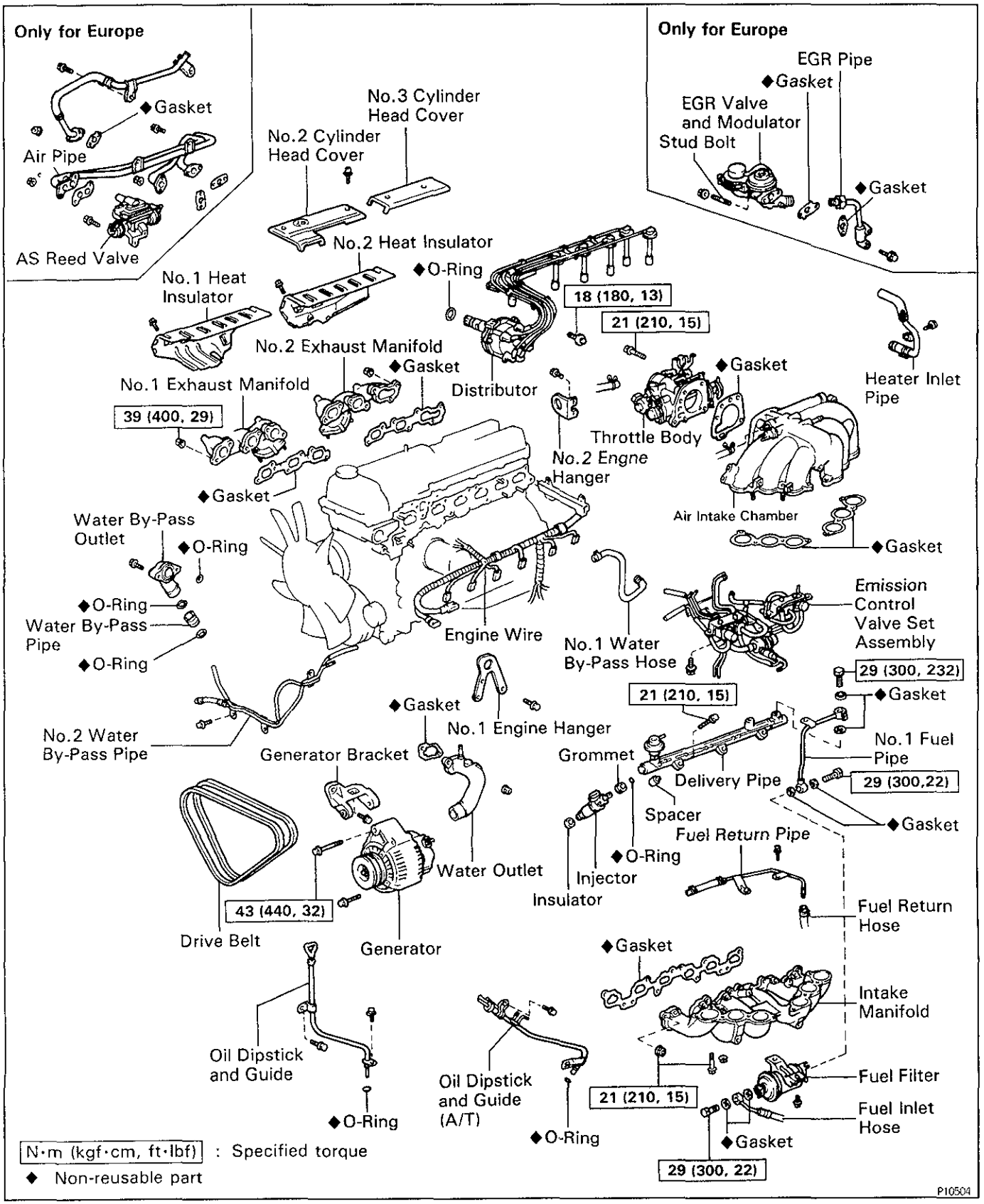

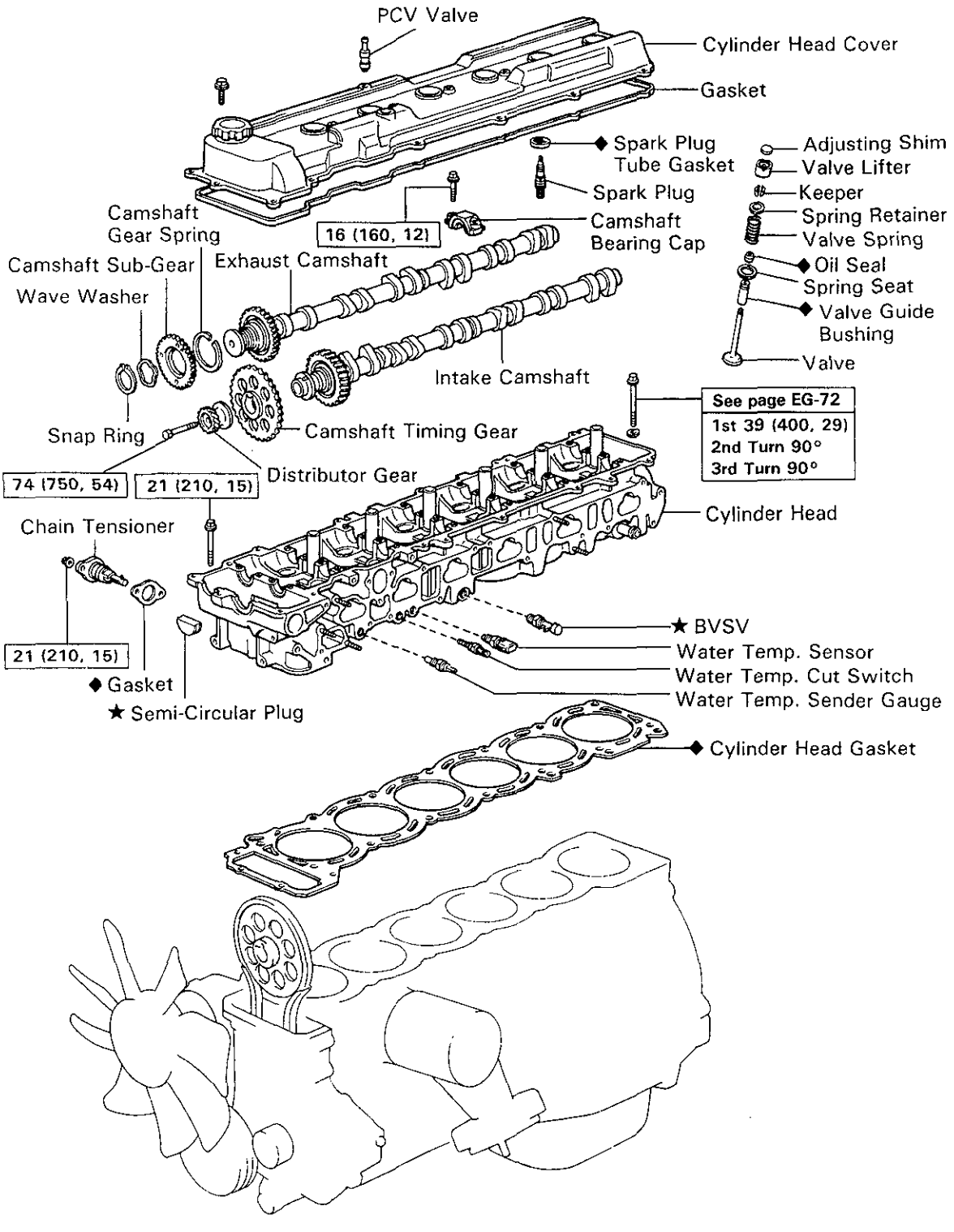

N·m (kgf·cm, ft·lbf) : Specified torque

◆ Non-reusable part

★ Precoated part

P08547

Z06501

EG27J–01

CYLINDER HEAD REMOVAL

(See Components for Removal and Installation)

EG

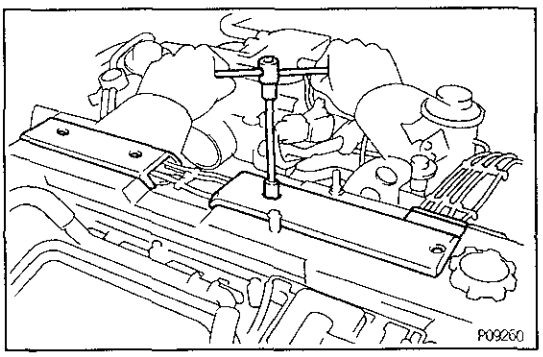

1. REMOVE NO.2 AND NO.3 CYLINDER HEAD COVERS

Remove the four bolts and head covers.

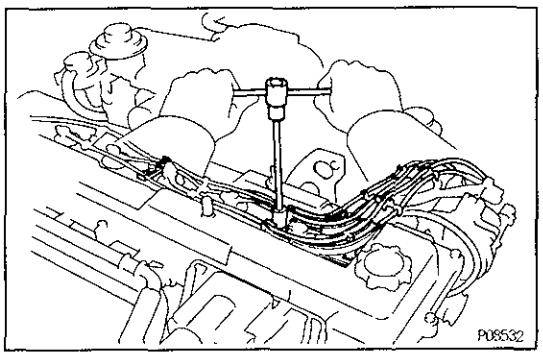

2. REMOVE DISTRIBUTOR

(a) Remove the two mounting bolts of the No.1 and No.2 cord clamps.

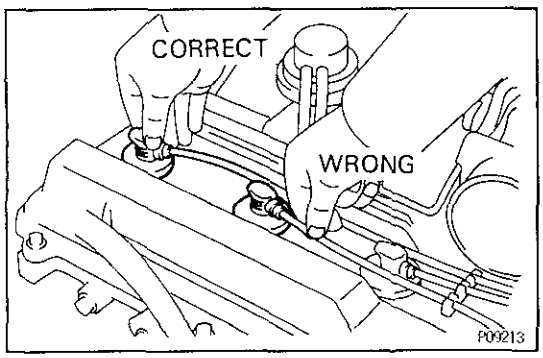

(b) Disconnect the high – tension cords at the rubber boot.

DO NOT pull on the cords.

NOTICE: Pulling on or bending the cords may damage the conductor inside.

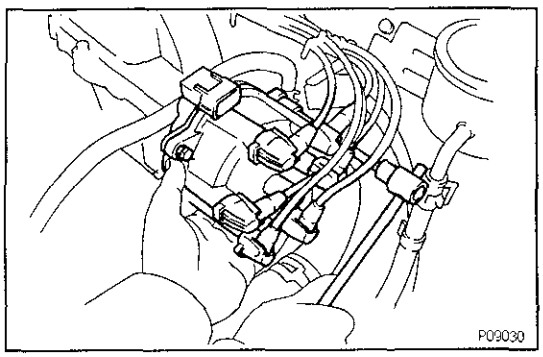

(c) Remove the hold–down bolt and distributor.

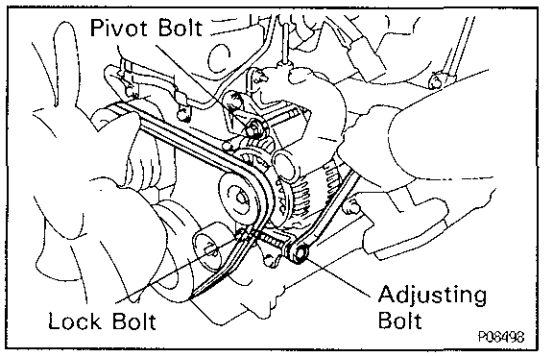

3. REMOVE ALTERNATOR

(a) Loosen the lock bolt, pivot bolt and adjusting bolt, and remove the drive belts.

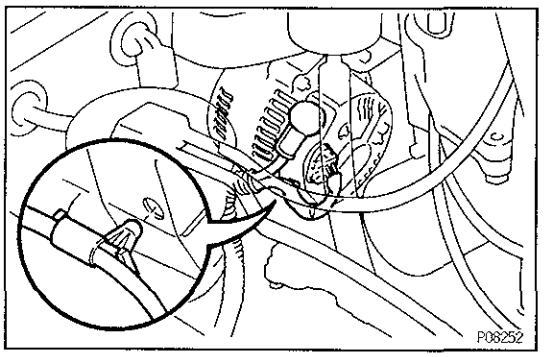

(b) Disconnect the alternator connector.
(c) Remove the nut, and disconnect the alternator wire.
(d) Disconnect the wire harness from the clip.

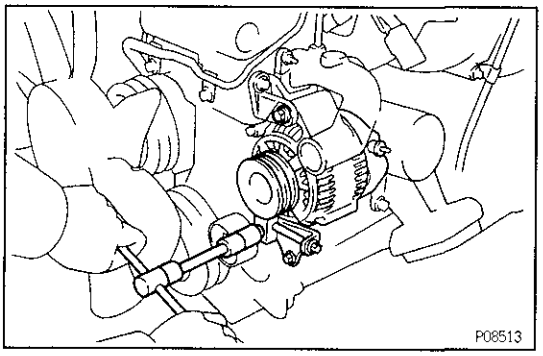

(e) Remove the lock bolt, bolt, nut and drive belt adjusting bar.
(f) Remove the pivot bolt and alternator.

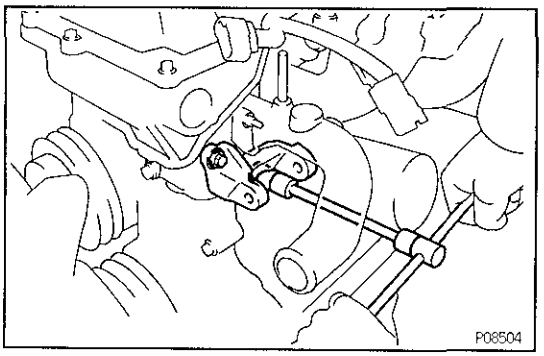

4. REMOVE ALTERNATOR BRACKET

Remove the two bolts and alternator bracket.

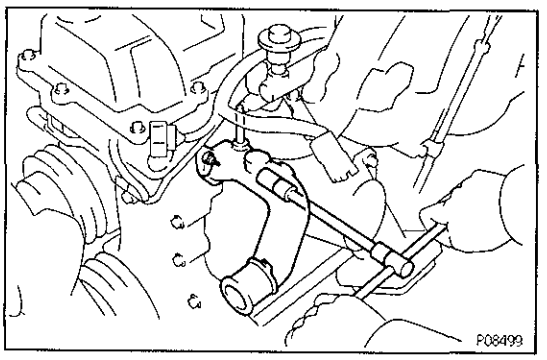

5. REMOVE WATER OUTLET

(a) Disconnect the radiator inlet hose.
(b) Disconnect the No.3 water by–pass hose.
(c) Remove the two nuts, water outlet and gasket.

EG

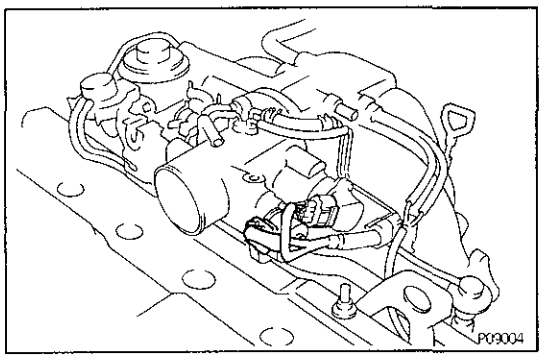

6. REMOVE THROTTLE BODY

(a) Disconnect the throttle position sensor connector.
(b) Disconnect the ISC valve connector.

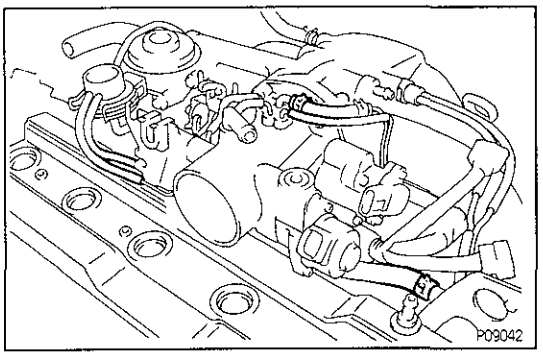

(c) Disconnect the three vacuum hoses.
(d) Disconnect the EVAP hose.
(e) Disconnect the water hose from the No.2 water by–pass pipe.

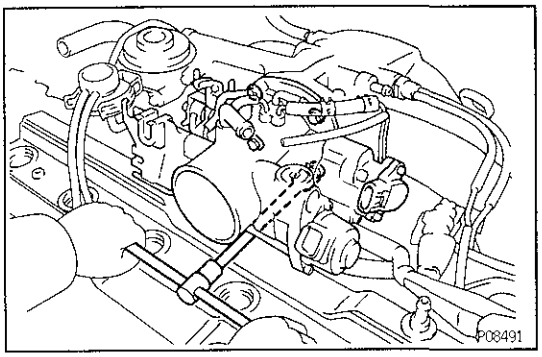

(f) Remove the four bolts, and disconnect the throttle body from the air intake chamber.
(g) Remove the throttle body gasket.

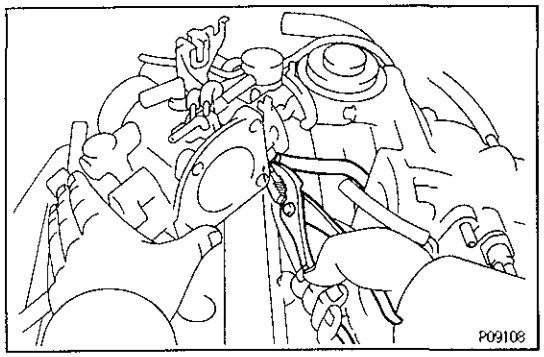

(h) Disconnect the No.1 water by–pass hose from the throttle body, and remove the throttle body.

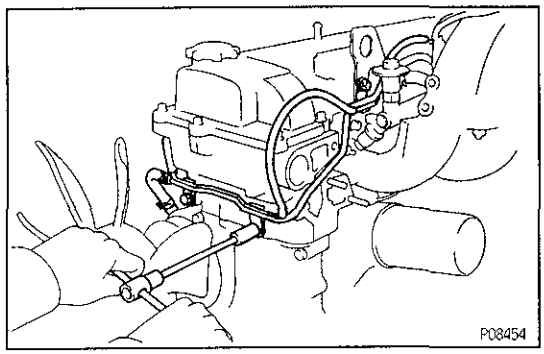

7. REMOVE NO.2 WATER BY–PASS PIPE WITH HOSES

(a) Disconnect the two vacuum hoses from the PAIR reed valve and No.2 emission control valve set.
(b) Disconnect the water hose from the timing chain cover.
(c) Remove the three bolts and No.2 water by–pass pipe with hoses.

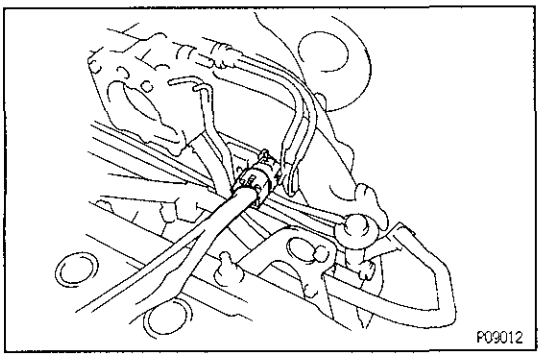

8. DISCONNECT CONNECTOR FOR EMISSION CONTROL VALVE SET ASSEMBLY

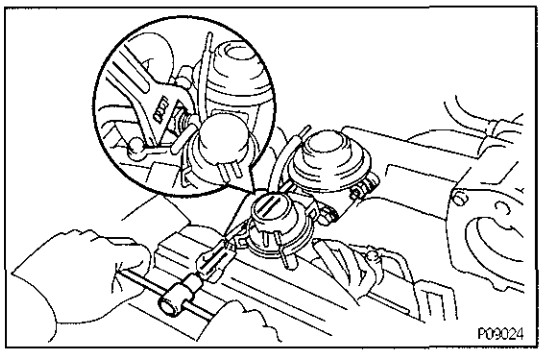

9. (Europe)
REMOVE EGR VALVE AND VACUUM MODULATOR

(a) Disconnect three vacuum hoses from the EGR valve.
(b) Loosen the EGR pipe union nut.
(c) Remove the two nuts holding the EGR valve and air intake chamber.

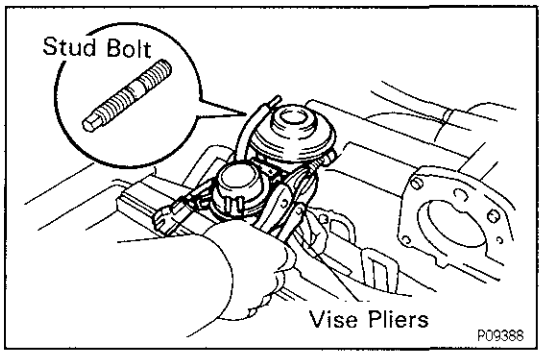

(d) Using vise pliers, remove the two stud bolts, EGR valve and vacuum modulator assembly and gasket.

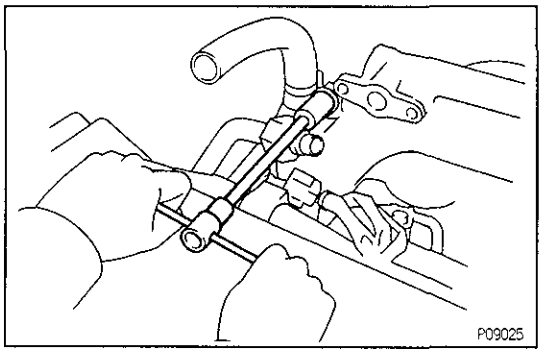

10. REMOVE BOLT HOLDING HEATER INLET PIPE AND AIR INTAKE CHAMBER

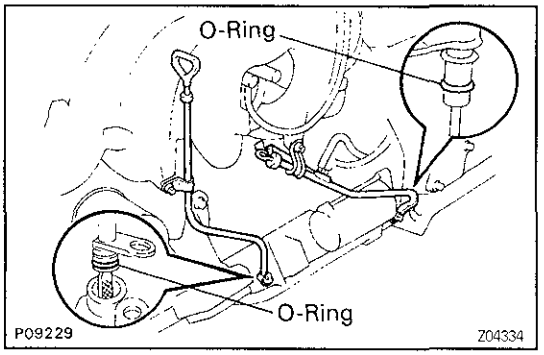

11. REMOVE OIL DIPSTICKS AND GUIDES FOR ENGINE AND TRANSMISSION

(a) Remove the two mounting bolts.
(b) Pull out the dipstick together with dipstick guide.
(c) Remove the O–ring from the dipstick guide.

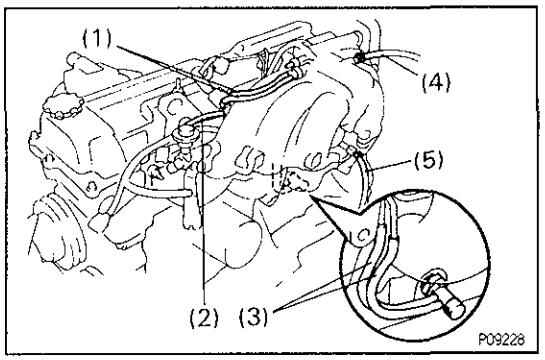

12. REMOVE AIR INTAKE CHAMBER

(a) Disconnect the following hoses:
  (1) Two vacuum hoses from gas filter
  (2) Vacuum hose from fuel pressure regulator
  (3) Two vacuum hoses from BVSV
  (4) Brake booster hose from brake booster union
  (5) EVAP hose from 3—way

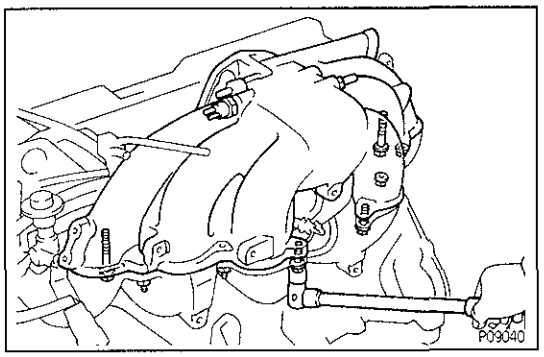

(b) Remove the four bolts, six nuts, air intake chamber and two gaskets.

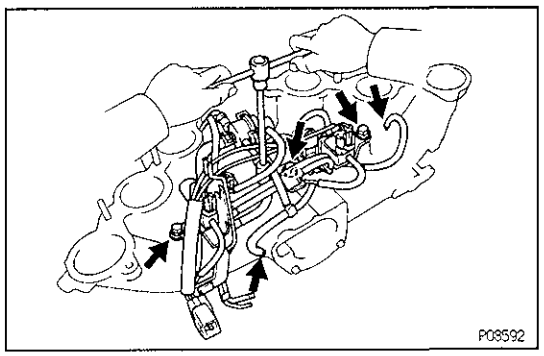

(c) Disconnect the air hose.
(d) Disconnect the vacuum hose
(e) Remove the four bolts and emission control valve set assembly from the air intake chamber.

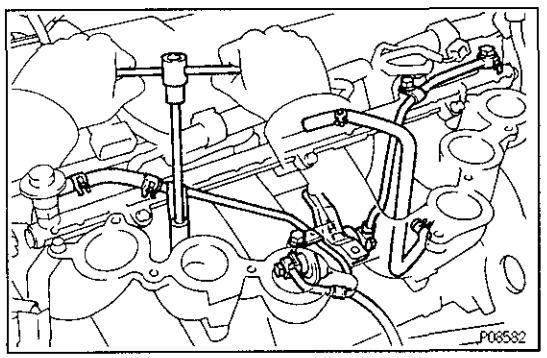

13. REMOVE FUEL RETURN PIPE

(a) Disconnect the fuel hose from the fuel pressure regulator.
(b) Remove the two bolts and fuel return pipe.

14. REMOVE NO.1 WATER BY—PASS HOSE

15. REMOVE NO.1 FUEL PIPE

Remove the two union bolts, bolt, four gaskets and No.1 fuel pipe.

16. DISCONNECT FUEL INLET HOSE

Remove the union bolt and two gaskets and disconnect the fuel inlet hose from the fuel filter.

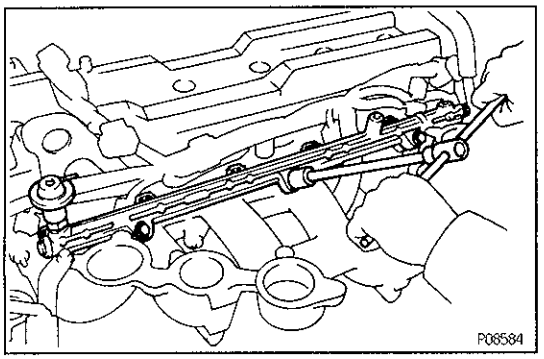

17. REMOVE DELIVERY PIPE AND INJECTORS

(a) Disconnect the six injector connectors.

(b) Remove the three bolts and delivery pipe together with the six injectors.

NOTICE: Be careful not to drop the injectors when removing the delivery pipe.

(c) Remove the six insulators and three spacers from the intake manifold.

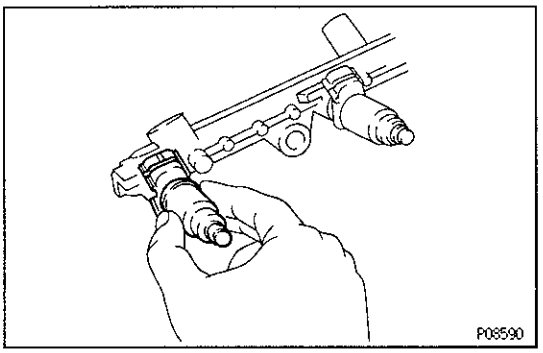

(d) Pull out the six injectors from the delivery pipe.

(e) Remove the O–ring and grommet from each injector.

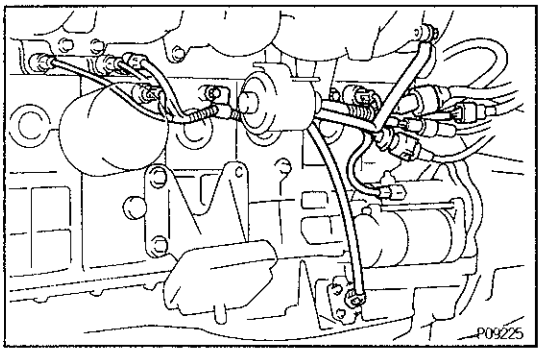

18. DISCONNECT ENGINE WIRE

(a) Disconnect the following connectors:
- (1) Water temp. sender gauge connector
- (2) Water temp. cut switch connector
- (3) Water temp. sensor connector
- (4) Two knock sensor connectors
- (5) Oxygen sensor connector (with clamps)
- (6) Four connectors from transmission
- (7) Starter connector
- (8) Oil level sensor connector

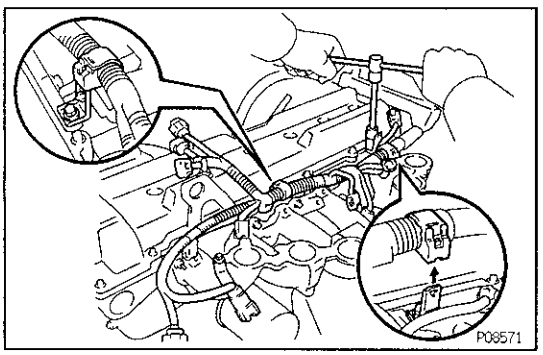

(b) Remove the bolt and disconnect the engine wire from the intake manifold.

(c) Remove the two bolts and disconnect the engine wire from the cylinder block.

(d) Disconnect the engine wire clamp.

(e) Remove the three bolts and disconnect the engine wire from the cylinder head and intake manifold.

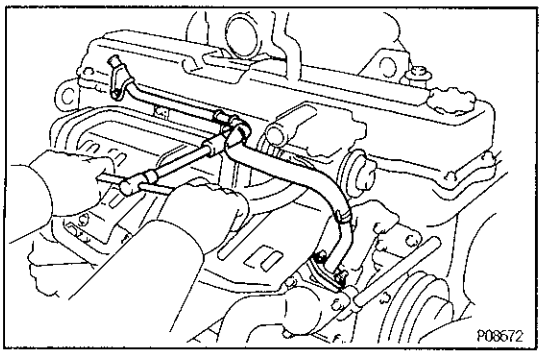

19. REMOVE HEATER PIPE

Remove the two bolts, two nuts, heater pipe and gasket.

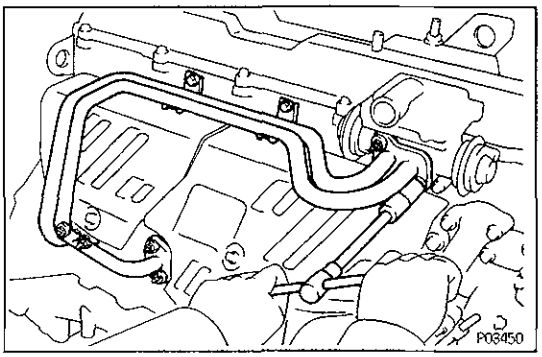

20. (Europe)
REMOVE AIR PIPE
Remove the two bolts, six nuts, air pipe and three gaskets.

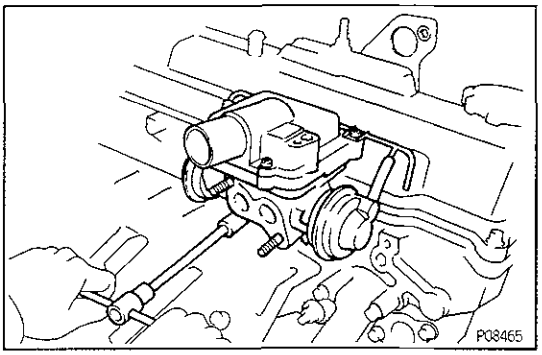

21. (Europe)
REMOVE AS REED VALVE
Remove the two bolts and AS reed valve.

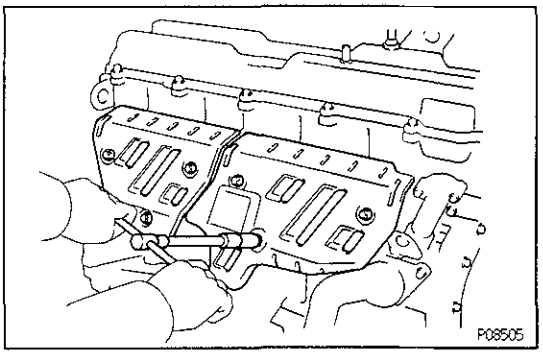

22. REMOVE NO.1 AND NO.2 EXHAUST MANIFOLDS
(a) Remove the six bolts, No.1 heat insulator and No.2 heat insulator.

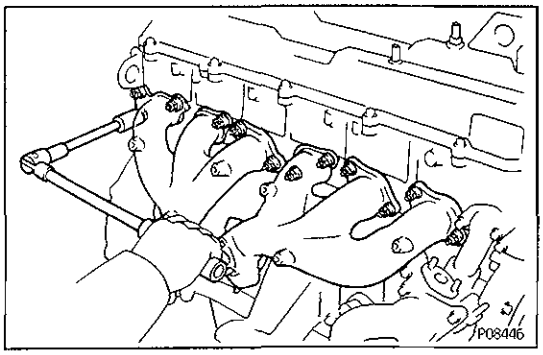

(b) Remove the 13 nuts, No.1 exhaust manifold, No.2 exhaust manifold and two gaskets.

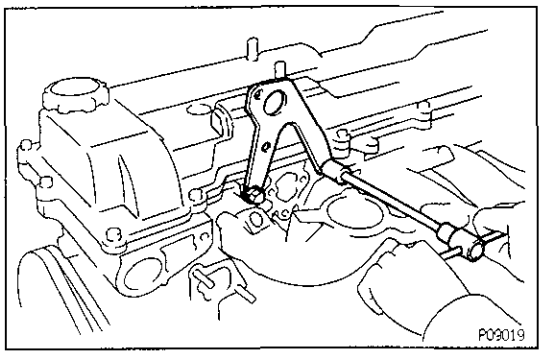

23. REMOVE NO.1 ENGINE HANGER
Remove the two bolts and No.1 engine hanger.

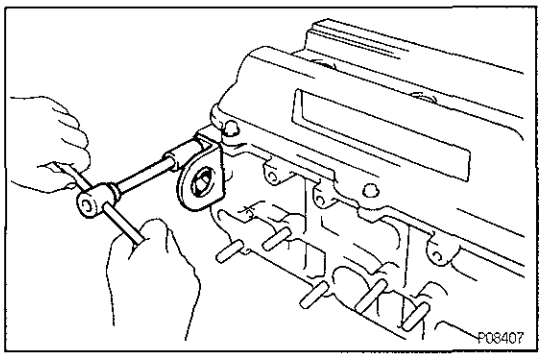

24. REMOVE NO.2 ENGINE HANGER

Remove the two bolts and No.2 engine hanger.

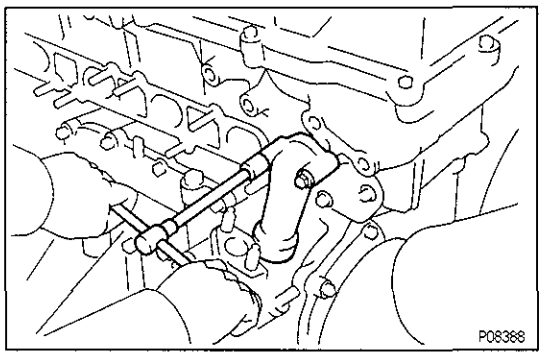

25. REMOVE WATER BY–PASS OUTLET AND PIPE

(a) Remove the two bolts and water by–pass outlet and pipe.

(b) Remove the three O–rings from the water by–pass outlet and pipe.

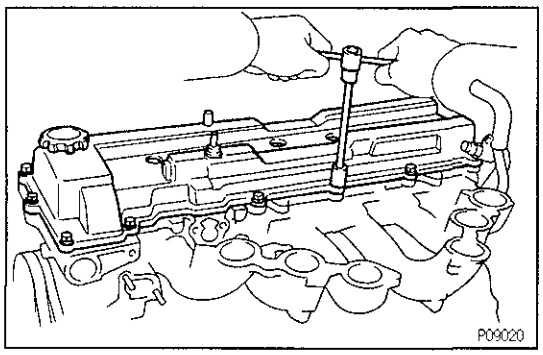

26. REMOVE CYLINDER HEAD COVER

Remove the 13 bolts, cylinder head cover and gasket.

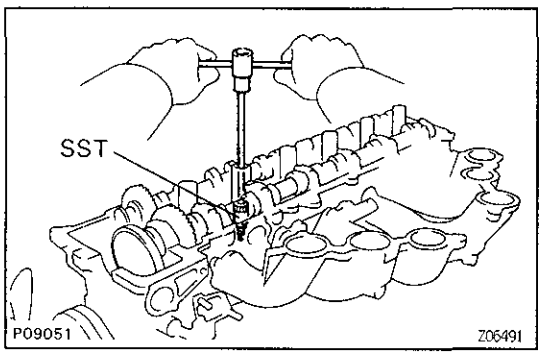

27. REMOVE SPARK PLUGS

Using SST, remove the spark plug.

SST 09155–16100

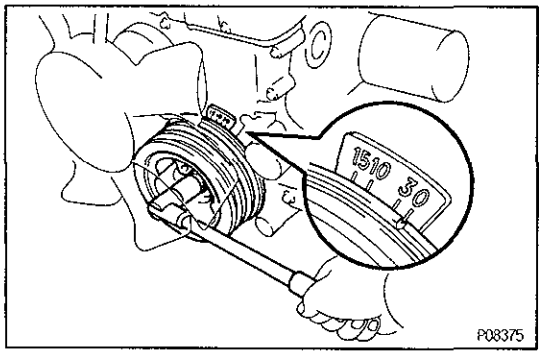

28. SET NO.1 CYLINDER TO TDC/COMPRESSION

(a) Turn the crankshaft pulley and align its groove with the "0" mark on the timing chain cover.

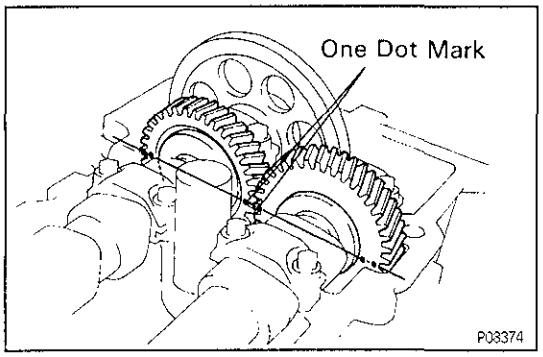

(b) Check that the timing marks (one and two dots) of the camshaft drive and driven gears are in straight line on the cylinder head surface as shown in the illustration. If not, turn the crankshaft one revolution (360°) and align the marks as above.

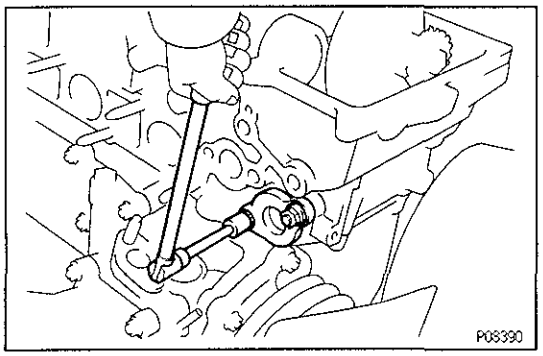

29. REMOVE CHAIN TENSIONER

Remove the two nuts, chain tensioner and gasket.

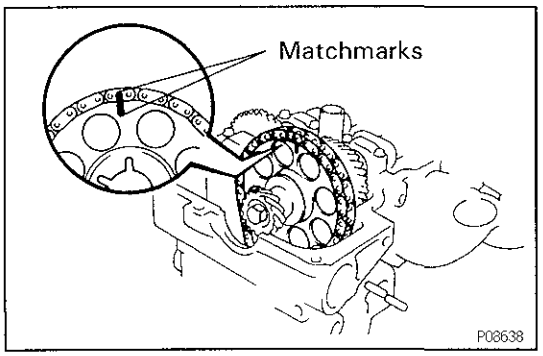

30. REMOVE CAMSHAFT TIMING GEAR

(a) Remove the semi–circular plug.

(b) Place the matchmarks on the camshaft timing gear and timing chain.

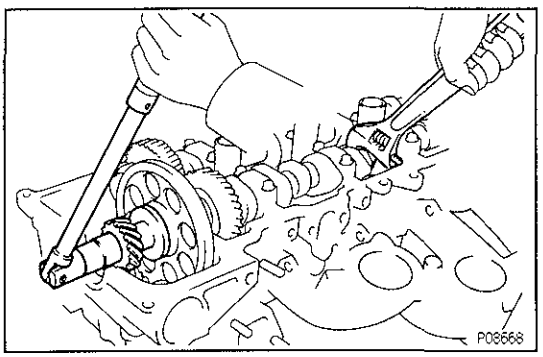

(c) Hold the intake camshaft with a wrench, remove the bolt and distributor gear.

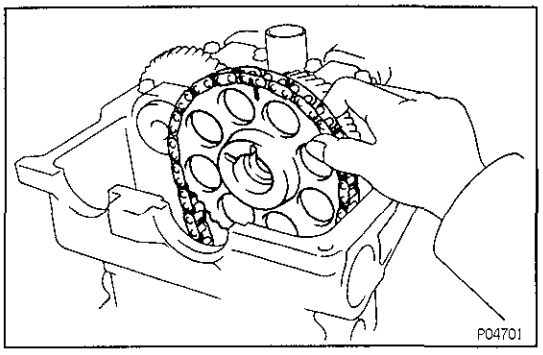

(d) Remove the camshaft timing gear and chain from the intake camshaft and leave on the slipper and damper.

31. REMOVE CAMSHAFTS

NOTICE: Since the thrust clearance of the camshaft is small, the camshaft must be kept level while it is being removed. If the camshaft is not kept level, the portion of the cylinder head receiving the shaft thrust may crack or be damaged, causing the camshaft to seize or break. To avoid this, the following steps should be carried out.

EG

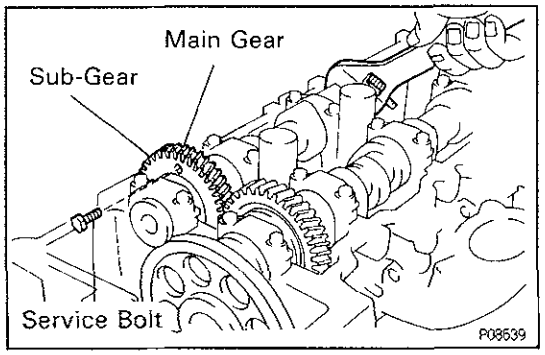

A. Remove exhaust camshaft

(a) Bring the service bolt hole of the driven sub–gear upward by turning the hexagon wrench head portion of the intake camshaft with a wrench.

(b) Secure the exhaust camshaft sub–gear to the driven gear with a service bolt.
Recommended service bolt:

Thread diameter	6 mm
Thread pitch	1.0 mm
Bolt length	16 – 20 mm (0.63 – 0.79 in.)

HINT: When removing the camshaft, make sure that the torsional spring force of the sub–gear has been eliminated by the above operation.

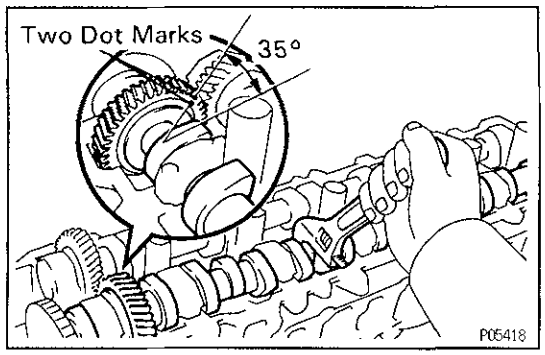

(c) Set the timing mark (two dot marks) of the camshaft driven gear at approx. 35° angle by turning the hexagon wrench head portion of the intake camshaft with a wrench.

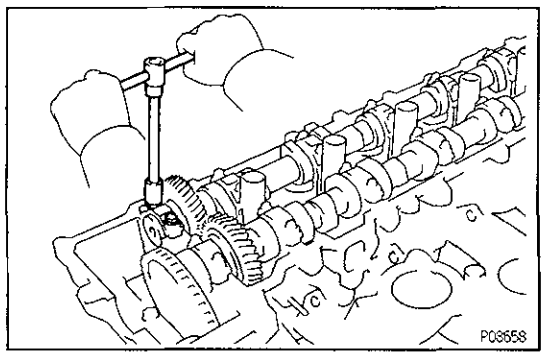

(d) Lightly push the camshaft towards the rear without applying excessive force.

(e) Loosen and remove the No.1 bearing cap bolts, alternately loosening the left and right bolts uniformly.

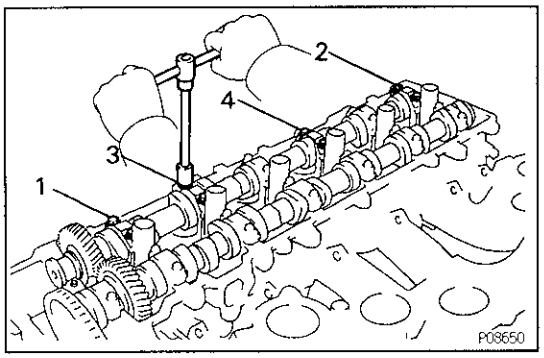

(f) Loosen and remove the No.2, No.3, No.5 and No.7 bearing cap bolts, alternately loosening the left and right bolts uniformly in several passes, in the sequence shown.

NOTICE: Do not remove the No.4 and No.6 bearing cap bolts at this stage.

(g) Remove the four bearing caps.

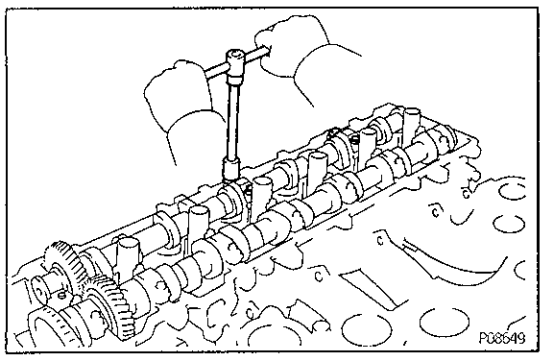

(h) Alternately and uniformly loosen and remove the No.4 and No.6 bearing cap bolts.

HINT:

- As the four No.4 and No.6 bearing cap bolts are loosened, make sure that the camshaft is lifted out straight and level.
- If the camshaft is not being lifted out straight and level, retighten the four No.4 and No.6 bearing cap bolts. Then reverse the order of above steps from (g) to (a) and repeat steps from (a) to (f) once again.

NOTICE: Do not pry on or attempt to force the camshaft with a tool or other object.

(i) Remove the two bearing caps and exhaust camshaft.

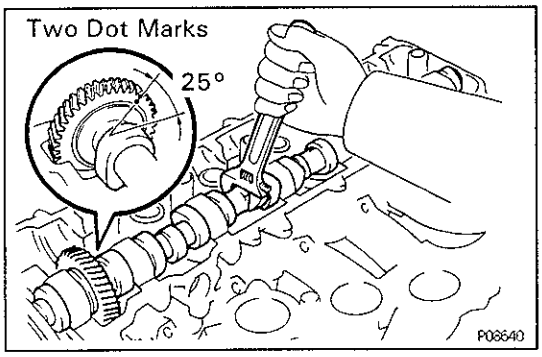

B. Remove intake camshaft

(a) Set the timing mark (two dot marks) of the camshaft drive gear at approx. 25° angle by turning the hexagon wrench head portion of the intake camshaft with a wrench.

HINT: The above angle arrows the No.1 and No.4 cylinder cam lobes of the intake camshaft to push their valve lifters evenly.

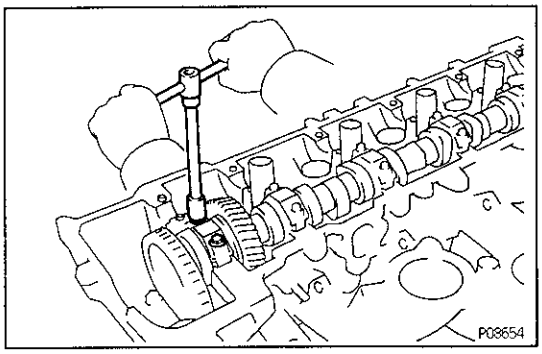

(b) Lightly push the intake camshaft towards the front without applying excessive force.

(c) Loosen and remove the No.1 bearing cap bolts, alternately loosening the left and right bolts uniformly.

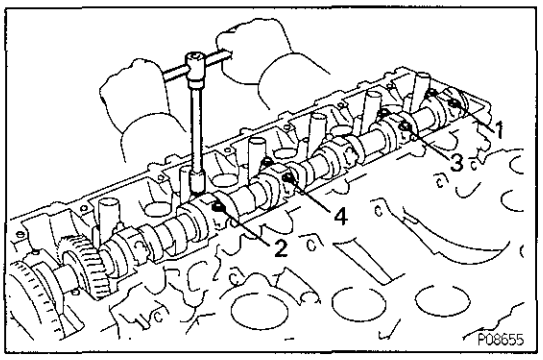

(d) Loosen and remove the No.3, No.4, No.6 and No.7 bearing cap bolts, alternately loosening the left and right bolts uniformly in several passes, in the sequence shown.

NOTICE: Do not remove the No.2 and No.5 bearing cap bolts at this stage.

(e) Remove the four bearing caps.

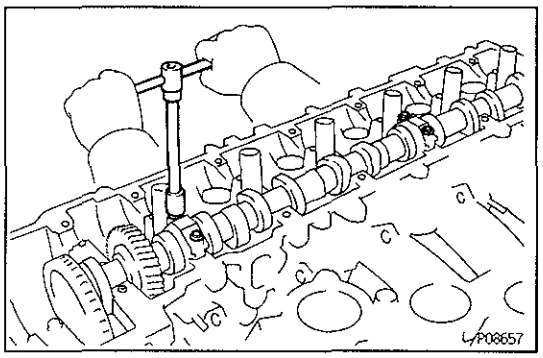

(f) Alternately and uniformly loosen and remove the No.2 and No.5 bearing cap bolts.

HINT:

- As the four No.2 and No.5 bearing cap bolts are loosened, make sure that the camshaft is lifted out straight and level.
- If the camshaft is not being lifted out straight and level, retighten the four No.2 and No.5 bearing cap bolts. Then reverse the order of above steps from (f) to (a) and repeat steps from (a) to (g) once again.

NOTICE: Do not pry on or attempt to force the camshaft with a tool or other object.

(g) Remove the two bearing caps and exhaust camshaft.

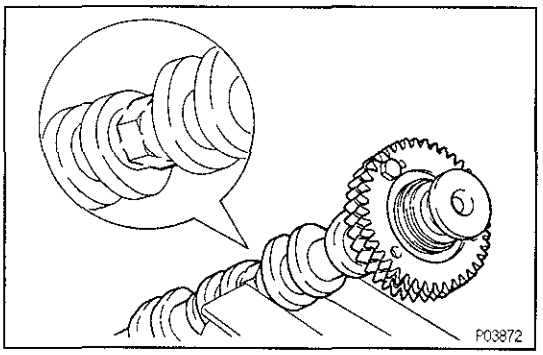

32. DISASSEMBLE EXHAUST CAMSHAFT

(a) Mount the hexagon wrench head portion of the camshaft in a vise.

NOTICE: Be careful not to damage the camshaft.

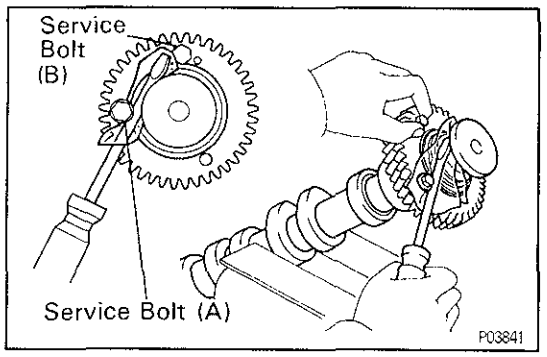

(b) Insert a service bolt (A) into the service hole of the camshaft sub–gear.

(c) Using a screwdriver, turn the sub–gear clockwise, and remove the service bolt (B).

NOTICE: Be careful not to damage the camshaft.

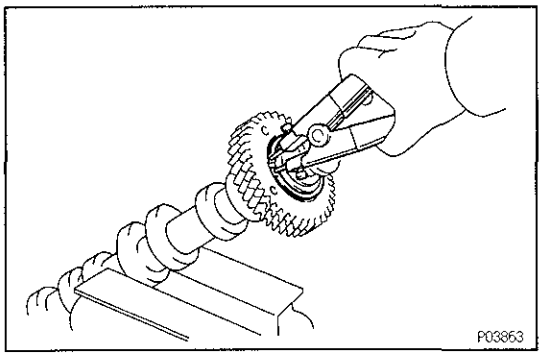

(d) Using snap ring pliers, remove the snap ring.

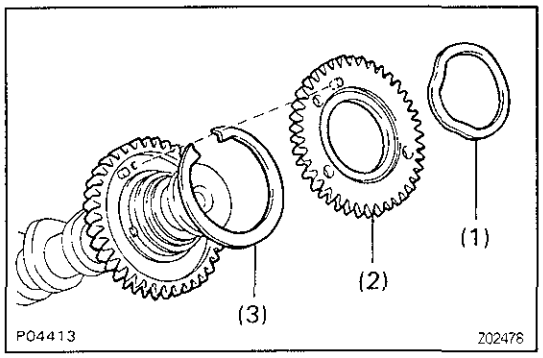

(e) Remove the following parts:
(1) Wave washer
(2) Camshaft sub–gear
(3) Camshaft gear spring

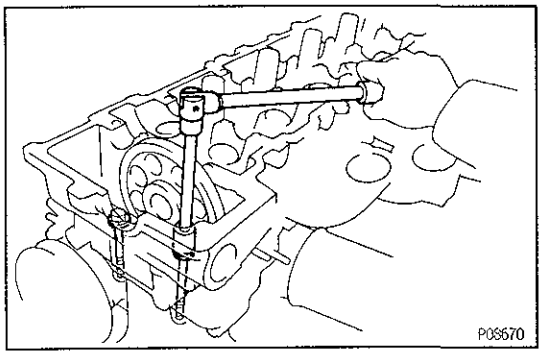

33. REMOVE CYLINDER HEAD

(a) Remove the two bolts in front of the head before the other head bolts are removed.

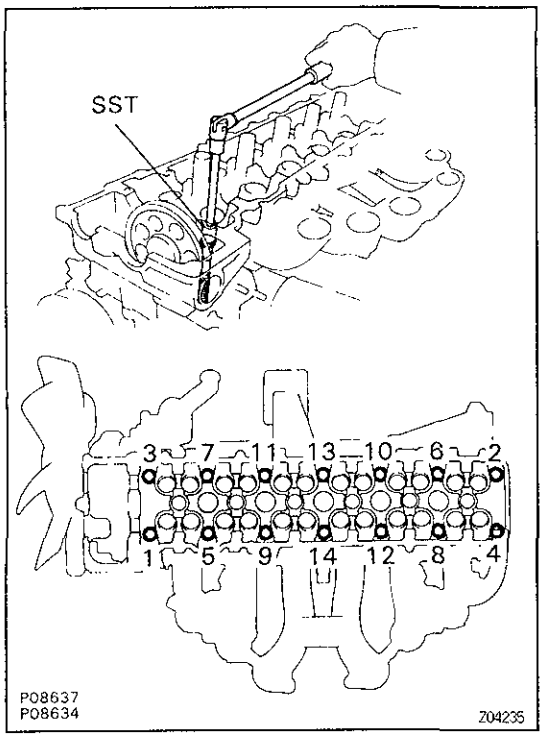

(b) Using SST, uniformly loosen and remove the 14 cylinder head bolts in several passes, in the sequence shown.
SST 09011–38121
NOTICE: Cylinder head warpage or cracking could result from removing bolts in incorrect order.

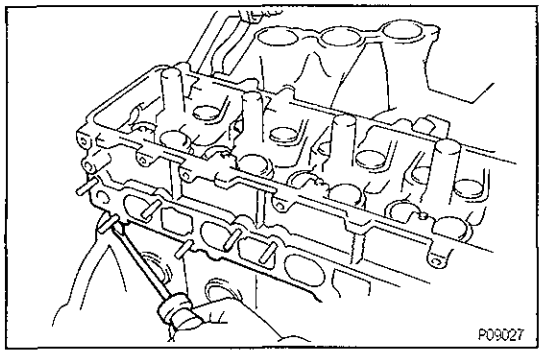

(c) Lift the cylinder head from the dowels on the cylinder block, and place the cylinder head on wooden blocks on a bench.
HINT: If the cylinder head is difficult to lift off, pry between the cylinder head and cylinder block with a screwdriver.
NOTICE: Be careful not to damage the contact surfaces of the cylinder head and cylinder block.

EG

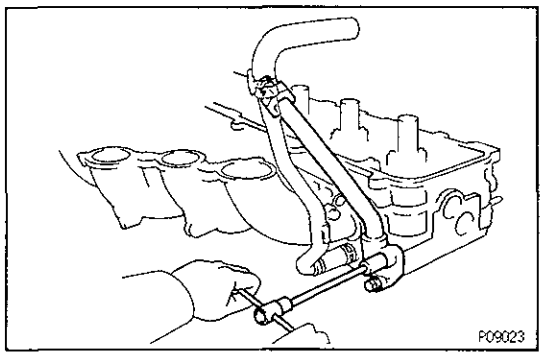

34. (Europe)
REMOVE EGR PIPE
Remove the two bolts, EGR pipe and gasket.

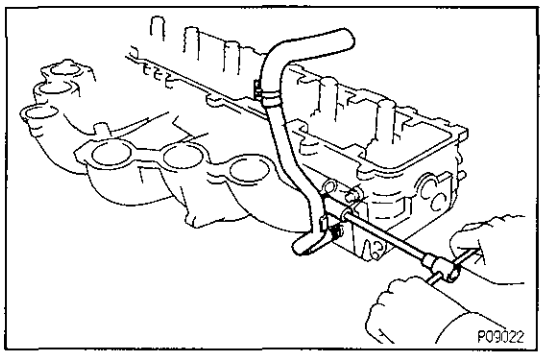

35. REMOVE HEATER INLET PIPE AND HOSE
Disconnect the heater hose, and remove the bolt and heater inlet pipe.

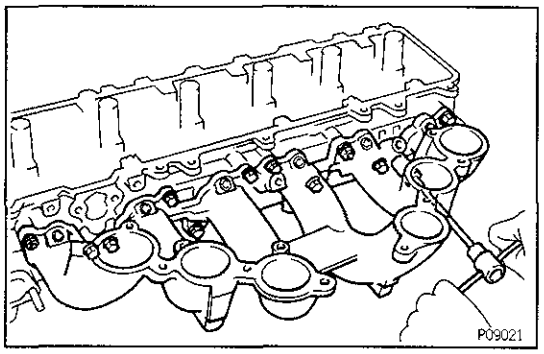

36. REMOVE INTAKE MANIFOLD WITH FUEL FILTER
Remove the six bolts, two nuts, intake manifold and gasket.

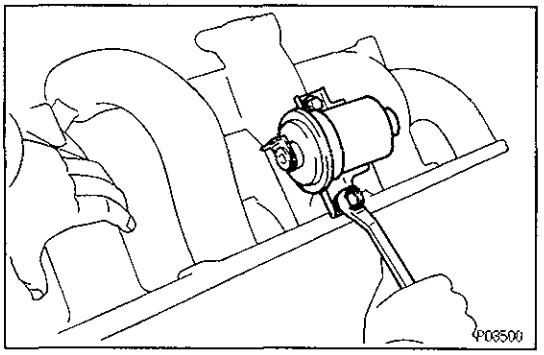

37. REMOVE FUEL FILTER
Remove the two bolts and fuel filter.

EGOVC-03

CYLINDER HEAD DISASSEMBLY

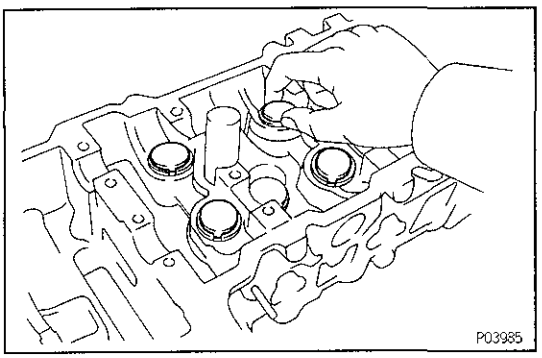

(See Components for Removal and Installation)

1. REMOVE VALVE LIFTERS AND SHIMS

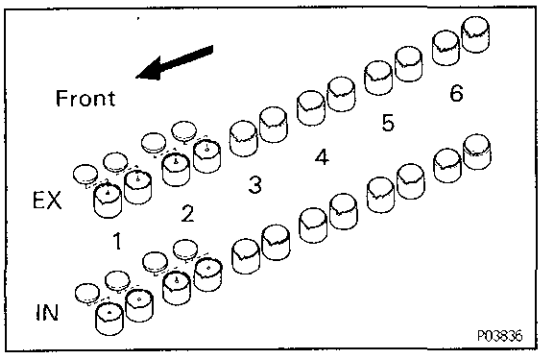

HINT: Arrange the valve lifters and shims in correct order.

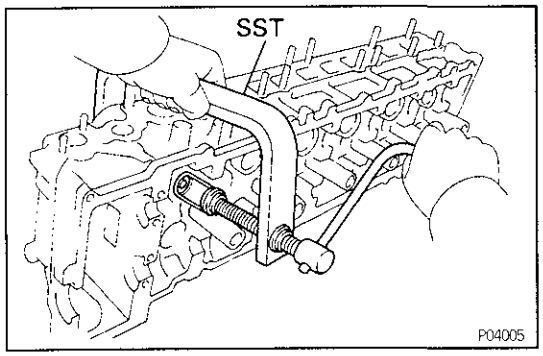

2. REMOVE VALVES

(a) Using SST, compress the valve spring and remove the two keepers.
SST 09202—70010

(b) Remove the spring retainer, valve spring and valve.

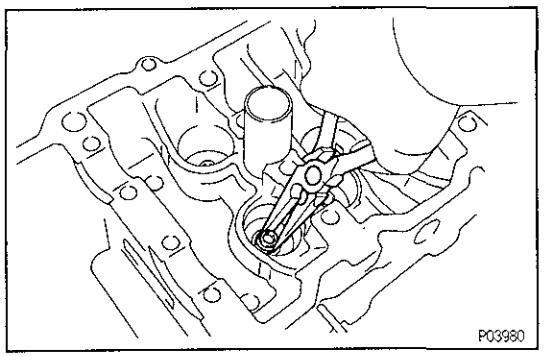

(c) Using needle—nose pliers, remove the oil seal.

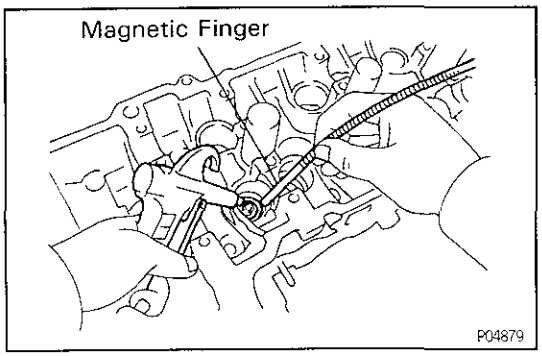

(d) Using compressed air and a magnetic finger, remove the spring seat by blowing air.

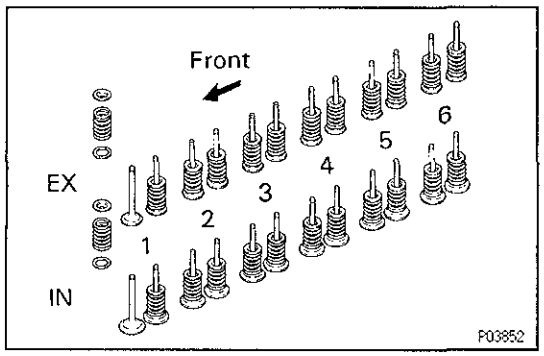

HINT: Arrange the valves, valve springs, spring seats and spring retainers in correct order.

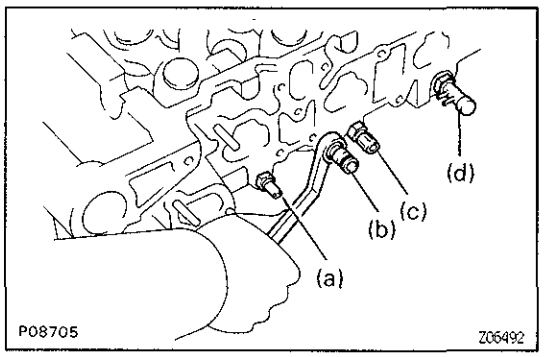

3. REMOVE FOLLOWING PARTS:

(a) Water temperature sender gauge
(b) Water temperature cut switch
(c) Water temperature sensor
(d) BVSV

EG1JX-02

CYLINDER HEAD COMPONENTS INSPECTION, CLEANING AND REPAIR

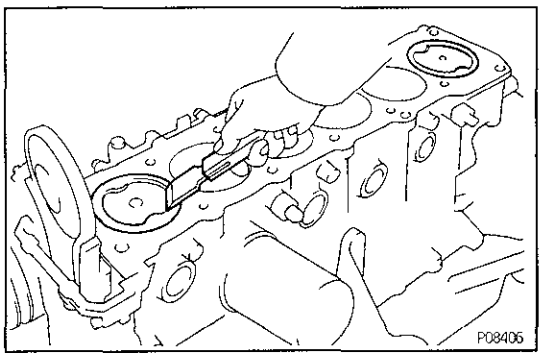

1. CLEAN TOP SURFACES OF PISTONS AND CYLINDER BLOCK

(a) Turn the crankshaft, and bring each piston to top dead center (TDC). Using a gasket scraper, remove all the carbon from the piston top surface.

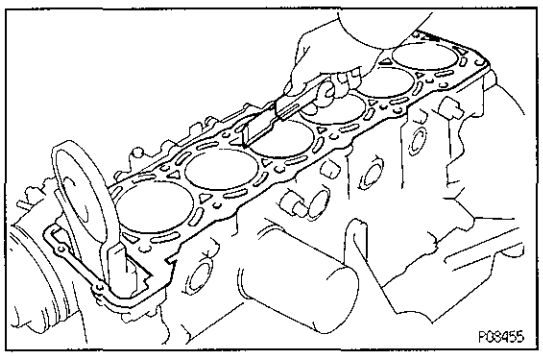

(b) Using a gasket scraper, remove all the gasket material from the cylinder block surface.

(c) Using compressed air, blow carbon and oil from the bolt holes.

CAUTION: Protect your eyes when using high–compressed air.

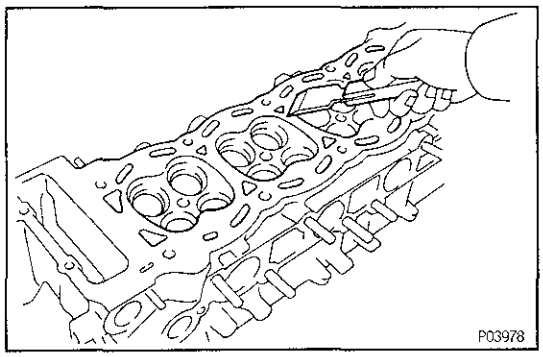

2. CLEAN CYLINDER HEAD

A. Remove gasket material

Using a gasket scraper, remove all the gasket material from the cylinder block contact surface.

NOTICE: Be careful not to scratch the cylinder block contact surface.

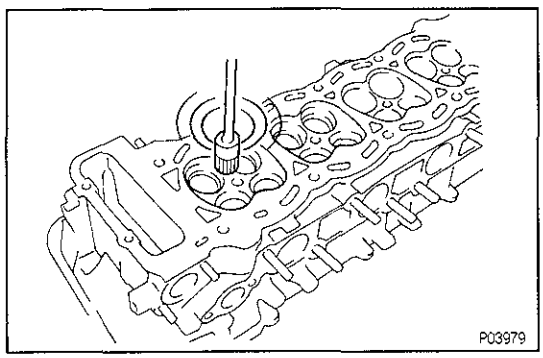

B. Clean combustion chambers

Using a wire brush, remove all the carbon from the combustion chambers.

NOTICE: Be careful not to scratch the cylinder block contact surface.

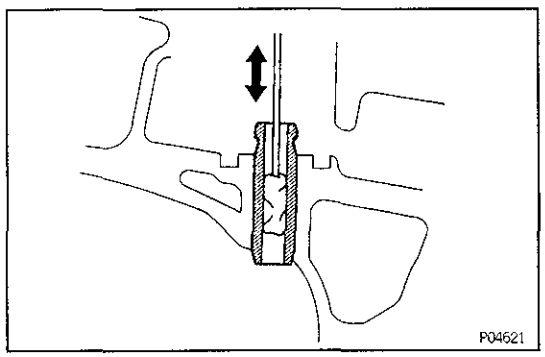

C. Clean valve guide bushings

Using a valve guide bushing brush and solvent, clean all the guide bushings.

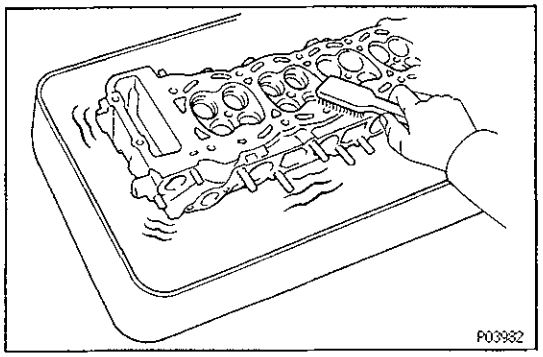

D. Clean cylinder head

Using a soft brush and solvent, thoroughly clean the cylinder head.

EG

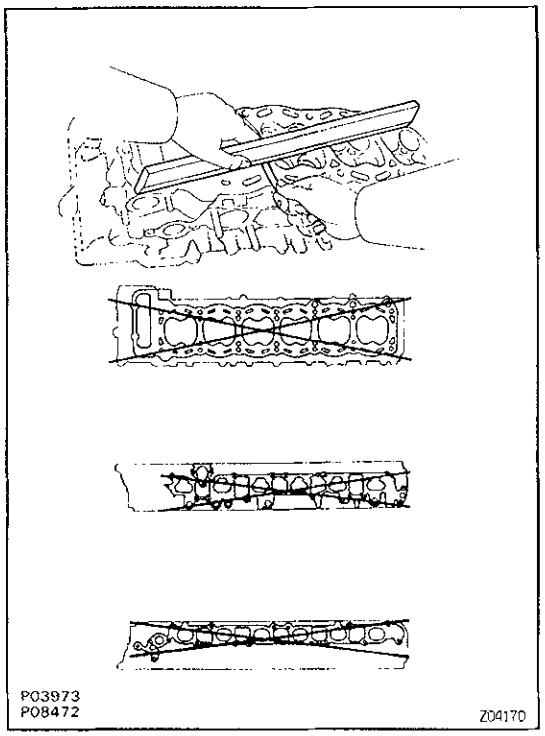

3. INSPECT CYLINDER HEAD

A. Inspect for flatness

Using a precision straight edge and thickness gauge, measure the surfaces contacting the cylinder block and the manifolds for warpage.

Maximum warpage:

Cylinder block side

0.15 mm (0.0059 in.)

Manifold side

0.10 mm (0.0039 in.)

If warpage is greater than maximum, replace the cylinder head.

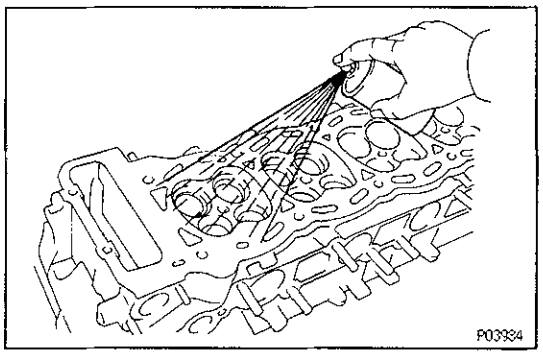

B. Inspect for cracks

Using a dye penetrant, check the combustion chambers, intake ports, exhaust ports and cylinder block surface for cracks.

If cracked, replace the cylinder head.

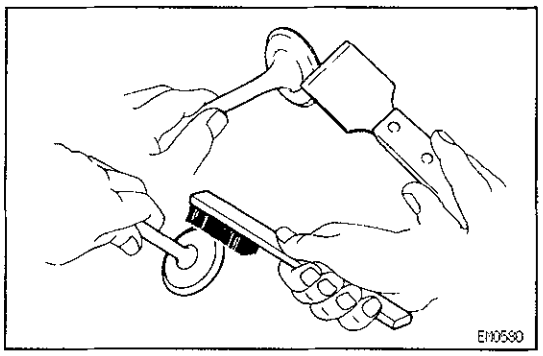

4. CLEAN VALVES

(a) Using a gasket scraper, chip off any carbon from the valve head.

(b) Using a wire brush, thoroughly clean the valve.

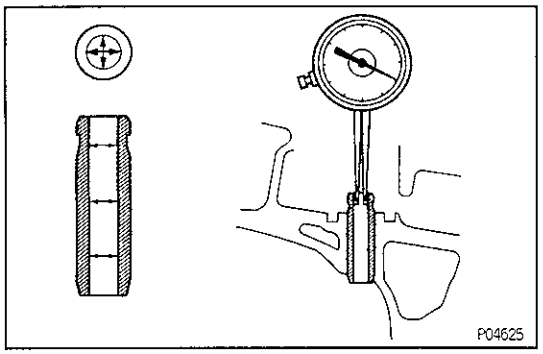

EG

5. INSPECT VALVE STEMS AND GUIDE BUSHINGS

(a) Using a caliper gauge, measure the inside diameter of the guide bushing.

Bushing inside diameter:

7.010 — 7.030 mm (0.2760 — 0.2768 in.)

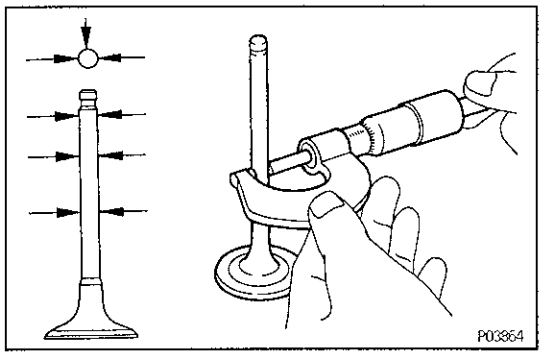

(b) Using a micrometer, measure the diameter of the valve stem.

Valve stem diameter:

Intake

6.970 — 6.985 mm (0.2744 — 0.2750 in.)

Exhaust

6.965 — 6.980 mm (0.2742 — 0.2748 in.)

(c) Subtract the valve stem diameter measurement from the guide bushing inside diameter measurement.

Standard oil clearance:

Intake

0.025 — 0.060 mm (0.0010 — 0.0024 in.)

Exhaust

0.030 — 0.065 mm (0.0012 — 0.0026 in.)

Maximum oil clearance:

Intake

0.08 mm (0.0031 in.)

Exhaust

0.10 mm (0.0039 in.)

If the clearance is greater than maximum, replace the valve and guide bushing.

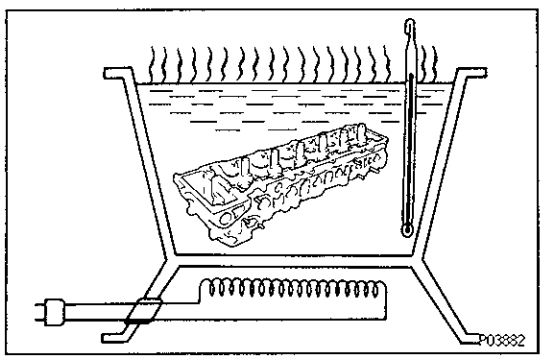

6. IF NECESSARY, REPLACE VALVE GUIDE BUSHINGS

(a) Gradually heat the cylinder head to 80 — 100°C (176 — 212°F).

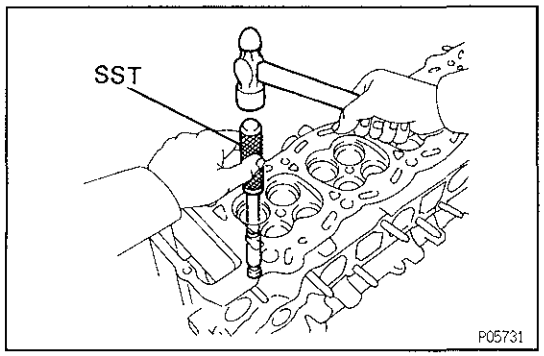

(b) Using SST and a hammer, tap out the guide bushing.
SST 09201 – 15010

EG

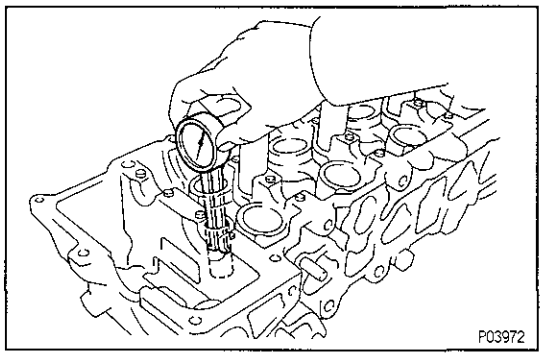

(c) Using a caliper gauge, measure the bushing bore diameter of the cylinder head.

Both intake and exhaust

Bushing bore diameter mm (in.)	Bushing size
11.492 – 11.513 (0.4524 – 0.4533)	Use STD
11.542 – 11.563 (0.4544 – 0.4552)	Use O/S 0.05

V00741

(d) Select a new guide bushing (STD size or O/S 0.05).
If the bushing bore diameter of the cylinder head is greater than 11.513 mm (0.4533 in.), machine the bushing bore to the following dimension:
11.542 – 11.563 mm (0.4544 – 0.4552 in.)
If the bushing bore diameter of the cylinder head is greater than 11.563 mm (0.4552 in.), replace the cylinder head.

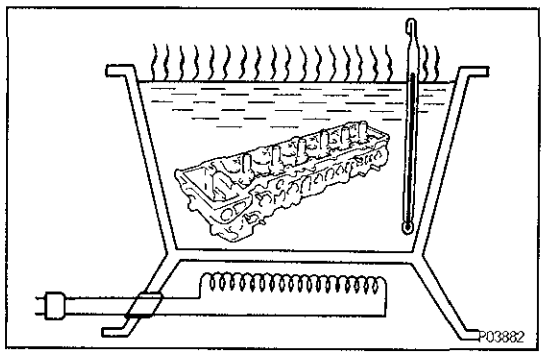

(e) Gradually heat the cylinder head to 80 – 100°C (176 – 212°F).

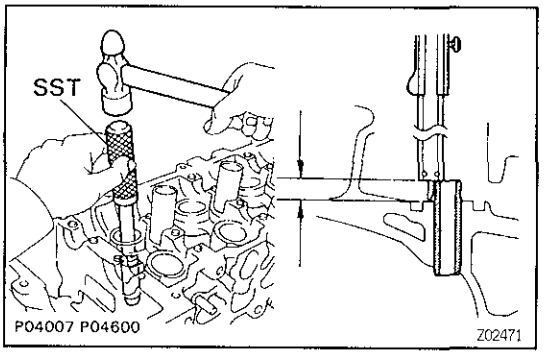

(f) Using SST and a hammer, tap in a new guide bushing to where there 8.2 – 8.6 mm (0.323 – 0.339 in.) protruding from the cylinder head.
SST 09201 – 15010

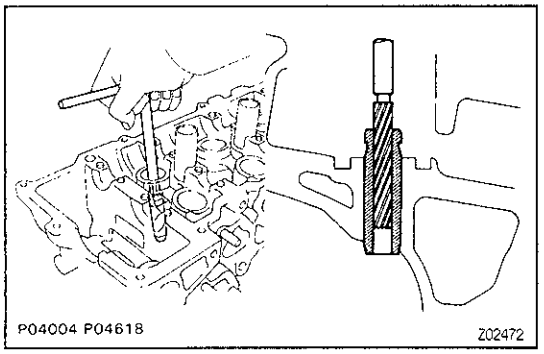

(g) Using a sharp 7 mm reamer, ream the guide bushing to obtain the standard specified clearance (See page EG–58) between the guide bushing and valve stem.

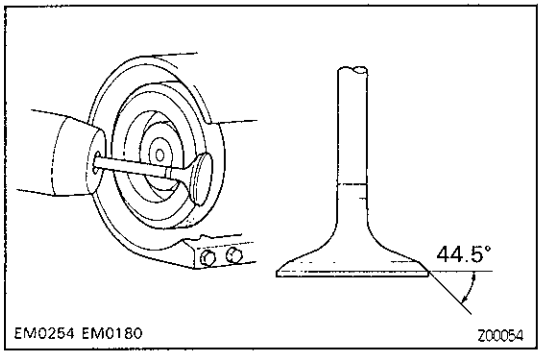

7. INSPECT AND GRIND VALVES

(a) Grind the valve enough to remove pits and carbon.

(b) Check that the valve is ground to the correct valve face angle.

Valve face angle:

44.5°

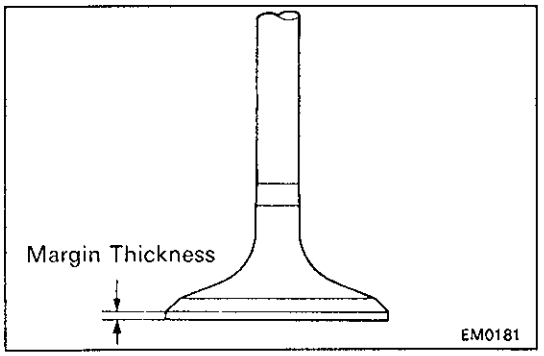

(c) Check the valve head margin thickness.

Standard margin thickness:

1.2 mm (0.047 in.)

Minimum margin thickness:

1.0 mm (0.039 in.)

If the margin thickness is less than minimum, replace the valve.

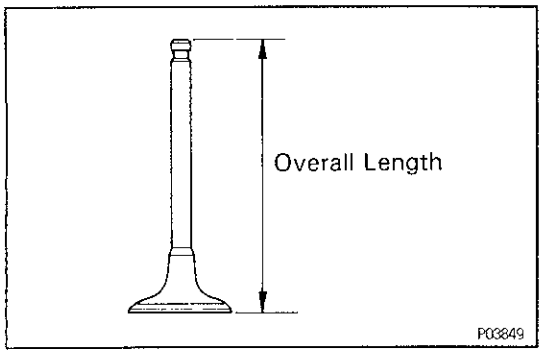

(d) Check the valve overall length.

Standard overall length:

Intake

98.4 mm (3.874 in.)

Exhaust

97.9 mm (3.854 in.)

Minimum overall length:

Intake

97.9 mm (3.854 in.)

Exhaust

97.4 mm (3.835 in.)

If the overall length is less than minimum, replace the valve.

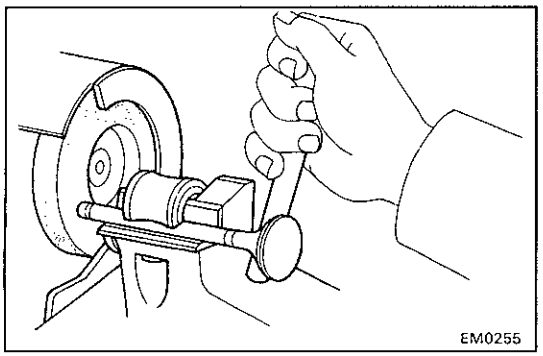

(e) Check the surface of the valve stem tip for wear.
If the valve stem tip is worn, resurface the tip with a grinder or replace the valve.
NOTICE: Do not grind off more than minimum.

EG

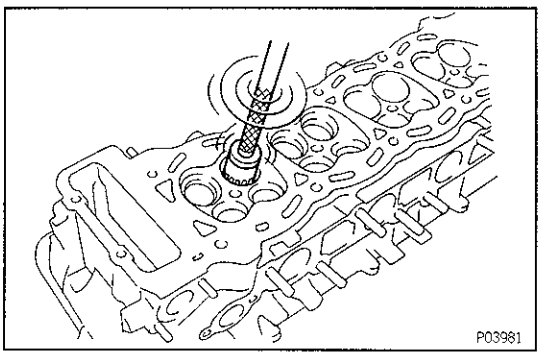

8. INSPECT AND CLEAN VALVE SEATS

(a) Using a 45° carbide cutter, resurface the valve seats. Remove only enough metal to clean the seats.

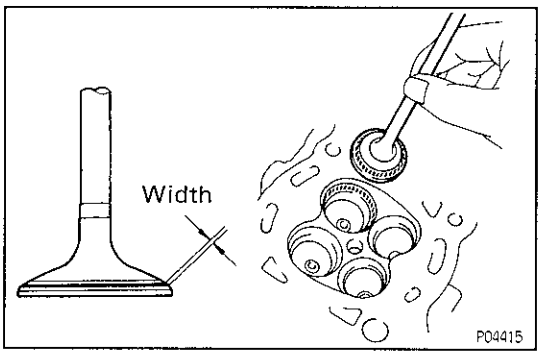

(b) Check the valve seating position.
Apply a light coat of prussian blue (or white lead) to the valve face. Lightly press the valve against the seat. Do not rotate valve.

(c) Check the valve face and seat for the following:

- If blue appears 360° around the face, the valve is concentric. If not, replace the valve.

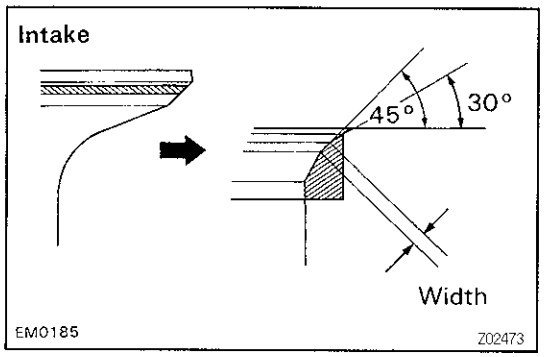

- If blue appears 360° around the valve seat, the guide and face are concentric. If not, resurface the seat.
- Check that the seat contact is in the middle of the valve face with the following width:

Intake

1.2 – 1.6 mm (0.047 – 0.063 in.)

Exhaust

1.0 – 1.4 mm (0.039 – 0.055 in.)

If not, correct the valve seats as follows:

(1) (Intake)
If the seating is too high on the valve face, use 30° and 45° cutters to correct the seat.

(2) If the seating is too low on the valve face, use 75° and 45° cutters to correct the seat.

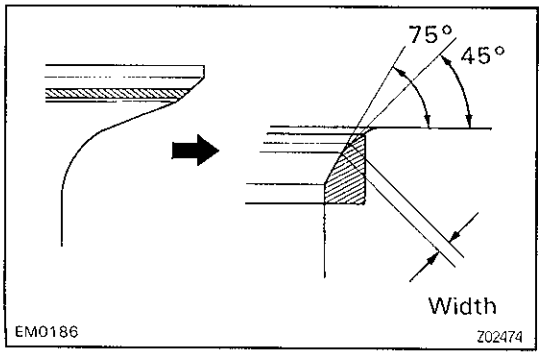

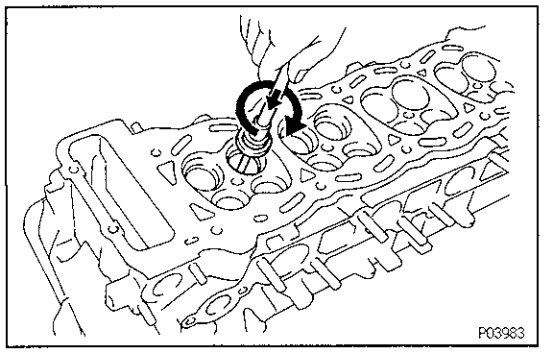

(d) Hand—lap the valve and valve seat with an abrasive compound.
(e) After hand—lapping, clean the valve and valve seat.

EG

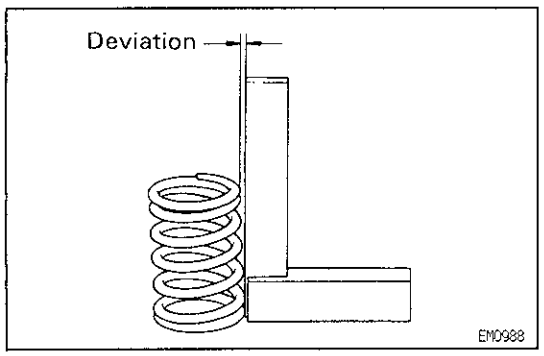

9. INSPECT VALVE SPRINGS

(a) Using a steel square, measure the squareness of the valve spring.
Maximum squareness:
2.0 mm (0.079 in.)
If the deviation is greater than maximum, replace the valve spring.

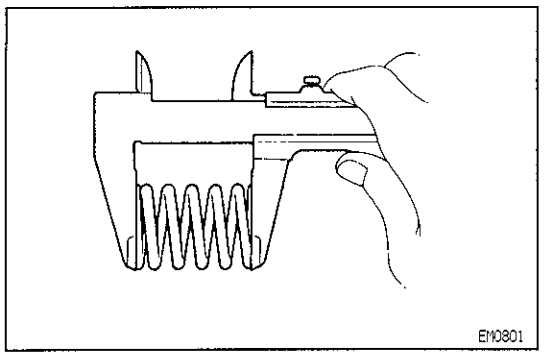

(b) Using a vernier caliper, measure the free length of the valve spring.
Free length:
43.94 — 45.06 mm (1.7299 — 1.7740 in.)
If the free length is not as specified, replace the valve spring.

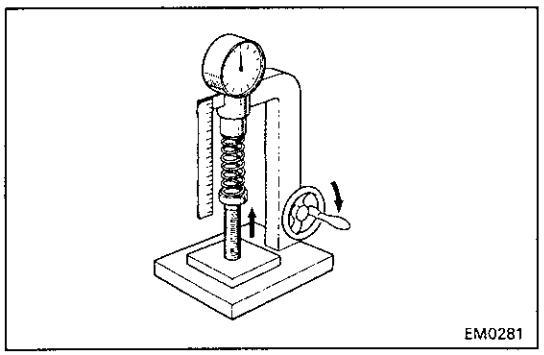

(c) Using a spring tester, measure the tension of the valve spring at the specified installed length.
Installed tension:
214 — 238 N (21.8 — 24.2 kgf, 48.1 — 53.4 lbf)
at 36.5 mm (1.437 in.)
If the installed tension is not as specified, replace the valve spring.

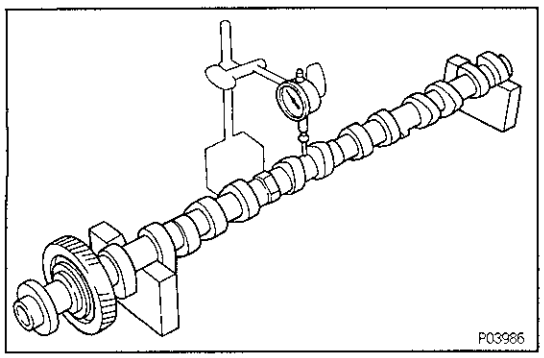

10. INSPECT CAMSHAFTS AND BEARINGS

A. Inspect camshaft for runout

(a) Place the camshaft on V—blocks.
(b) Using a dial indicator, measure the circle runout at the center journal.
Maximum circle runout:
0.06 mm (0.0024 in.)
If the circle runout is greater than maximum, replace the camshaft.

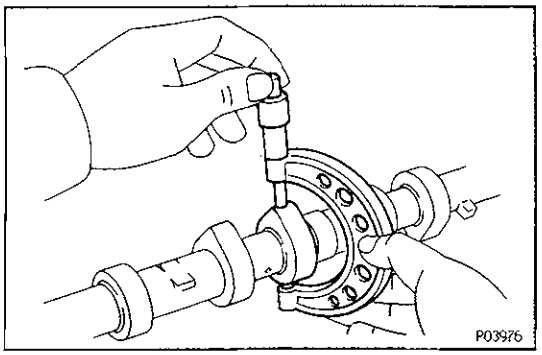

B. Inspect cam lobes

Using a micrometer, measure the cam lobe height.

Standard cam lobe height:

50.61 – 50.71 mm (1.9925 – 1.9965 in.)

Minimum cam lobe height:

50.51 mm (1.9886 in.)

If the cam lobe height is less than minimum, replace the camshaft.

EG

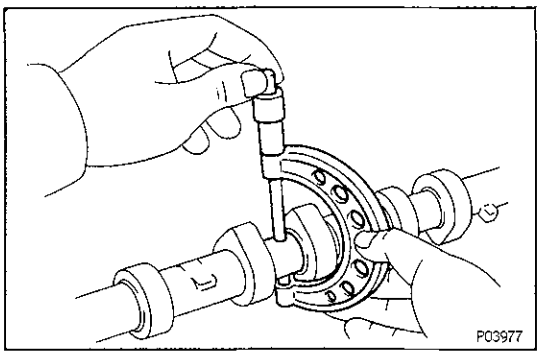

C. Inspect camshaft journals

Using a micrometer, measure the journal diameter.

Journal diameter:

26.959 – 26.975 mm(1.0614 – 1.0620 in.)

If the journal diameter is not as specified, check the oil clearance.

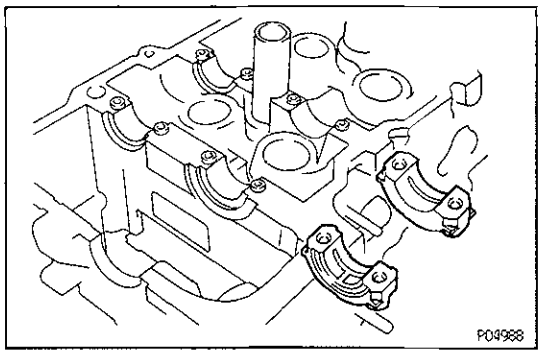

D. Inspect camshaft bearings

Check that bearings for flaking and scoring.

If the bearings are damaged, replace the bearing caps and cylinder head as a set.

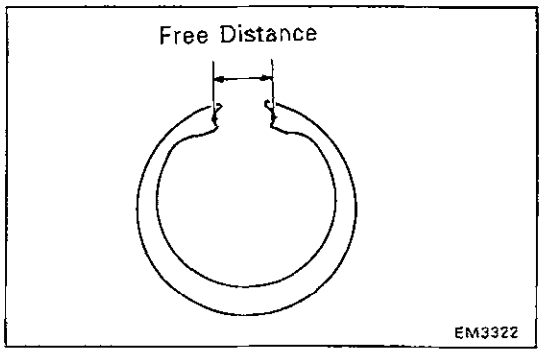

E. Inspect camshaft gear spring

Using a vernier caliper, measure the free distance between the spring ends.

Free distance:

18.2 – 18.8 mm (0.717 – 0.740 in.)

If the free distance is not as specified, replace the gear spring.

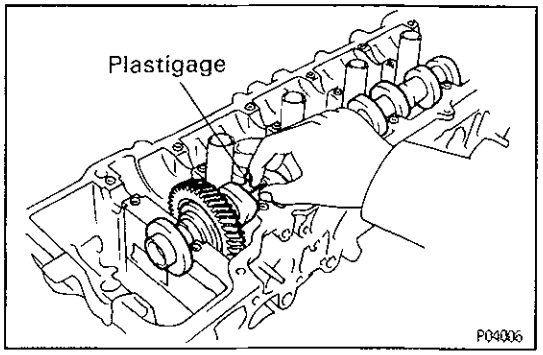

F. Inspect camshaft journal oil clearance

(a) Clean the bearing caps and camshaft journals.

(b) Place the camshafts on the cylinder head.

(c) Lay a strip of Plastigage across each of the camshaft journals.

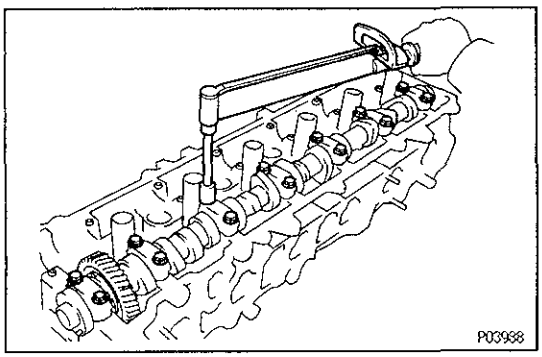

(d) Install the bearing caps.
(See step 7 on pages EG–73 to 74)
Torque: 16 N·m (160 kgf·cm, 12 ft·lbf)
NOTICE: Do not turn the camshaft.

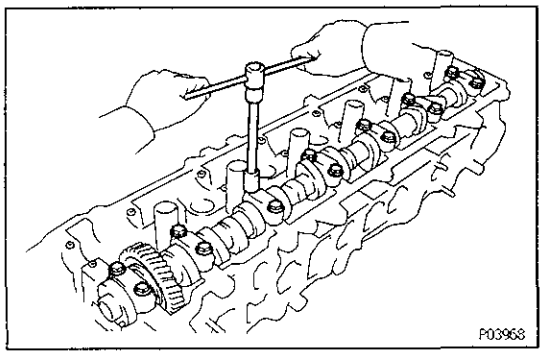

(e) Remove the bearing caps.

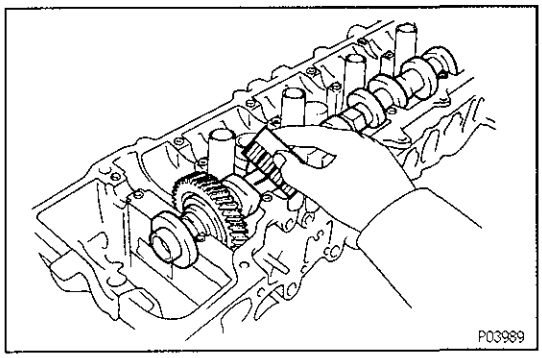

(f) Measure the Plastigage at its widest point.
Standard oil clearance:
0.025 – 0.062 mm (0.0010 – 0.0024 in.)
Maximum oil clearance:
0.10 mm (0.0039 in.)
If the oil clearance is greater than maximum, replace the camshaft. If necessary, replace the bearing caps and cylinder head as a set.

(g) Completely remove the Plastigage.

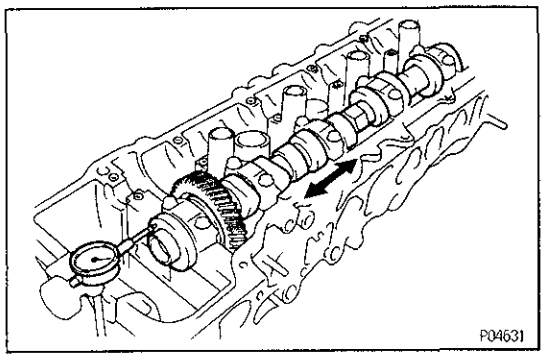

G. Inspect camshaft thrust clearance

(a) Install the camshaft.
(See step 7 on pages EG–73 to 74)

(b) Using a dial indicator, measure the thrust clearance while moving the camshaft back and forth.
Standard thrust clearance:
0.030 – 0.080 mm (0.0012 – 0.0031 in.)
Maximum thrust clearance:
0.10 mm (0.0039 in.)
If the thrust clearance is greater than maximum, replace the camshaft. If necessary, replace the bearing caps and cylinder head as a set.

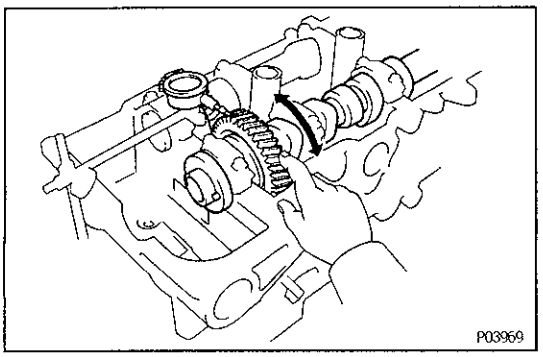

H. Inspect camshaft gear backlash

(a) Install the camshafts without installing the exhaust cam sub–gear.
(See step 7 on pages EG–73 to 74)

(b) Using a dial indicator, measure the backlash.
Standard backlash:
0.020 – 0.200 mm (0.0008 – 0.0079 in.)
Maximum backlash:
0.30 mm (0.0188 in.)
If the backlash is greater than maximum, replace the camshafts.

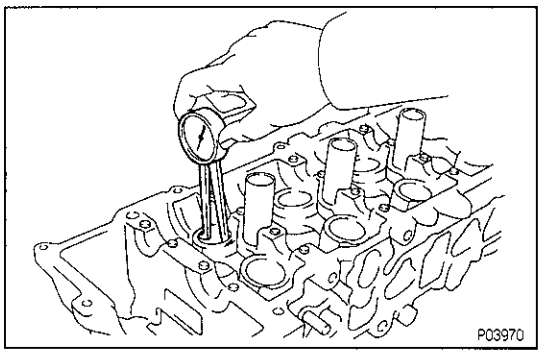

11. INSPECT VALVE LIFTERS AND LIFTER BORES

(a) Using a caliper gauge, measure the lifter bore diameter of the cylinder head.
Lifter bore diameter:
34.000 – 34.021 mm (1.3386 – 1.3394 in.)

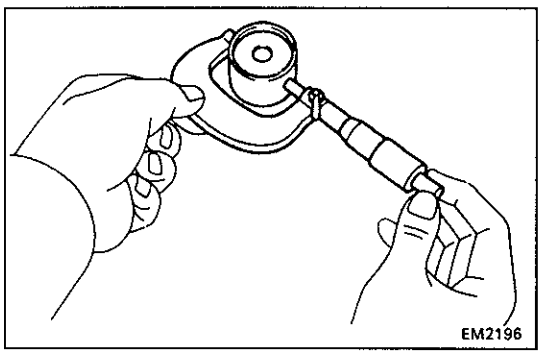

(b) Using a micrometer, measure the lifter diameter.
Lifter diameter:
33.966 – 33.976 mm (1.3372 – 1.3376 in.)

(c) Subtract the lifter diameter measurement from the lifter bore diameter measurement.
Standard oil clearance:
0.024 – 0.055 mm (0.0009 – 0.0022 in.)
Maximum oil clearance:
0.07 mm (0.0028 in.)
If the oil clearance is greater than maximum, replace the lifter. If necessary, replace the cylinder head.

EG

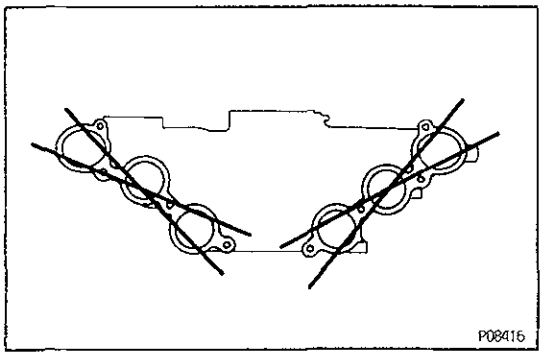

12. INSPECT AIR INTAKE CHAMBER

Using a precision straight edge and thickness gauge, measure the surface contacting the intake manifold for warpage.

Maximum warpage:

0.30 mm (0.0118 in.)

If warpage is greater than maximum, replace the air intake chamber.

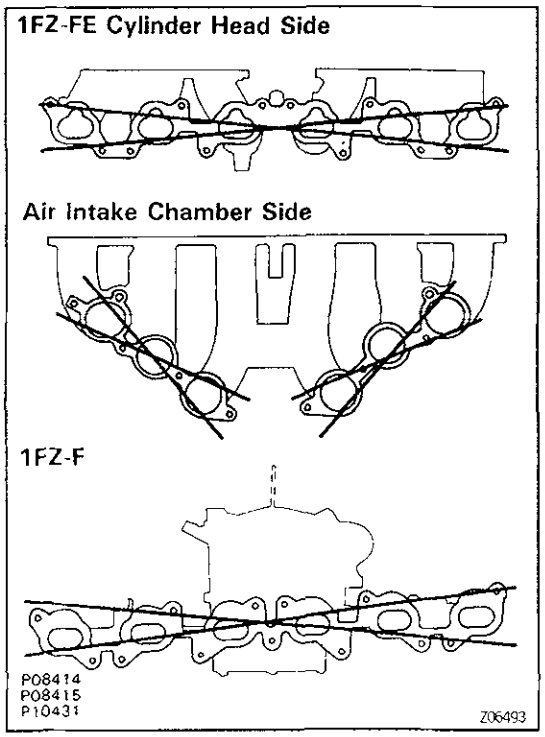

13. INSPECT INTAKE MANIFOLD

Using a precision straight edge and thickness gauge, measure the surface contacting the cylinder head and air intake chamber for warpage.

Maximum warpage:

0.30 mm (0.0118 in.)

If warpage is greater than maximum, replace the manifold.

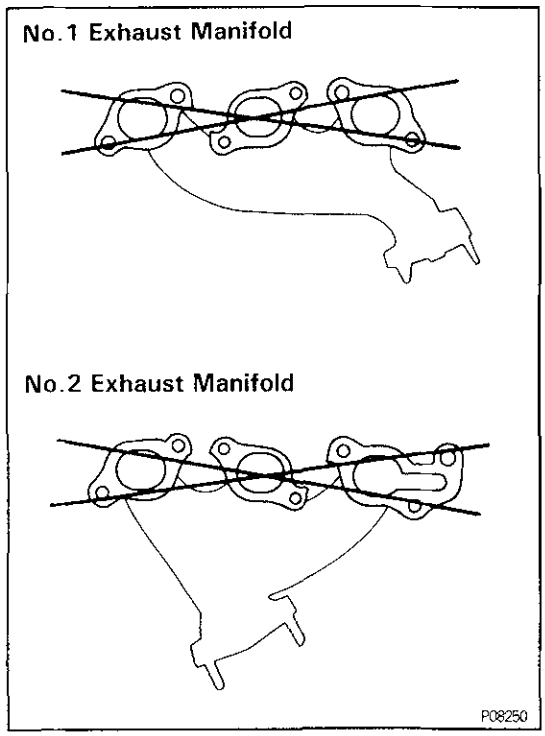

14. INSPECT EXHAUST MANIFOLDS

Using a precision straight edge and thickness gauge, measure the surface contacting the cylinder head for warpage.

Maximum warpage:

0.30 mm (0.0118 in.)

If warpage is greater than maximum, replace the manifold.

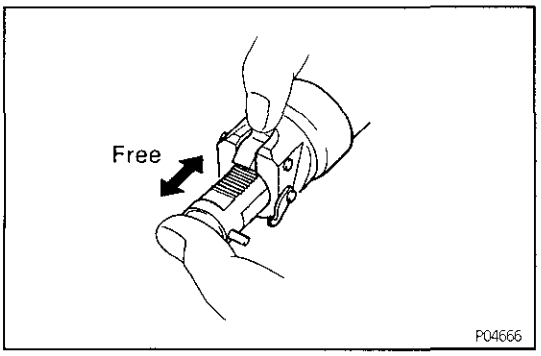

15. INSPECT CHAIN TENSIONER

(a) Check that the plunger moves smoothly when the ratchet pawl is raised with your finger.

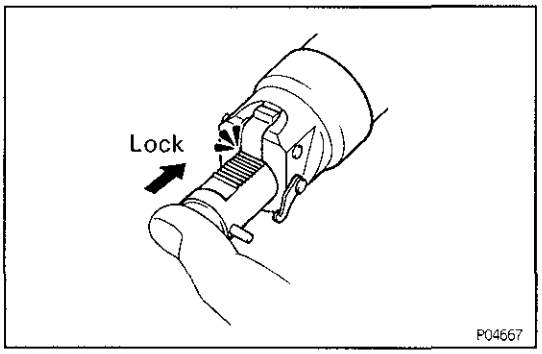

(b) Released the ratchet pawl and check that the plungeris locked in place by the ratchet pawl and does not move when pushed with your finger.

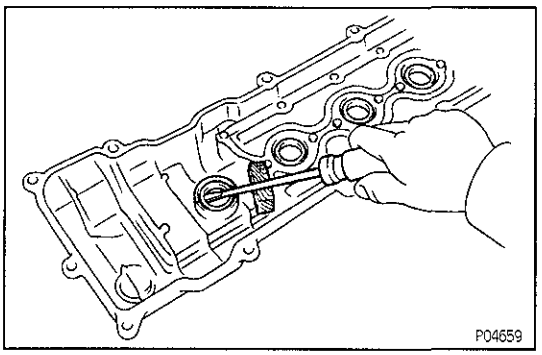

16. IF NECESSARY, REPLACE SPARK PLUG TUBE GASKETS

(a) Using a screwdriver, pry off the tube gasket.

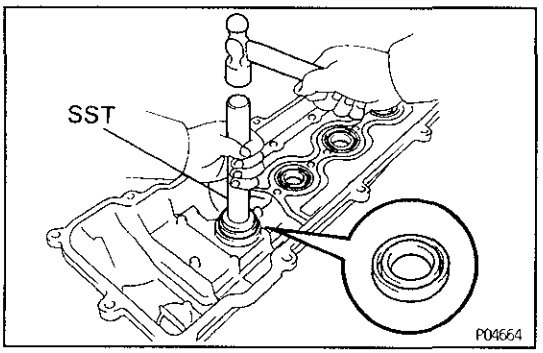

(b) Using SST and a hammer, tap in a new tube gasket as shown in the illustration.
SST 09608–60012 (09608–04020, 09608–04060)

(c) Apply a light coat of MP grease to the gasket lip.

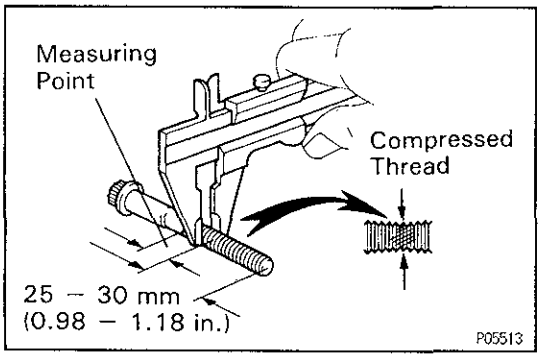

17. INSPECT CYLINDER HEAD BOLTS

Using vernier calipers, measure the thread outside diameter of the bolt.

Standard outside diameter:

10.85 – 11.00 mm (0.4272 – 0.4331 in.)

Minimum outside diameter:

10.6 mm (0.417 in.)

If the diameter is less than minimum, replace the bolt.

EG0VE-03

CYLINDER HEAD ASSEMBLY

(See Components for Removal and Installation)

HINT:

- Thoroughly clean all parts to be assembled.
- Before installing the parts, apply new engine oil to all sliding and rotating surfaces.
- Replace all gaskets and oil seals with new ones.

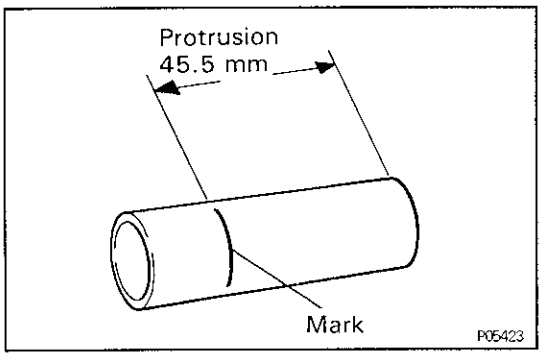

1. INSTALL SPARK PLUG TUBES

HINT: When using a new cylinder head, spark plug tubes must be installed.

(a) Mark the standard position away from the edge, onto the spark plug tube.

Standard protrusion:

45.5 mm (1.791 in.)

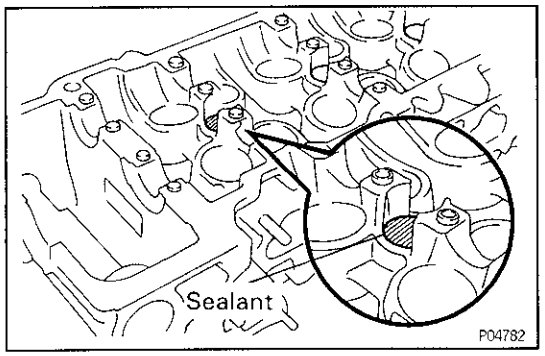

(b) Apply adhesive to the spark plug tube hole of the cylinder head.

Sealant:

Part No. 08833 – 00070, Adhesive 1324, THREE BOND 1324 or equivalent

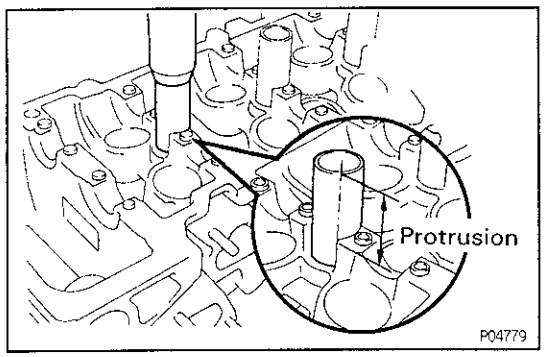

(c) Using a press, press in a new spark plug tube until there is 45.5 mm (1.791 in.) protruding from the camshaft bearing cap installation surface of the cylinder head.

NOTICE: Avoid pressing a new spark plug tube in too far by measuring the amount of protrusion while pressing.

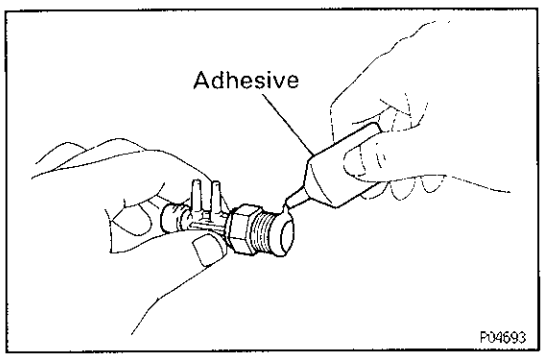

2. INSTALL FOLLOWING PARTS:

HINT: Apply adhesive to two or three threads of the TVV.

Adhesive:

Part No.08833–00080, THREE BOND 1344, LOCTITE 242 or equivalent

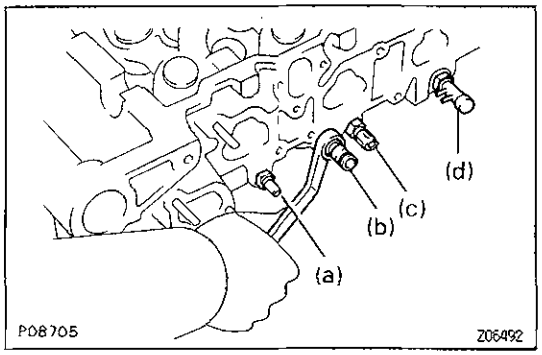

(a) Water temperature sender gauge
(b) Water temperature cut switch
(c) Water temperature sensor
(d) BVSV

EG

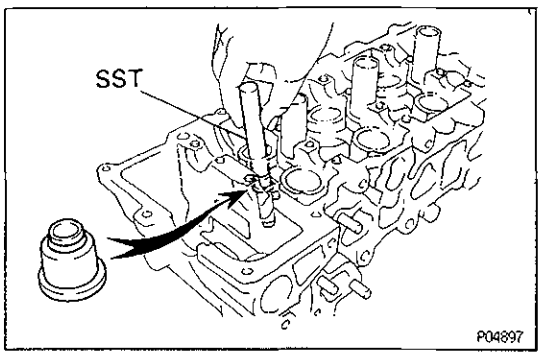

3. INSTALL VALVES

(a) Using SST, push in a new oil seal.
SST 09236–00101 (09236–15010)

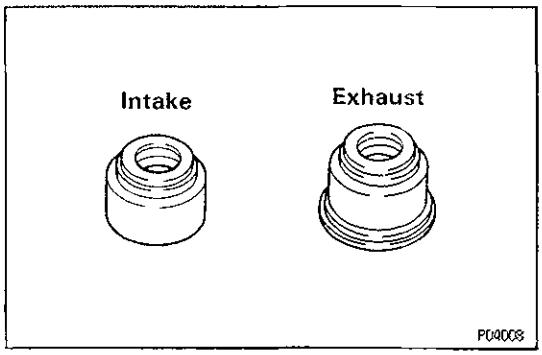

HINT: Different oil seals are used for the intake and exhaust.

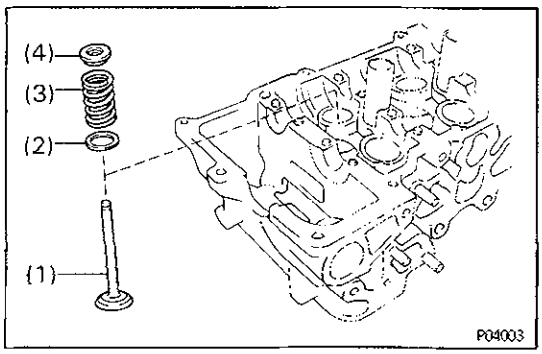

(b) Install the following parts:
(1) Valve
(2) Spring seat
(3) Valve spring
(4) Spring retainer

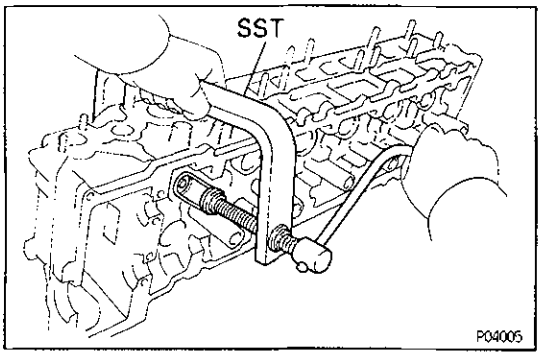

(c) Using SST, compress the valve spring and place the two keepers around the valve stem.
SST 09202–70010

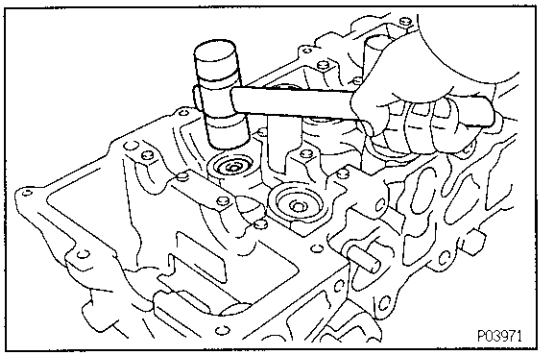

(d) Using a plastic–faced hammer, lightly tap the valve stem tip to assure proper fit.

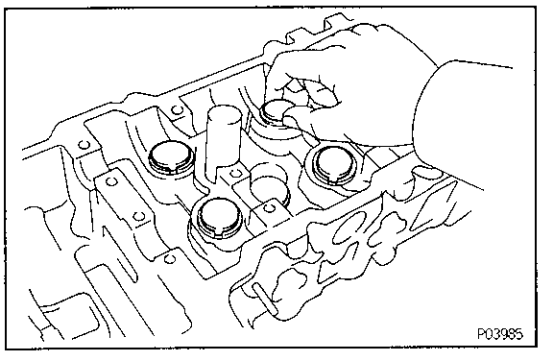

4. INSTALL VALVE LIFTERS AND SHIMS

(a) Install the valve lifter and shim.

(b) Check that the valve lifter rotates smoothly by hand.

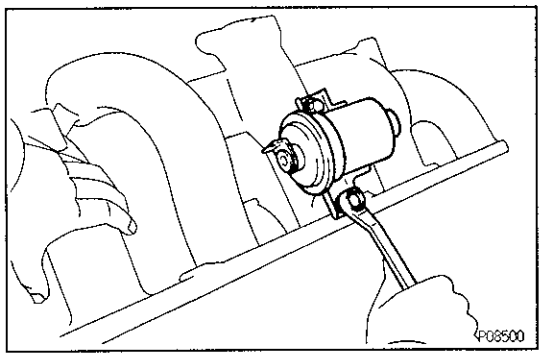

EG27K–01

CYLINDER HEAD INSTALLATION

(See Components for Removal and Installation)

1. INSTALL FUEL FILTER TO INTAKE MANIFOLD

Install the fuel filter with the two bolts.

Torque: 21 N·m (210 kgf·cm, 15 ft·lbf)

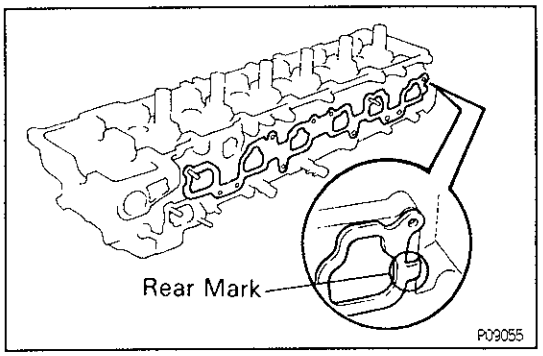

2. INSTALL INTAKE MANIFOLD

(a) Place a new gasket so that the rear mark is toward the rear side.

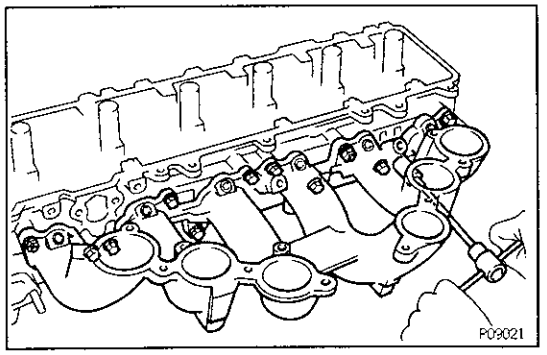

(b) Install the intake manifold with the six bolts and two nuts.

Torque: 21 N·m (210 kgf·cm, 15 ft·lbf)

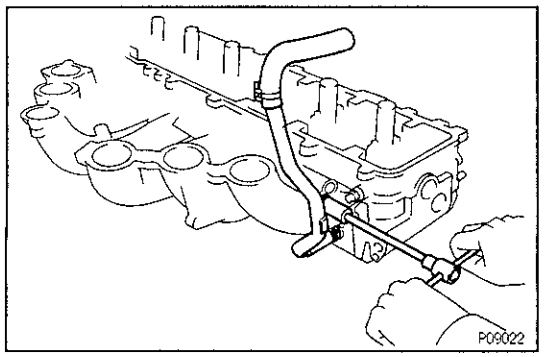

3. INSTALL HEATER INLET PIPE AND HOSE

Install the heater hose to the cylinder head, and connect the pipe to the intake manifold.

Torque: 21 N·m (210 kgf·cm, 15 ft·lbf)

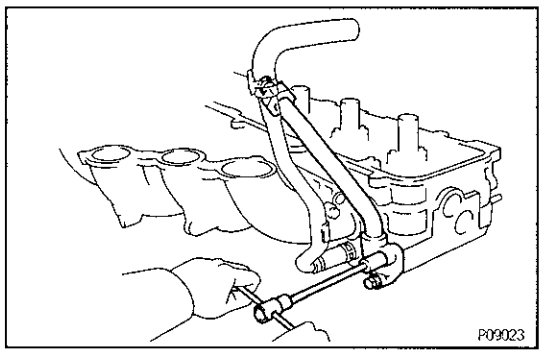

4. (Europe)
INSTALL EGR PIPE

Install a new gasket and the EGR pipe with the two bolts.

Torque: 21 N·m (210 kgf·cm, 15 ft·lbf)

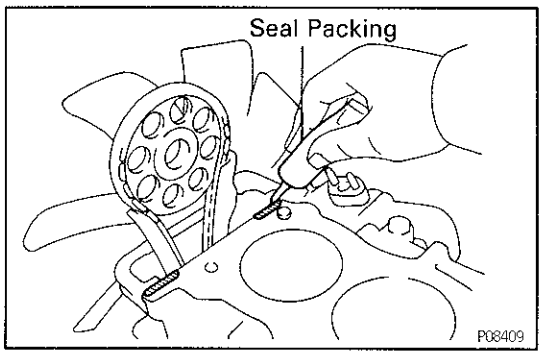

5. INSTALL CYLINDER HEAD

A. Place cylinder head on cylinder block

(a) Apply seal packing to two locations as shown.

Seal packing:

Part No.08826—00080 or equivalent

NOTICE: Do not apply too much seal packing

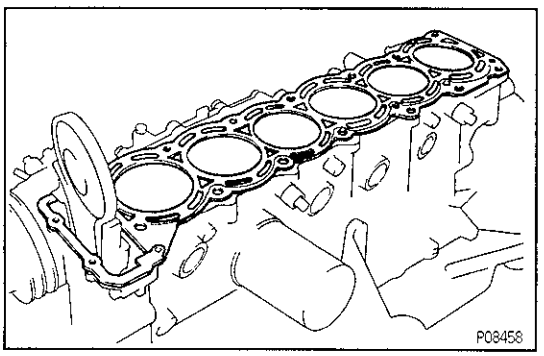

(b) Place a new cylinder head gasket in position on the cylinder block.

NOTICE: Be careful of the installation direction.

(c) Place the cylinder head in position on the cylinder head gasket.

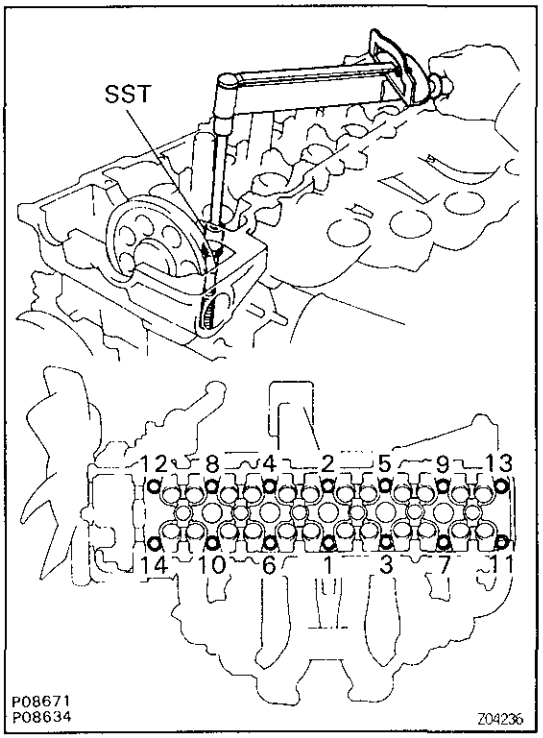

B. Install cylinder head bolts

HINT:

- The cylinder head bolts are tightened in two progressive steps (steps (b) and (d)).
- If any cylinder head bolt is broken or deformed, replace it.

(a) Apply a light coat of engine oil on the threads and under the heads of the cylinder head bolts.

(b) Using SST, install and uniformly tighten the 14 cylinder head bolts and plate washers in several passes, in the sequence shown.

SST 09011–38121

Torque: 39 N·m (400 kgf·cm, 29 ft·lbf)

If any one of the cylinder head bolts does not meet the torque specification, replace the cylinder head bolt.

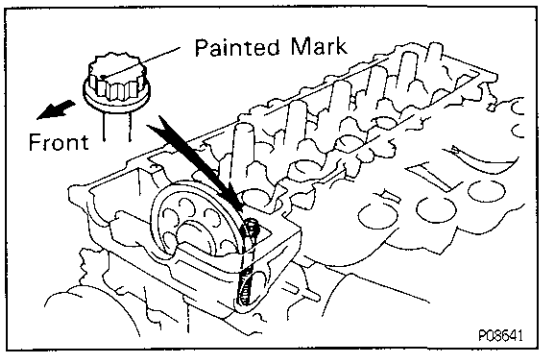

(c) Mark the front of the cylinder head bolt head with paint.

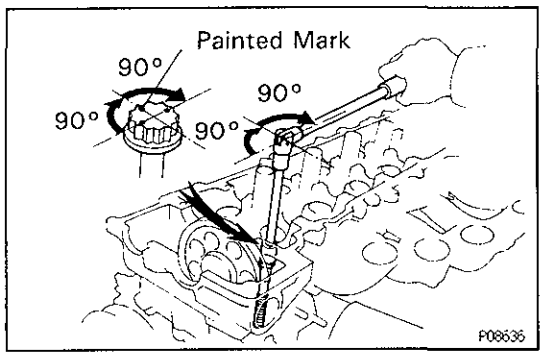

(d) Retighten the cylinder head bolts 90° in the numerical order shown.

(e) Retighten the cylinder head bolts by an additional 90°.

(f) Check that the painted mark is now facing rearward.

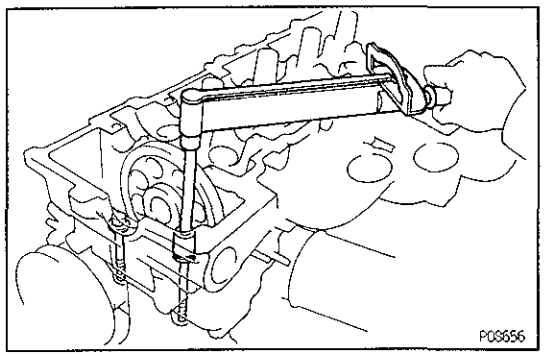

(g) Install and torque the two mounting bolts.

Torque: 21N·m (210kgf·cm, 15ft·lbf)

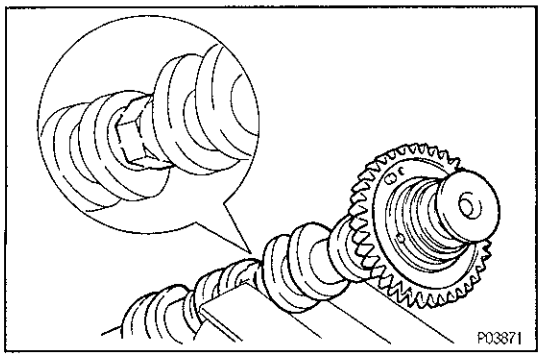

6. ASSEMBLY EXHAUST CAMSHAFT

(a) Mount the hexagon wrench head portion of the camshaft in a vise.

NOTICE: Be careful not to damage the camshaft.

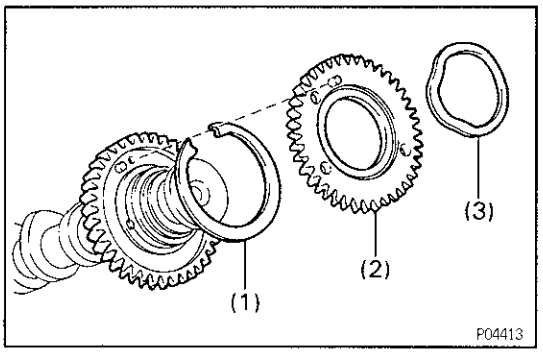

(b) Install the following parts:
(1) Camshaft gear spring
(2) Camshaft sub—gear
(3) Wave washer

HINT: Align the pins on the gears with the spring ends.

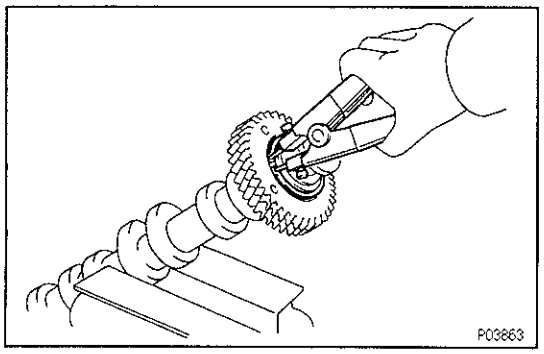

(c) Using snap ring pliers, install the snap ring.

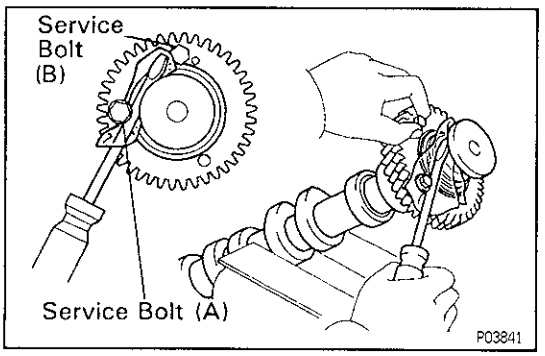

(d) Insert a service bolt (A) into the service hole of the camshaft sub—gear.

(e) Using a screwdriver, align the holes of the camshaft main gear and sub—gear by turning camshaft sub—gear clockwise, and install a service bolt (B).

NOTICE: Be careful not to damage the camshaft.

7. INSTALL CAMSHAFTS

NOTICE: Since the thrust clearance of the camshaft is small, the camshaft must be kept level while it is being installed. If the camshaft is not kept level, the portion of the cylinder head receiving the shaft thrust may crack or be damaged, causing the camshaft to seize or break. To avoid this, the following steps should be carried out.

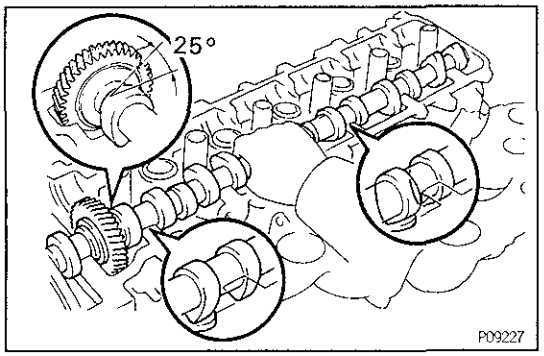

A. Install intake camshaft

(a) Apply engine oil to the thrust portion of the intake camshaft.

(b) Lightly place the intake camshaft on top of the cylinder head as shown in the illustration so that the No. 1 and No.4 cylinder cam lobes face downward.

(c) Lightly push the camshaft towards the front without applying excessive force.

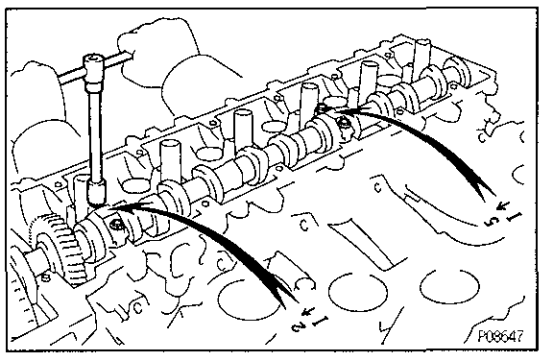

(d) Place the No.2 and No.5 bearing caps in their proper location.

(e) Temporarily tighten these bearing cap bolts uniformly and alternately in several passes until the bearing caps are snug with the cylinder head.

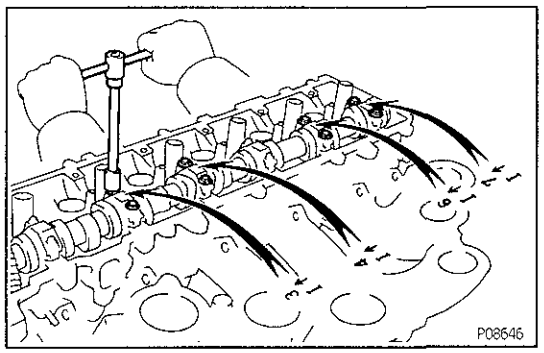

(f) Place the No.3, No.4, No.6 and No.7 bearing caps in their proper location.

(g) Temporarily tighten these bearing cap bolts, alternately tightening the left and right bolts uniformly.

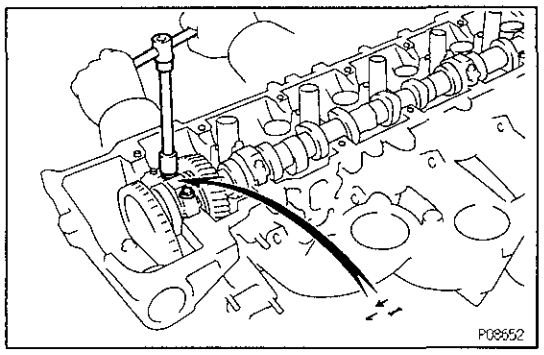

(h) Place the No.1 bearing cap in its proper location. When doing this, check that there is no gap between the cylinder head and the contact surface of bearing cap.

(i) Temporarily tighten the bearing cap bolts, alternately tightening the left and right bolts uniformly.

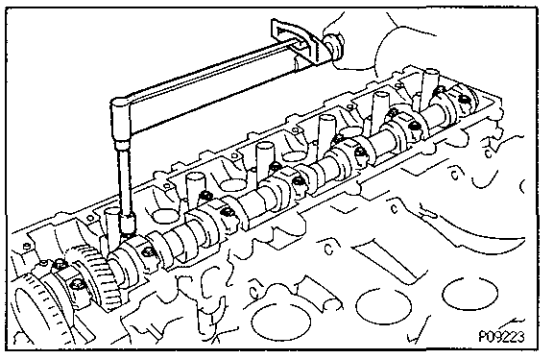

(j) Uniformly tighten the fourteen bearing cap bolts in several passes.

Torque: 16 N·m (160 kgf·cm, 12 ft·lbf)

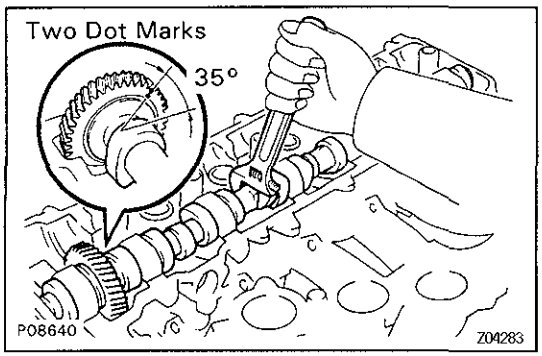

B. Install exhaust camshaft

(a) Set the timing mark (two dot marks) of the camshaft drive gear at approx. 35° angle by turning the hexagon wrench head portion of the intake camshaft with a wrench.

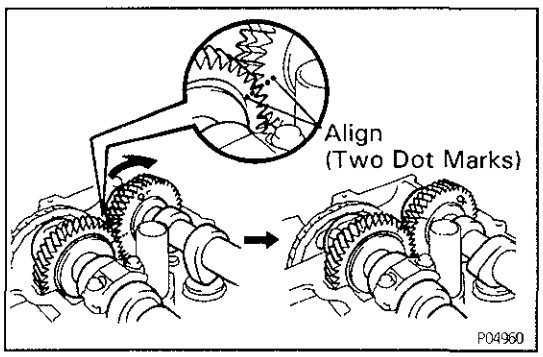

(b) Apply engine oil to thrust portion of the exhaust camshaft.

(c) Engage the exhaust camshaft gear to the intake camshaft gear by matching the timing marks (two dot marks) on each gear.

(d) Roll down the exhaust camshaft onto the bearing journals while engaging gears with each other.

(e) *Lightly push the intake camshaft towards the front* without applying excessive force.

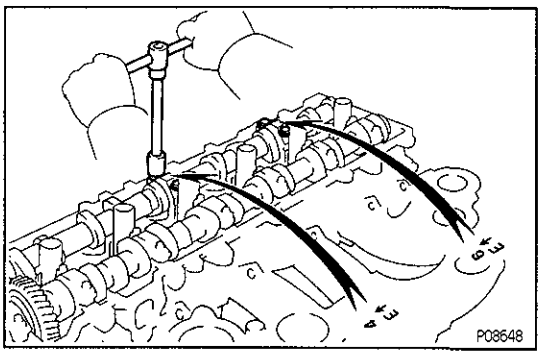

(f) Install the No.4 and No.6 bearing caps in their proper location.

(g) Temporarily tighten the bearing cap bolts uniformly and alternately in several passes until the bearing caps are snug with the cylinder head.

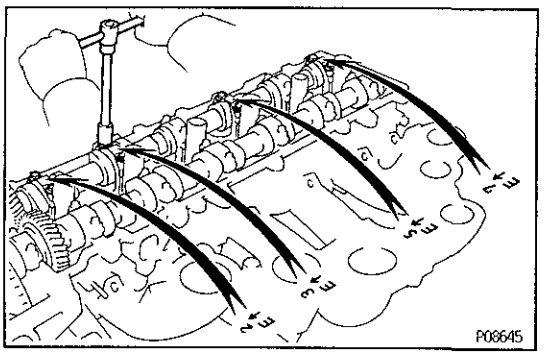

(h) Place the No.2, No.3, No.5 and No.7 bearing caps in their proper location.

(i) Temporarily tighten these bearing cap bolts, alternately tightening the left and right bolts uniformly.

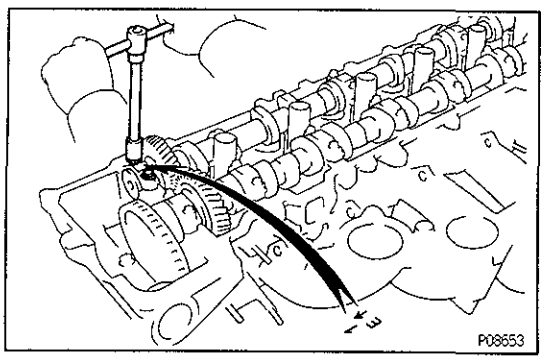

(j) Place the No.1 bearing cap in its proper location. When doing this, check that there is no gap between the cylinder head and the contact surface of bearing cap.

(k) Temporarily tighten the bearing cap bolts, alternately tightening the left and right bolts uniformly.

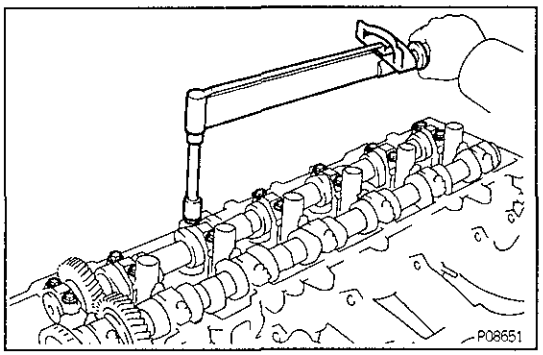

(l) Uniformly tighten the fourteen bearing cap bolts in several passes.
Torque: 16 N·m (160 kgf·cm, 12 ft·lbf)

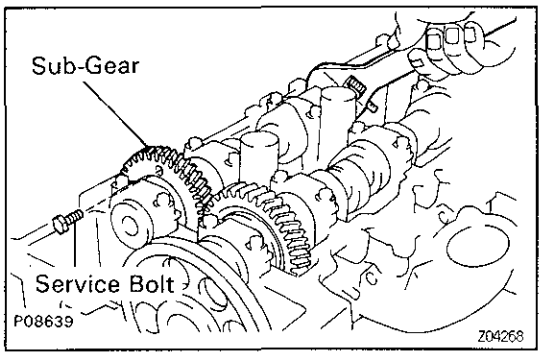

(m) Bring the service bolt installed in the driven sub–gear upward by turning the hexagon wrench head portion of the camshaft with a wrench.
(n) Remove the service bolt.
(o) Check that the intake and exhaust camshafts turn smoothly.

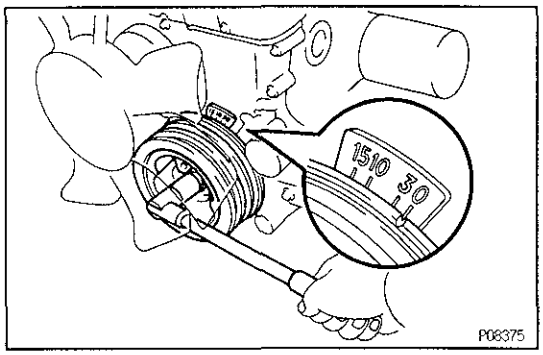

8. SET NO.1 CYLINDER TO TDC/COMPRESSION

(a) If necessaly turn the crankshaft pulley, and align its groove with the timing mark "0" of the timing chain cover.

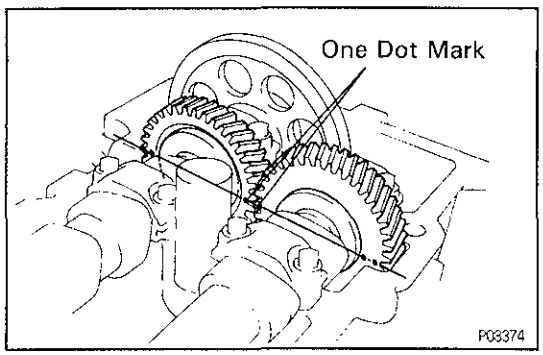

(b) Turn the camshafts so that the timing marks with one and two dots will be in straight line on the cylinder head surface as shown in the illustration.

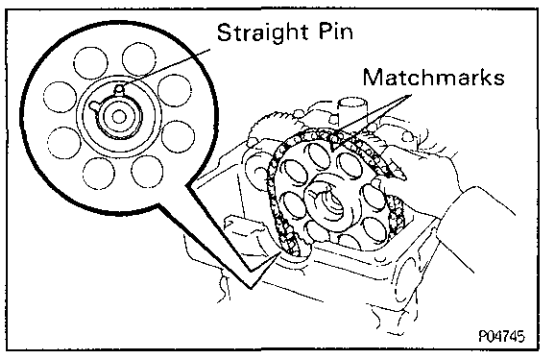

9. INSTALL CAMSHAFT TIMING GEAR

HINT: Check that the matchmarks on the camshaft timing gear and timing chain are aligned.

(a) Place the gear over the straight pin of the intake camshaft.

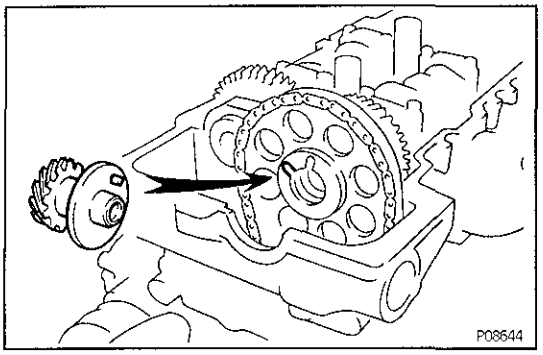

(b) Align the straight pin of distributor gear with the straight pin groove of the intake camshaft gear as shown.

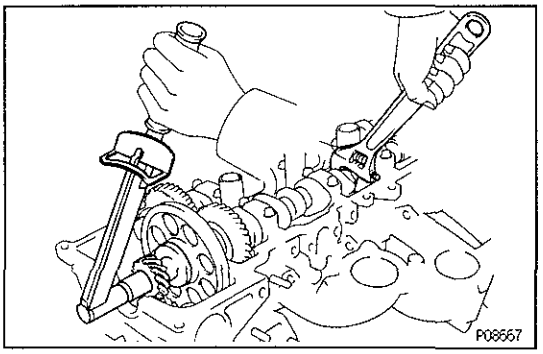

(c) Hold the intake camshaft with a wrench, install and torque the bolt.
Torque: 74 N·m (750 kgf·cm, 54 ft·lbf)

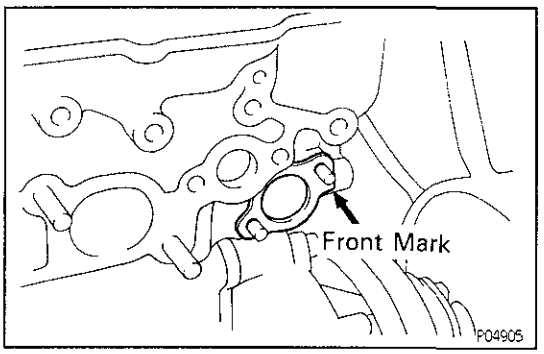

10. INSTALL CHAIN TENSIONER

(a) Place a new gasket so that the front mark is toward the front side.

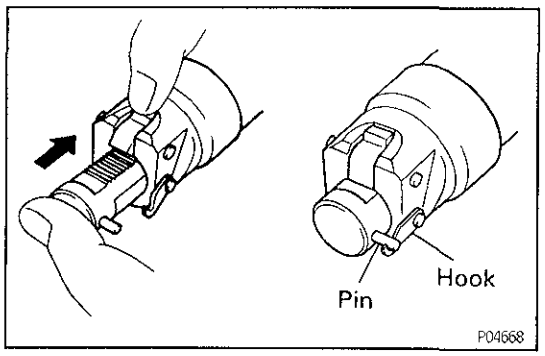

(b) Release the ratchet pawl, fully push in the plunger and apply the hook to the pin so that the plunger cannot spring out.

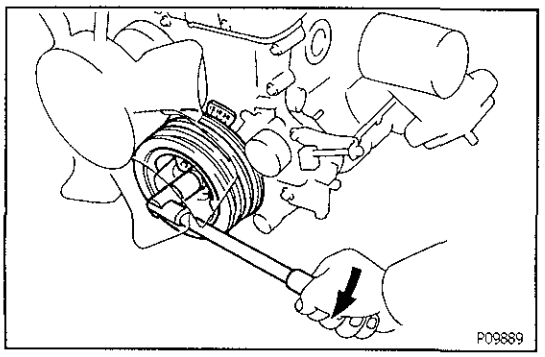

(c) Turn the crankshaft pulley clockwise to provide some slack for the chain on the tensioner side.
NOTICE: Do not turn the pulley counterclockwise.

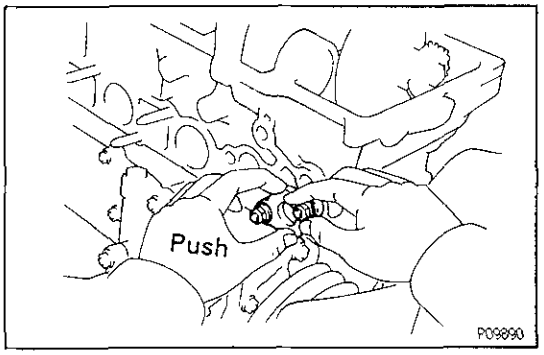

(d) Push the tensioner by hand until it touches the head installation surface, then install the two nuts.

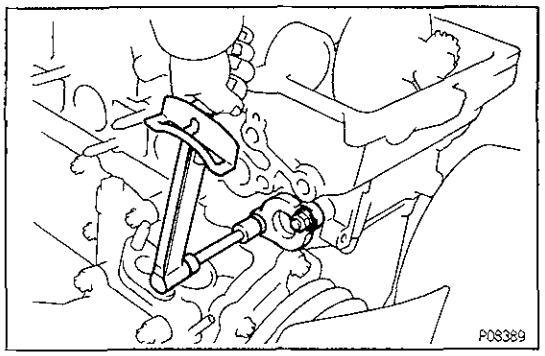

(e) Tighten the two nuts.
Torque: 21 N·m (210 kgf·cm, 15 ft·lbf)

(f) Check that the hook of the tensioner is not released.
NOTICE: If the plunger springs out during installation of the chain tensioner, repeat the operation in step (b) before installing the tensioner.

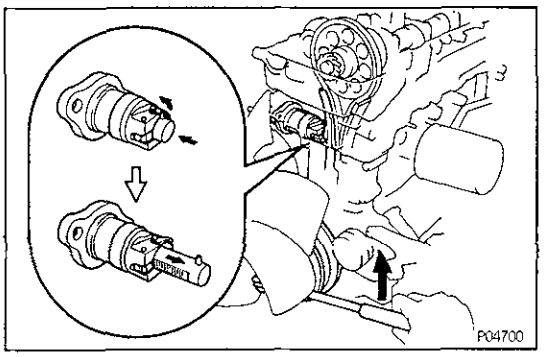

11. SET CHAIN TENSIONER

Turn the crankshaft to the left so that the hook of the chain tensioner is released from the pin of the plunger, causing the plunger to spring out and the slipper to be pushed into the chain.

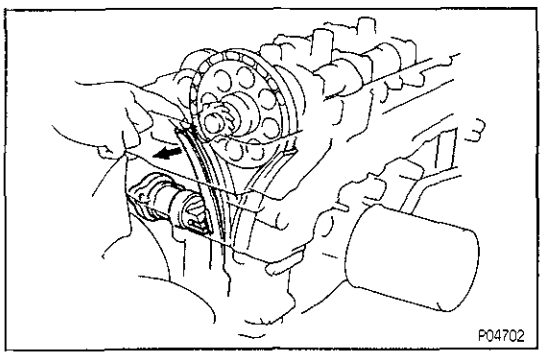

HINT: If the plunger does not spring out, press the slipper into the chain tensioner with a screwdriver or your finger so that the hook is released and the plunger springs out.

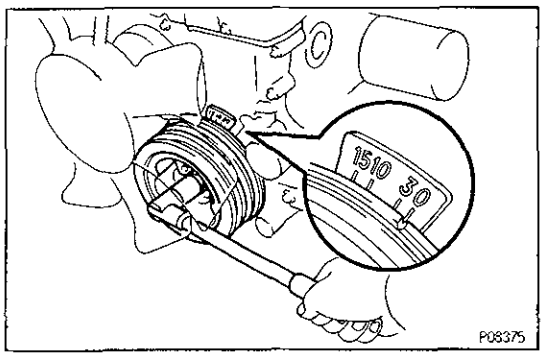

12. CHECK VALVE TIMING

(a) Turn the crankshaft pulley, and align its groove with the timimg mark "0" of the timing chain cover.
NOTICE: Always turn the crankshaft clockwise.

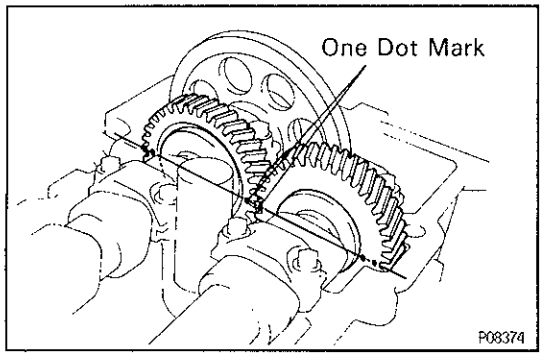

(b) Check that the timing marks (one and two dots) of the camshaft drive and driven gears are in straight line on the cylinder head surface as shown in the illustration. If not, turn the crankshaft one revolution (360°) and align the marks as above.

EG

13. CHECK AND ADJUST VALE CLEARANCE

(See steps 6 to 7 on pages EG–17 to 18)

Turn the camshaft and position the cam lobe upward and check and adjust the valve clearance.

Valve clearance (Cold):

Intake

0.15 – 0.25 mm (0.006 – 0.010 in.)

Exhaust

0.25 – 0.35 mm (0.010 – 0.014 in.)

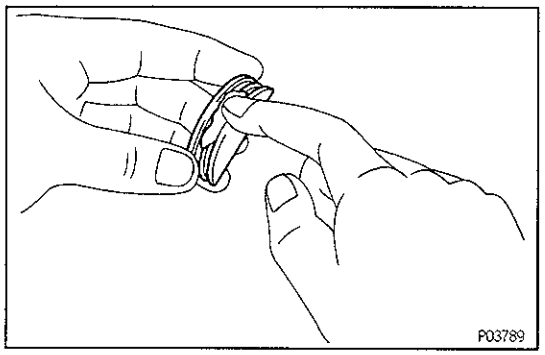

14. INSTALL SEMI–CIRCULAR PLUG

(a) Remove any old packing (FIPG) material.

(b) Apply seal packing to the cylinder head installation surface of the semi–circular plug.

Seal packing:

Part No. 08826–00080 or equivalent

(c) Install the semi–circular plug to the cylinder head.

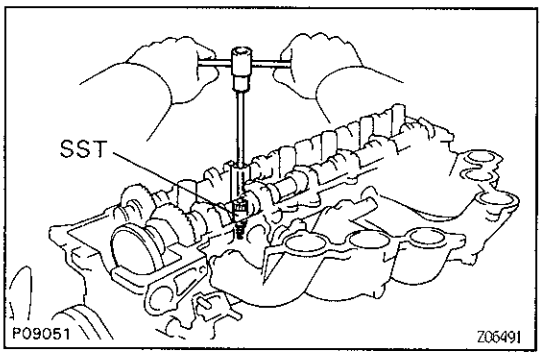

15. INSTALL SPARK PLUGS

Using SST, install the spark plug.

SST 09155–16100

Torque: 20 N·m (200 kgf·cm, 14 ft·lbf)

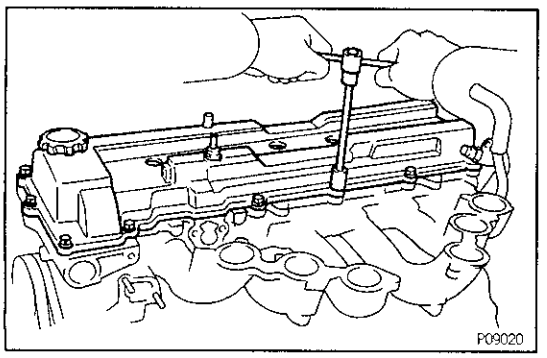

16. INSTALL CYLINDER HEAD COVER

(a) Install the gasket to the cylinder head cover.

(b) Install the cylinder head cover with the 13 bolts.

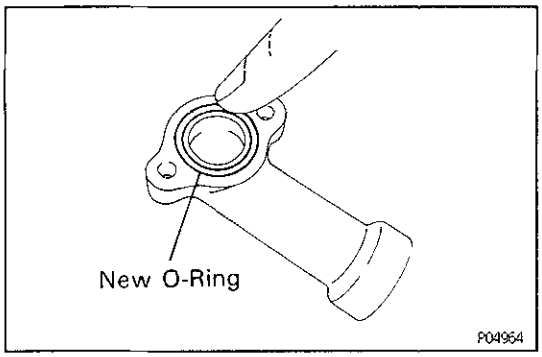

17. INSTALL WATER BY–PASS OUTLET AND PIPE

(a) Install a new O–ring to the water by–pass outlet.

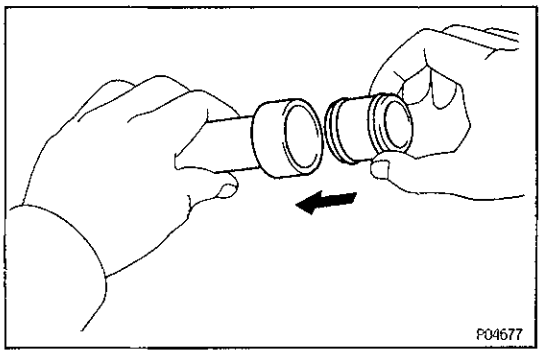

(b) Install two new O–rings to the water by–pass pipe.
(c) Apply soapy water to the O–rings.
(d) Assemble the water by–pass outlet and pipe.

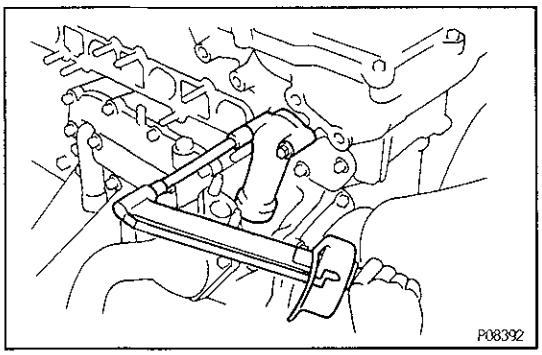

(e) Install the water by–pass outlet and pipe with the two bolts.
Torque: 21 N·m (210 kgf·cm, 15 ft·lbf)

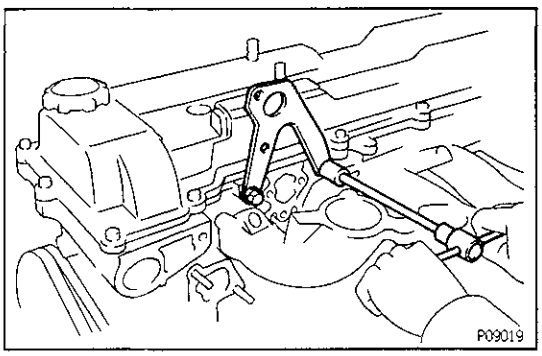

18. INSTALL NO.1 ENGINE HANGER

Install the No.1 engine hanger with the two bolts.
Torque: 41 N·m (420 kgf·cm, 30 ft·lbf)

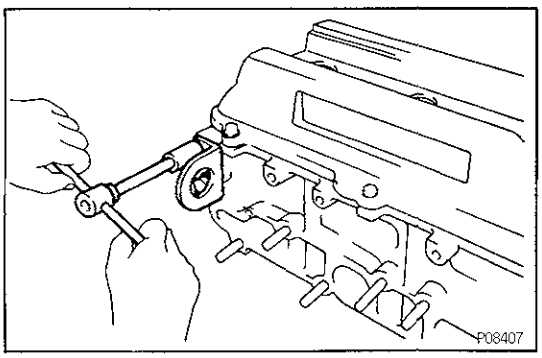

19. INSTALL NO.2 ENGINE HANGER

Install the No.2 engine hanger with the two bolts.
Torque: 41 N·m (420 kgf·cm, 30 ft·lbf)

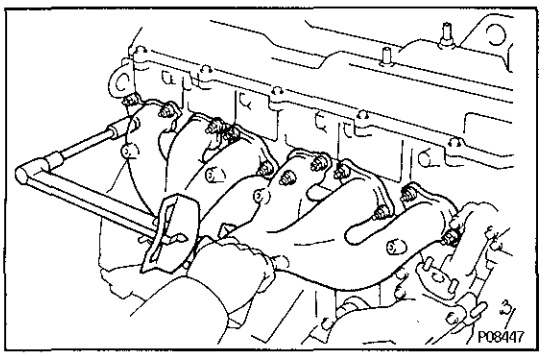

20. INSTALL NO.1 AND NO.2 EXHAUST MANIFOLDS

(a) Install two new gaskets, No.1 exhaust manifold and No.2 exhaust manifold with the 13 nuts.
Torque: 39 N·m (400 kgf·cm, 29 ft·lbf)

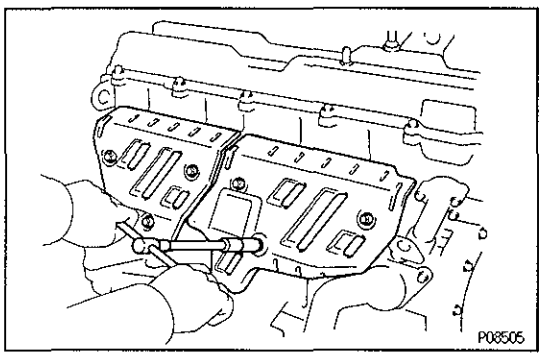

(b) Install the No.1 heat insulator and No.2 heat insulator with the six bolts.
Torque: 19 N·m (195 kgf·cm, 14 ft·lbf)

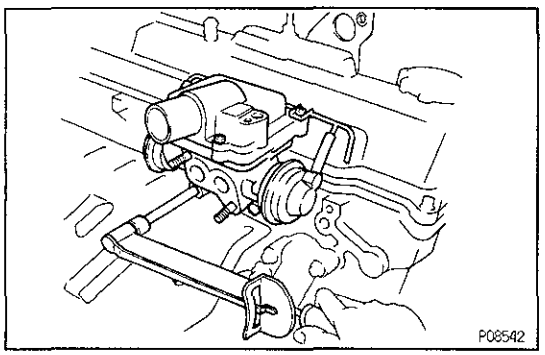

21. (Europe)
INSTALL AS REED VALVE

Install the PAIR reed valve with the two bolts.
Torque: 20 N·m (200 kgf·cm, 14 ft·lbf)

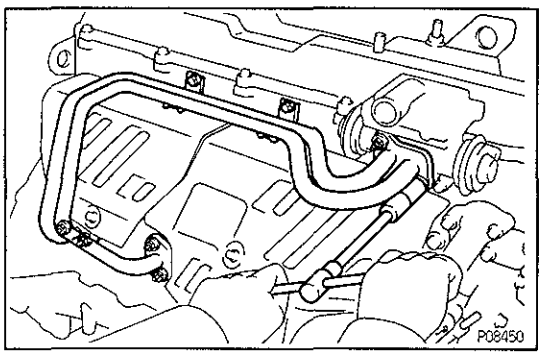

22. (Europe)
INSTALL AIR PIPE

Install three new gaskets and air pipe with the two bots and six nuts.
Torque: 20 N·m (200 kgf·cm, 14 ft·lbf) for Bolt
Torque: 21 N·m (210 kgf·cm, 15 ft·lbf) for Nut

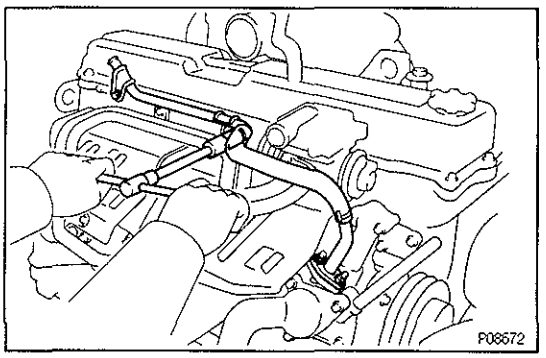

23. INSTALL HEATER PIPE

Install a new gasket and heater pipe with the two bolts and two nuts.
Torque: 20 N·m (200 kgf·cm, 14 ft·lbf) for Bolt
Torque: 21 N·m (210 kgf·cm, 15 ft·lbf) for Nut

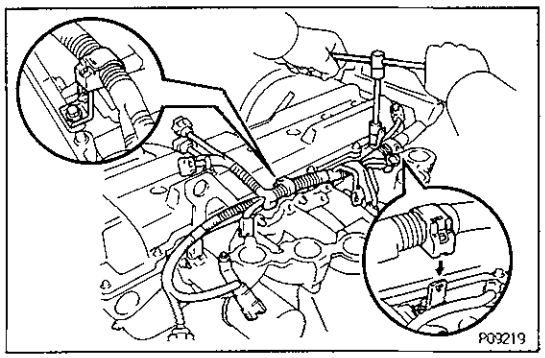

24. CONNECT ENGINE WIRE

(a) Connect the engine wire to the cylinder head and intake mamifold with the three bolts.

(b) Connect the engine wire clamp.

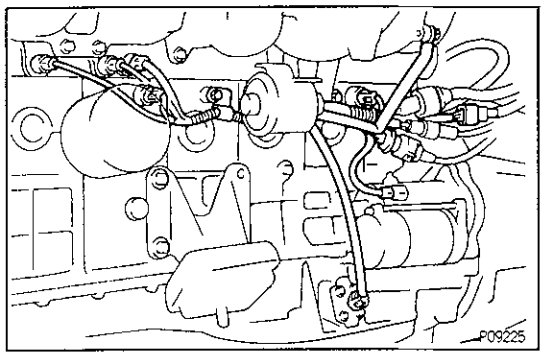

(c) Connect the engine wire to the cylinder block with the two bolts.

(d) Connect the following connectors:
- (1) Water temp. sender gauge connector
- (2) Water temp. cut switch
- (2) Water temp. sensor connector
- (4) Two knock sensor connectors
- (5) Oxygen sensor connector (with clamps)
- (6) Four connectors to transmission
- (7) Starter connector
- (8) Oil level sensor connector

(e) Connect the engine wire to the intake manifold with the bolt.

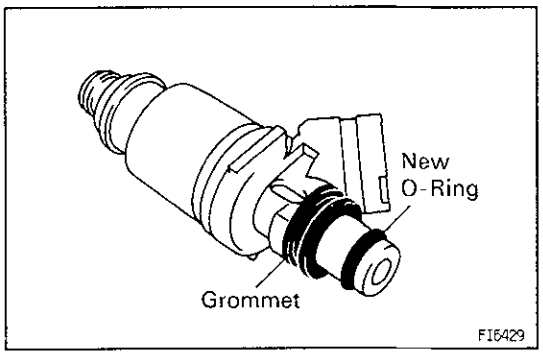

25. INSTALL INJECTORS AND DELIVERY PIPE

(a) Install a new grommet to the injector.

(b) Apply a light coat of gasoline to a new O–ring and install it to the injector.

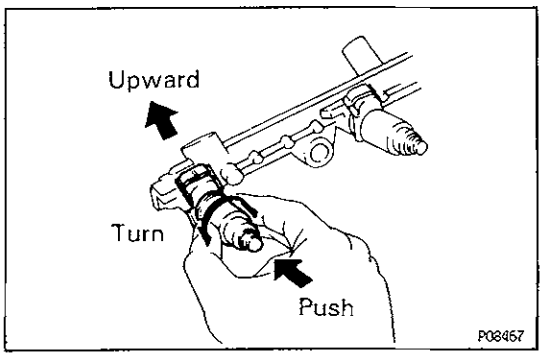

(c) While turning the injector left and right, install it to the delivery pipe. Install the six injectors.

(d) Position the injector connector upward.

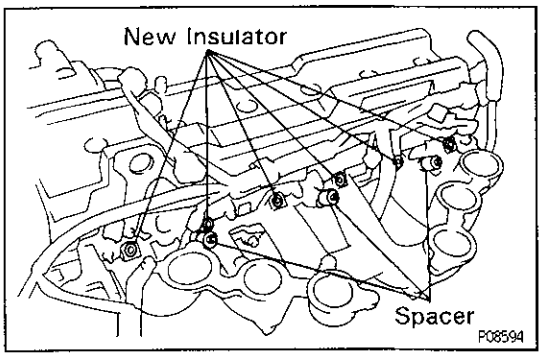

(e) Place six new insulators and the three spacers in position on the intake manifold.

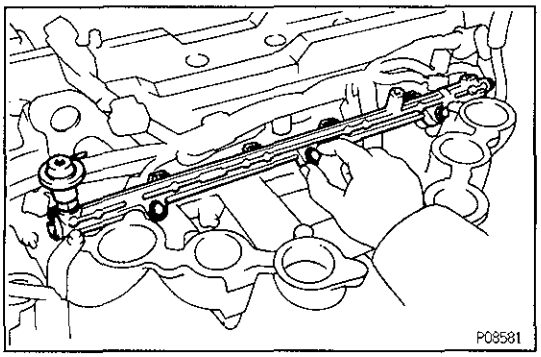

(f) Place the six injectors together with the delivery pipe in position on the intake manifold.

(g) Temporarily install the three bolts holding the delivery pipe to the intake manifold.

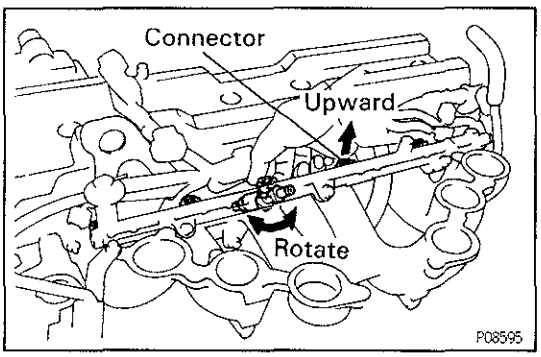

(h) Check that the injectors rotate smoothly.
HINT: If injectors do not rotate smoothly, the probable cause is incorrect installation of O–rings. Replace the O–rings.

(i) Position the injector connector upward.

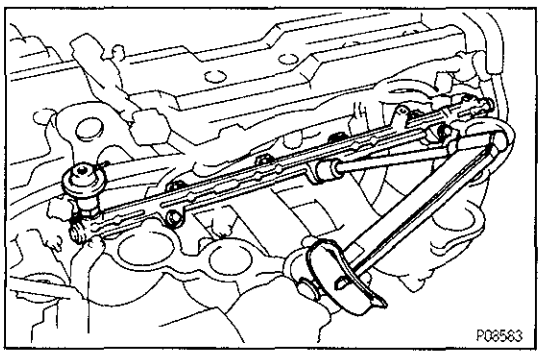

(j) Tighten the three bolts holding the delivery pipe to the intake manifold.
Torque: 21 N·m (210 kgf·cm, 15 ft·lbf)

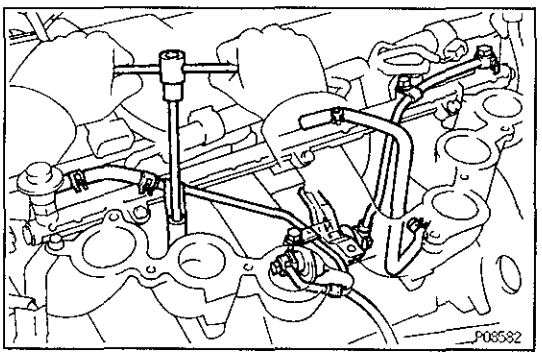

26. CONNECT FUEL INLET HOSE
Connect the fuel inlet hose to the fuel filter with two new gaskets and union bolt.
Torque: 29 N·m (300 kgf·cm, 22 ft·lbf)

27. INSTALL NO.1 FUEL PIPE
Install the No.1 fuel pipe with four new gaskets, the two union bolts and bolt.
Torque: 29 N·m (300 kgf·cm, 22 ft·lbf) for Union bolt
Torque: 20 N·m (200 kgf·cm, 14 ft·lbf) for Bolt

28. INSTALL NO.1 WATER BY–PASS HOSE

29. INSTALL FUEL RETURN PIPE

(a) Install the fuel return pipe with the two bolts.
Torque: 20 N·m (200 kgf·cm, 14 ft·lbf)

(b) Connect the fuel hose to the fuel pressure regulator.

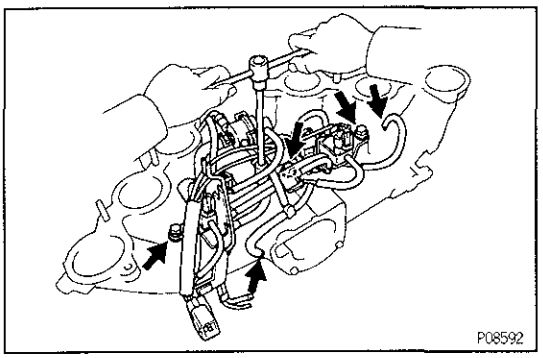

30. INSTALL AIR INTAKE CHAMBER

(a) Install the emission control valve set assembly to the air intake chamber with the four bolts.
Torque: 20 N·m (200 kgf·cm, 14 ft·lbf)

(b) Connect the air hose.

(c) Connect the vacuum hose.

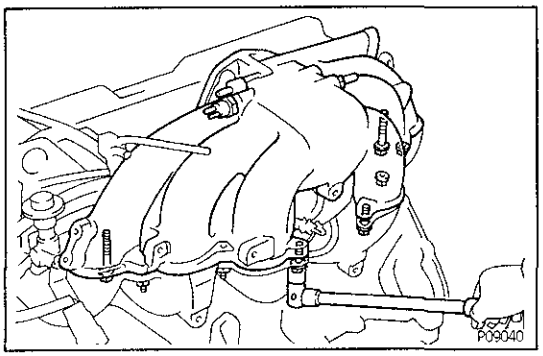

(d) Install two new gaskets and the air intake chamber with the four bolts and six nuts.
Torque: 21 N·m (210 kgf·cm, 15 ft·lbf)

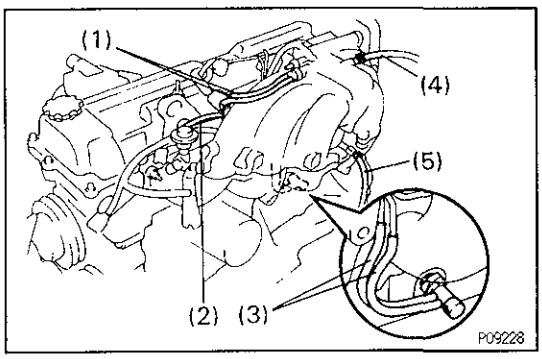

(e) Connect the following hoses:
(1) Two vacuum hoses to gas filter
(2) Vacuum hose to fuel pressure regulator
(3) Two vacuum hoses to BVSV
(4) EVAP hose to 3–way
(5) Brake booster hose to brake booster union

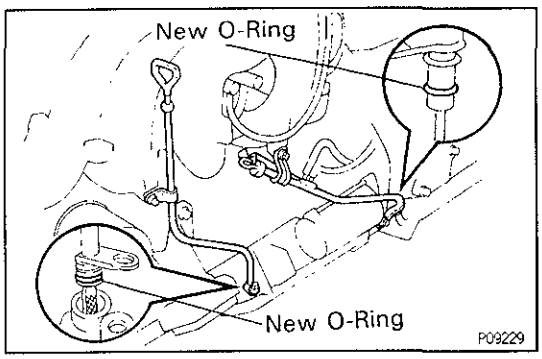

31. INSTALL OIL DIPSTICKS AND GUIDES FOR ENGINE AND TRANSMISSION

(a) Install a new O–ring to the dipstick guide.

(b) Apply light coat of engine oil on the O–ring.

(c) Push in the dipstick guide into the guide hole of the oil pan.

(d) Install the dipstick guide with the two bolts.
Torque: 20 N·m (200 kgf·cm, 14 ft·lbf)

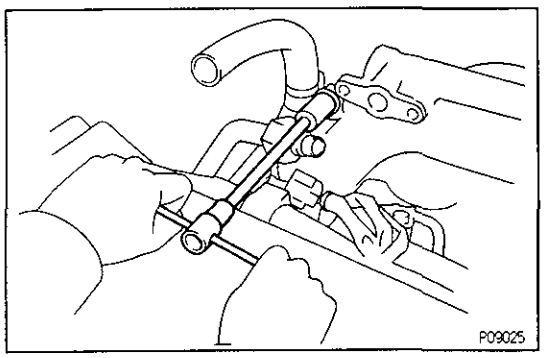

32. INSTALL BOLT HOLDING HEATER INLET PIPE AND AIR INTAKE CHAMBER
Torque: 20 N·m (200 kgf·cm, 14 ft·lbf)

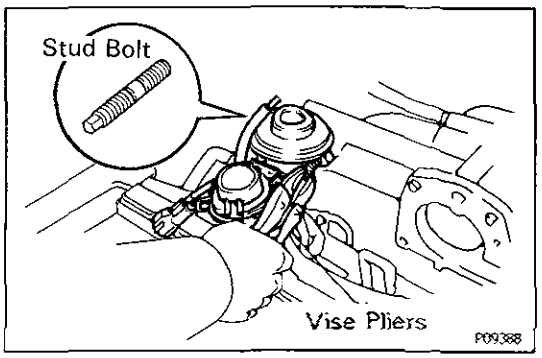

33. (Europe)
INSTALL EGR VALVE AND VACUUM MODULATOR

(a) Using vise pliers, temporarily install a new gasket, and EGR valve and vacumm modulator assembly with the two stud bolts.
Torque: 10 N·m (105 kgf·cm, 8 ft·lbf)

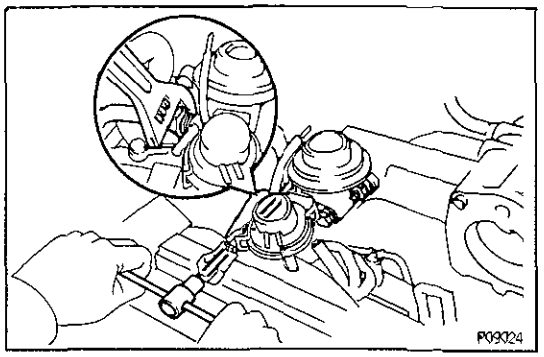

(b) Install the two nuts holding the EGR valve and air intake chamber.
Torque: 19 N·m (195 kgf·cm, 14 ft·lbf)

(c) Tighten the union nut of the EGR pipe.
Torque: 64 N·m (650 kgf·cm, 47 ft·lbf)

(d) Connect the vacuum hose to the EGR valve.

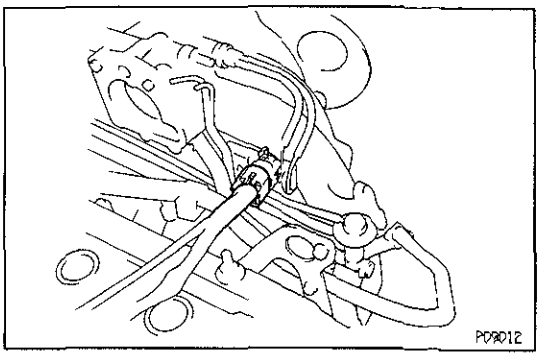

34. CONNECT CONNECTOR FOR EMISSION CONTROL VALVE SET ASSEMBLY

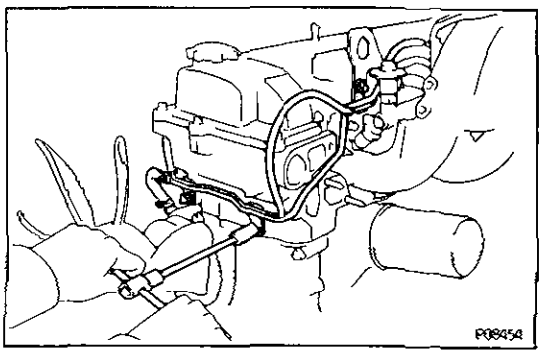

35. INSTALL NO.2 WATER BY—PASS PIPE AND HOSES

(a) Install the No.2 water by—pass pipe and hoses with the three bolts.
Torque: 20 N·m (200 kgf·cm, 14 ft·lbf)

(b) Connect the water hose to the timing chain cover.

(c) Connect the two vacuum hose to the PAIR reed valve and No.2 emission control valve set.

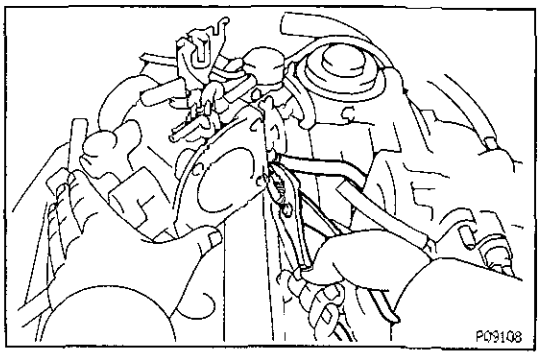

36. INSTALL THROTTLE BODY

(a) Connect the No.1 water by—pass hose to the throttle body.

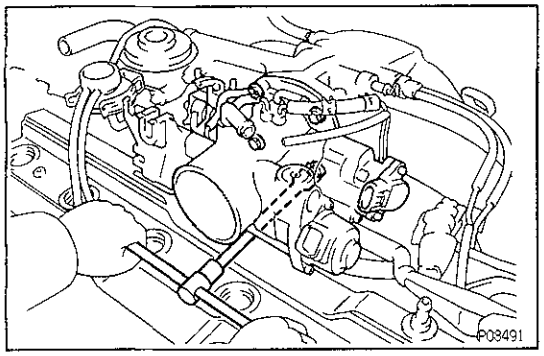

(b) Install a new gasket and throttle body with the four bolts.
Torque: 21 N·m (210 kgf·cm, 15 ft·lbf)

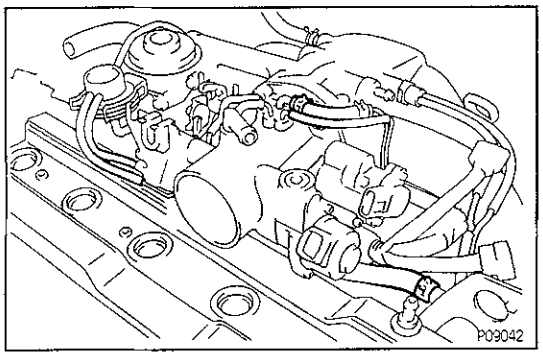

(c) Connect the water hose to the No.2 water by–pass pipe.
(d) Connect the EVAP hose.
(e) Connect the three vacuum hoses.

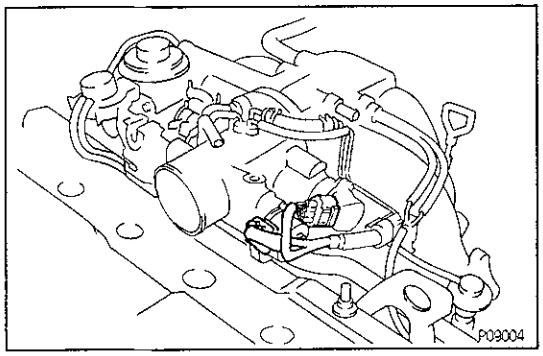

(f) Connect the ISC valve connector.
(g) Connect the throttle position sensor connector.

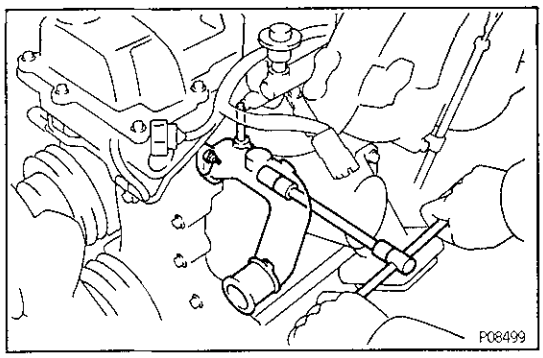

37. INSTALL WATER OUTLET
(a) Install a new gasket and water outlet with the two nuts.
Torque: 21 N·m (210 kgf·cm, 15 ft·lbf)
(b) Connect the No.3 water by–pass hose.
(c) Connect the radiator inlet hose.

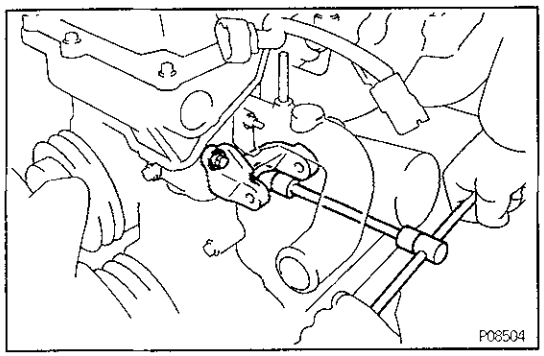

38. INSTALL ALTERNATOR BRACKET
Install the generator bracket with the two bolts.
Torque: 43 N·m (440 kgf·cm, 32 ft·lbf)

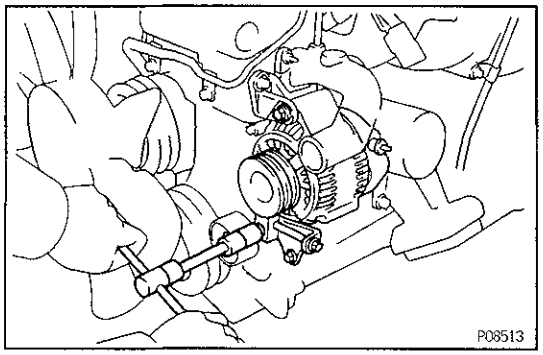

39. INSTALL ALTERNATOR AND DRIVE BELTS
(See CH section)

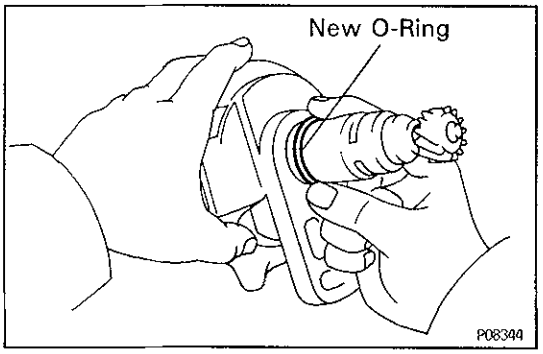

40. INSTALL DISTRIBUTOR

(a) Install a new O–ring to the distributor.
HINT: Always use a new O–ring when installing the distributor.

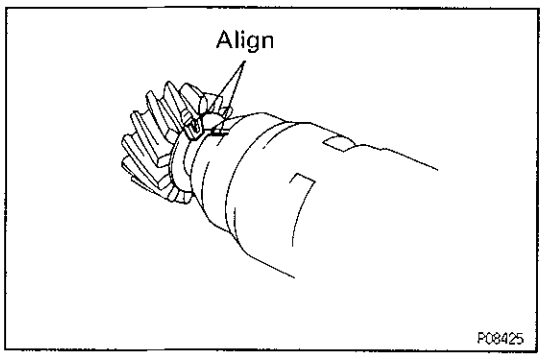

(b) Align the groove of the distributor housing with the protrusion on the driven gear.
(c) Apply a light coat of engine oil on the O–ring.

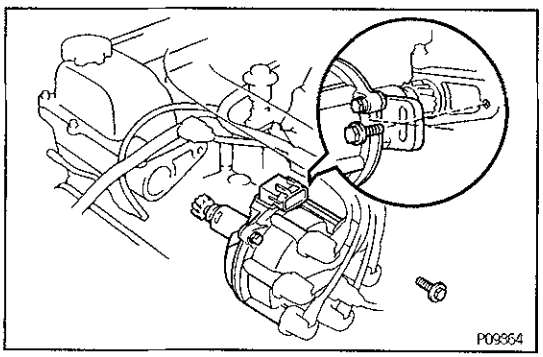

(d) Insert the distributor, aligning the center of the flange with that of the bolt hole on the cylinder head.
(e) Lightly tighten the hold–down bolt.
(f) Connect the high–tension cords.
Firing order:
1 – 5 – 3 – 6 – 2 – 4

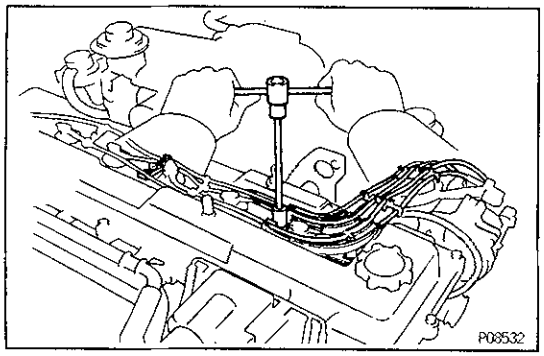

(g) Install the No. 1 and No. 2 cord clamps with two mounting bolts.

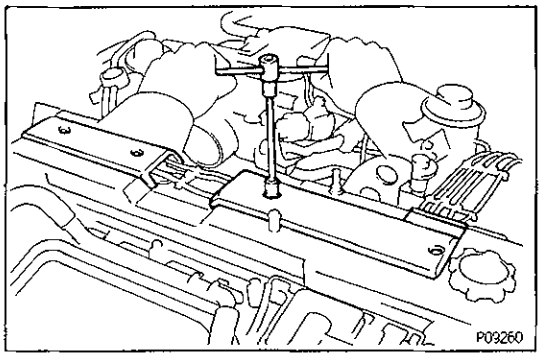

41. INSTALL NO.2 AND NO.3 CYLINDER HEAD COVERS

Install the head covers with the four bolts.

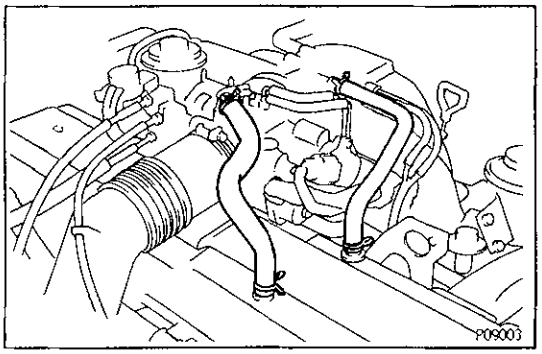

42. INSTALL NO.1 AND NO.2 PCV HOSES