FUEL PUMP

SYSTEM CIRCUIT

EG0CY-09

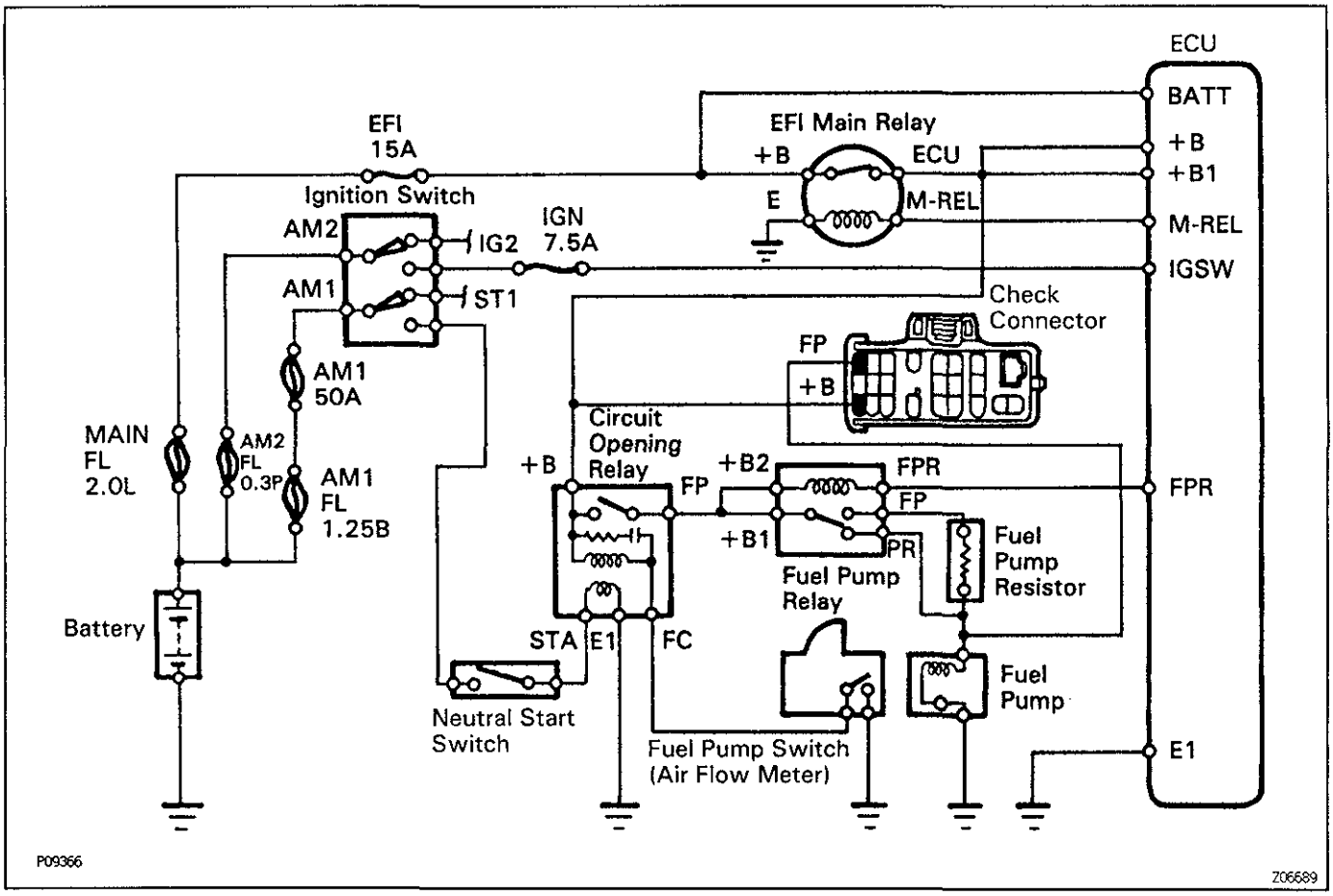

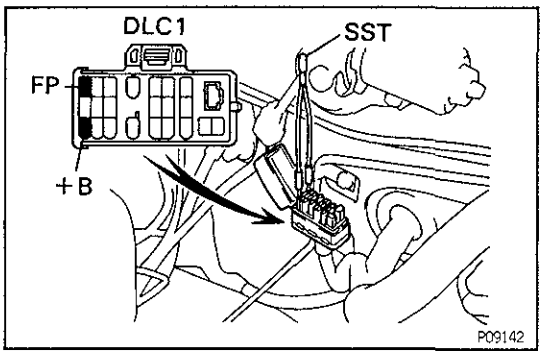

ON–VEHICLE INSPECTION

EG1A5-04

1. CHECK FUEL PUMP OPERATION

(a) Using SST, connect terminals +B and FP of the check connector.
SST 09843–18020

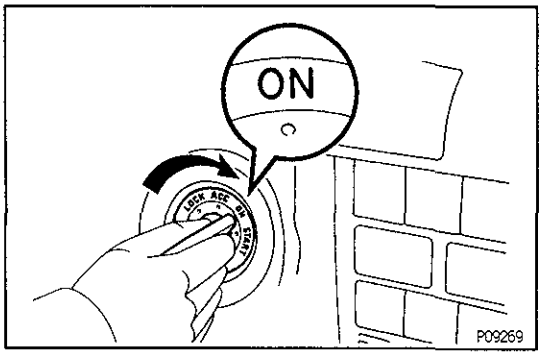

(b) Turn the ignition switch ON.
NOTICE: Do not start the engine.

EG

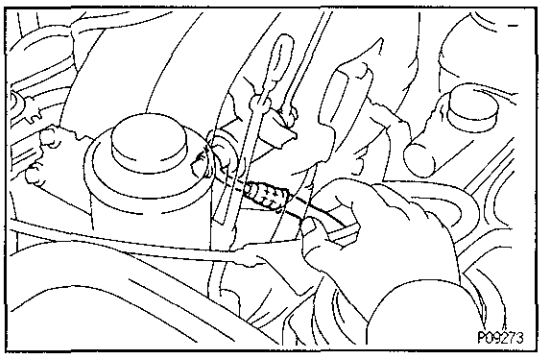

(c) Check that there is pressure in the hose from the fuel filter.
HINT: At this time, you will hear fuel return noise.
If there is no pressure, check the following parts:
- Fusible links (MAIN 2.0L, AM2 0.3P)
- Fuses (EFI 15A, IGN 7.5A)
- EFI main relay
- Fuel pump
- ECU
- Wiring connections

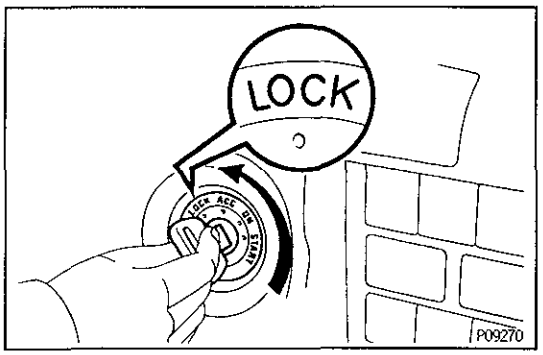

(d) Turn the ignition switch OFF.
(e) Remove SST.
SST 09843–18020

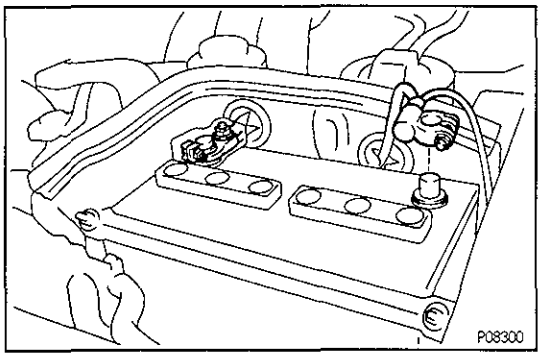

2. CHECK FUEL PRESSURE
(a) Check that the battery voltages is above 12 volts.
(b) Disconnect the cable from the negative (–) terminal of the battery.

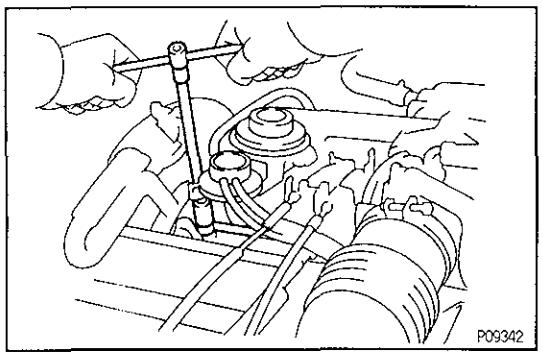

(c) Remove the union bolt and two gaskets, and disconnect the No.1 fuel pipe from the delivery pipe.
HINT:
- Put a suitable container or shop towel under the delivery pipe.
- Slowly loosen the union bolt.

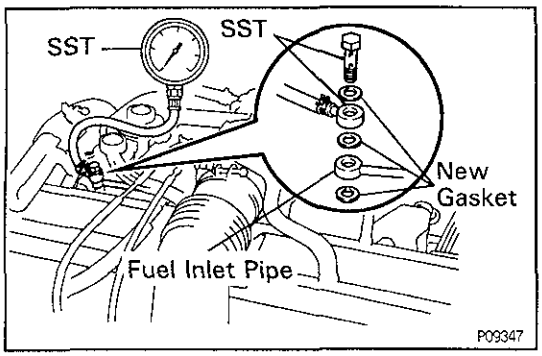

(d) Install the No.1 fuel pipe and SST (pressure gauge) to the delivery pipe with three new gaskets and SST (union bolt).
SST 09268–45012
Torque: 29 N·m (300 kgf·cm, 22 ft·lbf)
(e) Wipe off any splattered gasoline.

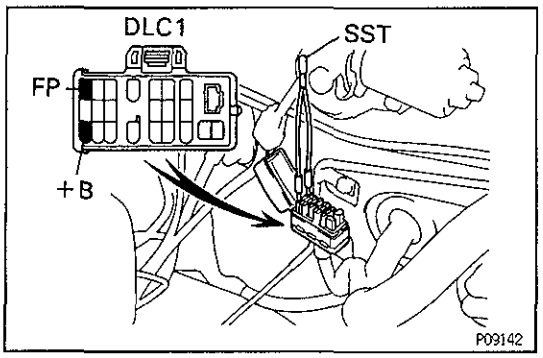

(f) Using SST, connect terminals +B and FP of the check connector.
SST 09843–18020

(g) Reconnect the battery negative (–) cable.

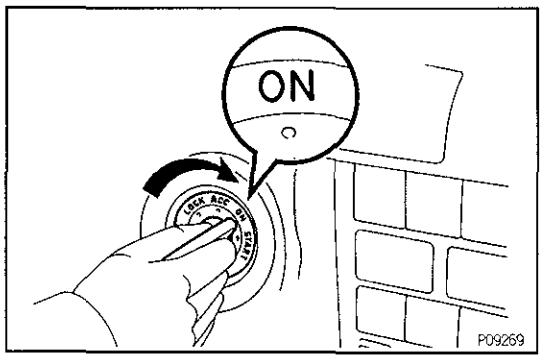

(h) Turn the ignition switch ON.

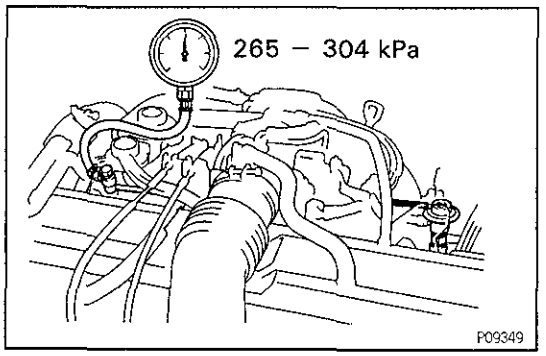

(i) Measure the fuel pressure.
Fuel pressure:
265–304 kPa (2.7–3.1 kgf/cm², 38–44 psi)
If pressure is high, replace the fuel pressure regulator.
If pressure is low, check the following parts:
- Fuel hoses and connections
- Fuel pump
- Fuel filter
- Fuel pressure regulator
- Fuel pume relay
- Fuel pump resistor
- Injectors

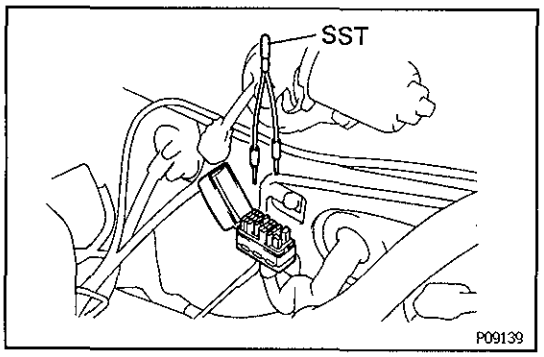

(j) Remove SST from the check connector.
SST 09843–18020

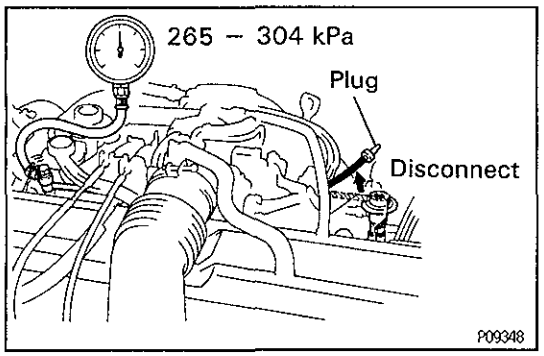

(k) Start the engine.
(l) Disconnect the vacuum sensing hose from the fuel pressure regulator, and plug the hose end.
(m) Measure the fuel pressure at idle.
Fuel pressure:
265–304 kPa (2.7–3.1 kgf/cm², 38–44 psi)

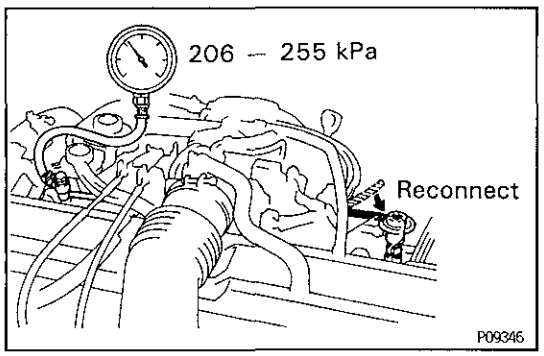

(n) Reconnect the vacuum sensing hose to the fuel pressure regulator.
(o) Measure the fuel pressure at idle.
Fuel pressure:
206–255 kPa (2.1–2.6 kgf/cm², 31–37 psi)
If pressure is not as specified, check the vacuum sensing hose and fuel pressure regulator.
(p) Stop the engine.

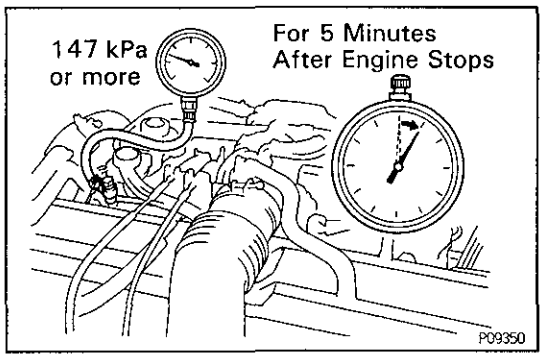

(q) Check that the fuel pressure remains as specified for 5 minutes after the engine is stops.
Fuel pressure:
147 kPa (1.5 kgf/cm², 21 psi) or more
If pressure is not as specified, check the fuel pump, pressure regulator and/or injector.
(r) After checking fuel pressure, disconnect the battery negative (–) cable and carefully remove SST to prevent gasoline from splashing.
SST 09268–45012

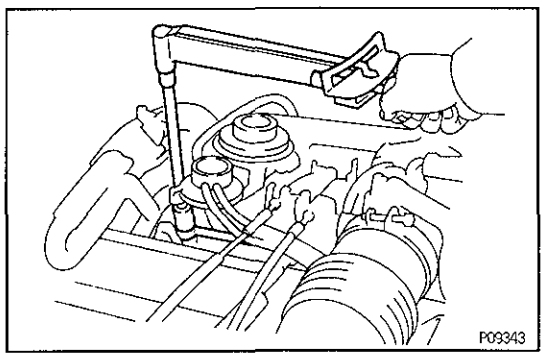

(s) Reconnect the No.1 fuel pipe to the delivery pipe with two new gaskets and the union bolt.
Torque: 29 N·m (300 kgf·cm, 22 ft·lbf)

(t) Reconnect the cable to the negative (–) terminal of the battery.
(u) Check for fuel leakage.

EG27V-01

FUEL PUMP INSPECTION

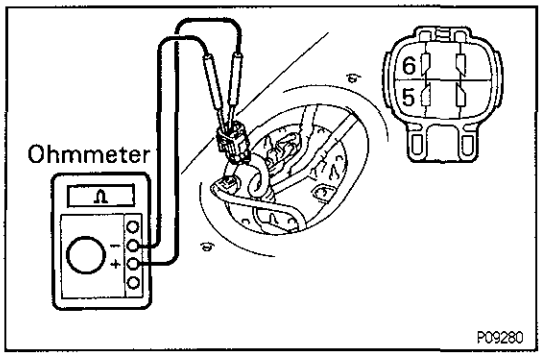

A. Inspect fuel pump resistance

Using an ohmmeter, measure the resistance between the terminals 5 and 6.

Resistance (Cold):

0.2 – 3.0 Ω

If the resistance is not as specified, replace the fuel pump.

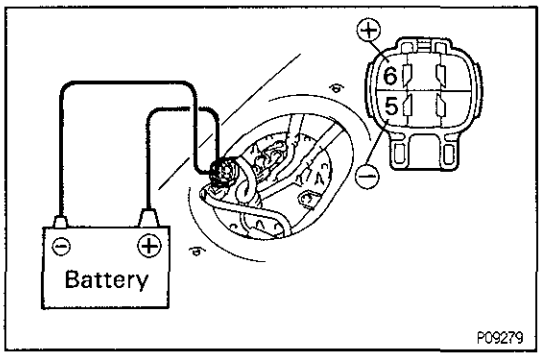

B. Inspect fuel pump operation

Connect the positive (+) lead from the battery to terminal 6 of the connector, and the negative (–) lead to terminal 5. Check that the fuel pump operates.

NOTICE:

- **These tests must be performed quickly (within 10 seconds) to prevent the coil from burning out.**
- **Keep the fuel pump as far away from the battery as possible.**
- **Always perform switching at the battery side.**

If operation is not as specified, replace the fuel pump.

EG

COMPONENTS FOR DISASSEMBLY AND ASSEMBLY

EG0D1-07

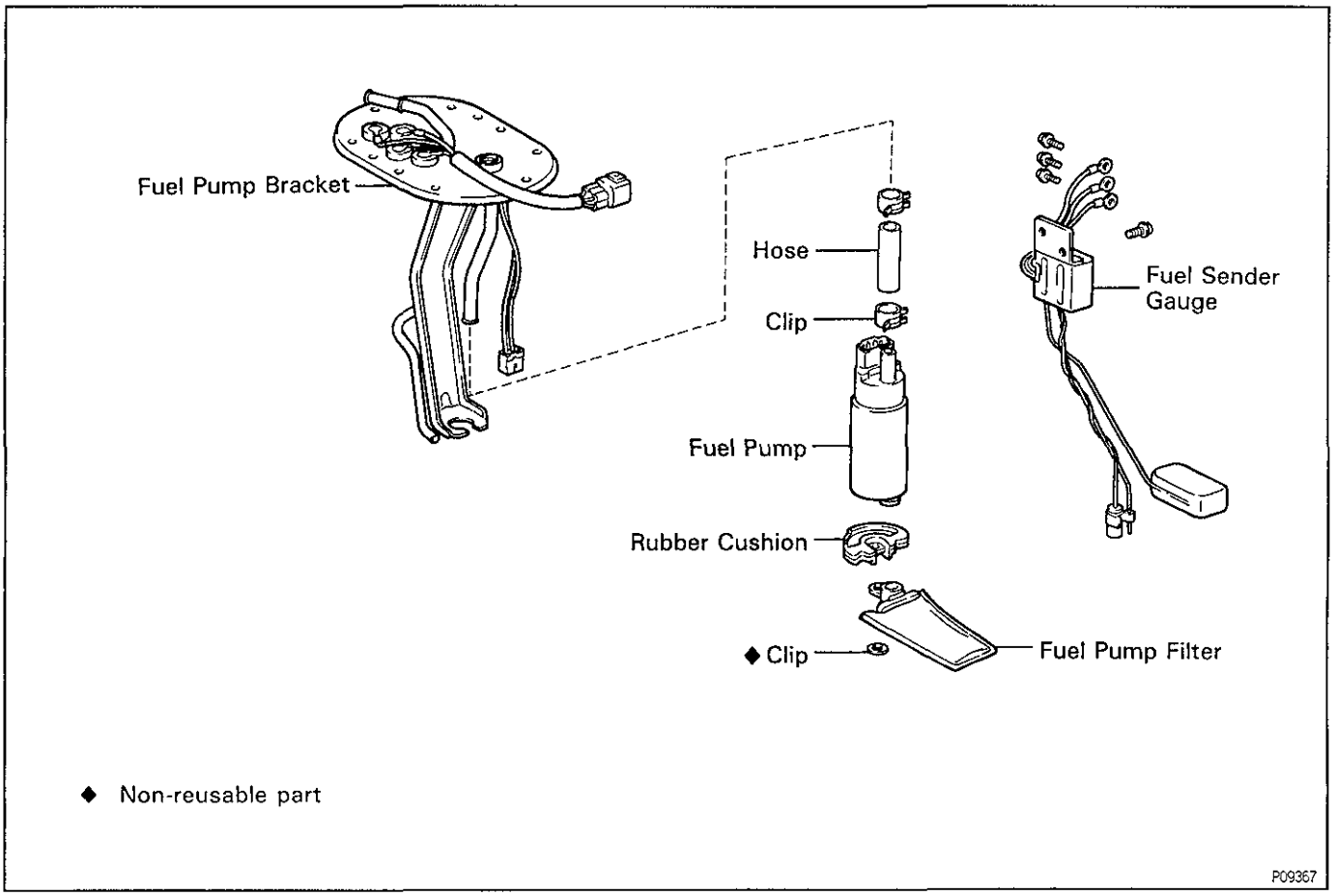

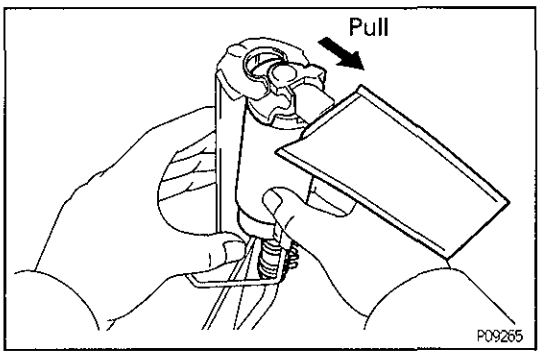

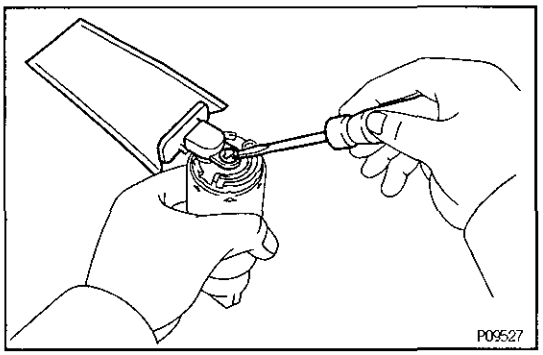

FUEL PUMP DISASSEMBLY

EG18E-01

1. REMOVE FUEL PUMP FROM FUEL PUMP BRACKET

(a) Pull off the lower side of the fuel pump from the pump bracket.
(b) Disconnect the fuel pump connector.
(c) Disconnect the fuel hose from the fuel pump, and remove tthe fuel pump.
(d) Remove the rubber cushion from the fuel pump.

2. REMOVE FUEL PUMP FILTER FROM FUEL PUMP

(a) Using a small screwdriver, remove the clip.
(b) Pull out the pump filter.

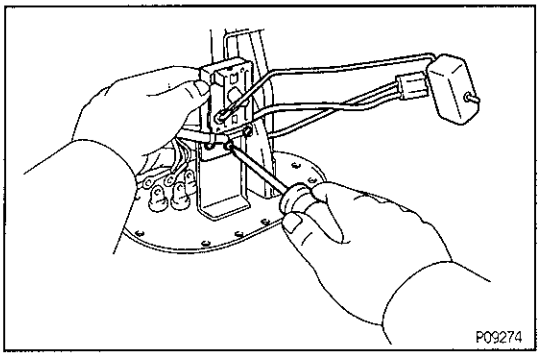

3. REMOVE FUEL SENDER GAUGE FROM FUEL PUMP BRACKET

(a) Remove the three screws and diconnect the lead wires from the pump bracket.

(b) Remove the three screws and sender gauge.

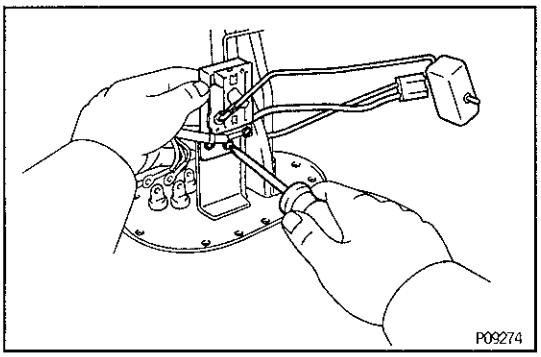

FUEL PUMP ASSEMBLY

EG0D3-06

1. INSTALL FUEL SENDER GAUGE TO FUEL PUMP BRACKET

(a) Install the sender gauge with the three screws.

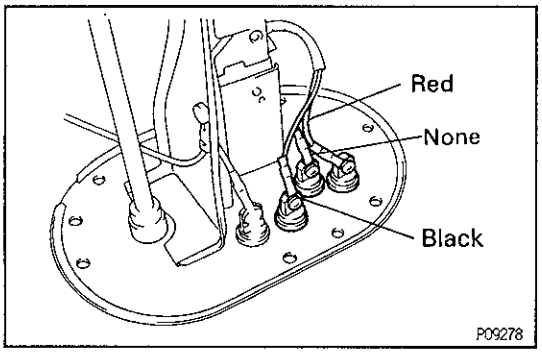

(b) Connect the three lead wires to the pump bracket with the screws as shown.

2. INSTALL FUEL PUMP FILTER TO FUEL PUMP

Install the pump filter with a new clip.

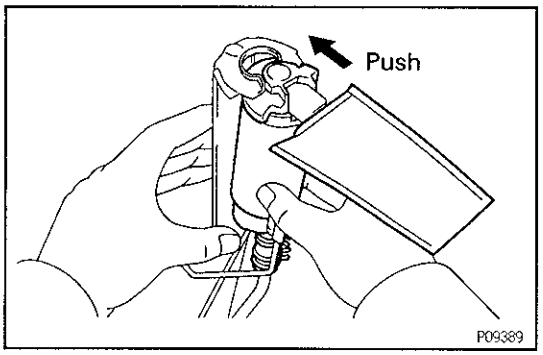

3. INSTALL FUEL PUMP TO FUEL PUMP BRACKET

(a) Install the rubber cushion to the fuel pump.

(b) Connect the fuel hose to the outlet port of the fuel pump.

(c) Install the fuel pump connector.

(d) Install the fuel pump by pushing the lower side of the fuel pump.